U.S. DEPARTMENT OF TRANSPORTATION
FEDERAL AVIATION ADMINISTRATION

Air Traffic Organization Policy

ORDER
JO 6580.3B

Effective Date:
12/28/2007

SUBJ: Remote Communications Facilities Installation Standards Handbook

This order provides guidance and reference material to be used in the installation of remote communications facilities, i.e., air-to-ground radio communications facilities, in support of the Capital Investment Plan.

This order also outlines the orderly approach leading to the establishment, relocation, and upgrade of remote communications facilities. Every effort was made to consider those activities required with tasks to be completed first, followed with tasks to be completed in a finished operational remote communications facility.

The expected results of establishing a complete standards guide to be followed by all service areas includes cost avoidance through: (1) improved grounding and bonding requirements; (2) reduced maintenance travel and staff time; and (3) reduced retrofitting for implementation of modern equipment.

An earnest attempt was made to include all related information needed to establish or improve remote communications facilities. Ideas to enhance or expand the handbook to be a more useful and beneficial tool are greatly appreciated. Additional information which only those persons with direct hands-on experience can provide should be conveyed to AJW-56 by calling (202) 493-4822 or writing to the Air/Ground Communication Solution Implementation Group, AJW-56, 800 Independence Avenue SW, Washington DC 20591.

Steve Zaidman
Vice President, Technical Operations Services

Distribution: A-W(ND/RN/OS)-2; A-X(AF)-2; A-FAF-0 (LTD); AMC-1, AML-1, AMA-1, AJP-7 (2 Copies Each)

Initiated By: AJW-56

TABLE OF CONTENTS

	Page No.
CHAPTER 1. GENERAL	1
1. Purpose	1
2. Distribution	1
3. Cancellation	1
4. Background	1
5. Philosophy	2
6. Site Criteria	3
7.-12. Reserved	3
CHARTER 2. REMOTE COMMUNICATION FACILITIES	
SECTION 1. GENERAL	4
13. Remote Communication Facilities Operation	4
Figure 2-1 NAS Air/Ground Communications Infrastructure	5
Figure 2-2 ATCT and Ancillary Facilities	6
Figure 2-3 En Route National RCAG System Major Facilities	9
14. Automated Terminal Information System	10
Figure 2-4 ARTCC and Ancillary Facilities	11
15. Enroute Flight Advisory System	12
16. Interfacility Communication System	12
17.-21. Reserved	12
SECTION 2. FUNCTIONAL EQUIPMENT DESCRIPTION	13
22. General	13
23. Transmitter System	13
24. Receiver System	14
Figure 2-5. RCF and Control Facilities	15
25. Antenna System	16
26. Remote Maintenance Monitoring	16
27. Emergency Communications	17
Figure 2-6. Block Diagram Remote Maintenance Monitoring	18
28.-32. Reserved	19
Figure 2-7 ARTCC A/G Communications System Redundancy	20

Page No.

SECTION 3. EQUIPMENT DESCRIPTION 21

33. General 21
34. VHF Transmitters 21
35. UHF Transmitters 22
36. VHF Receivers 22
37. UHF Receivers 22
38. Reserved 22
39. Remote Control System 22
40. Antennas 24
41. Multicouplers 24
42. Coaxial RF Line Sections 24
43. Combiners 24
44. Isolators 25
45. Filters 25
46. Transmission Line 25
47. Equipment Racks 25
48.-51. Reserved 26

SECTION 4. SITE CHARACTERISTICS 27

52. General 27
53. Stand-Alone RCF 27
54. Collocated RCF 27
55. Building Floor Plans 28
Figure 2-8. Stand-Alone RCF Site Layout 29
Figure 2-9. Typical Antenna Pole Mounting 30
Figure 2-10. Typical Integral RCF/VORTAC Antenna Mounting 31
Figure 2-11. Typical Floor Plan With Racks 32
Figure 2-12. Typical RCF/RCAG Floor Plan W/Racks 33
Figure 2-13. Typical RCF/RTR Floor Plan W/Racks 34
Figure 2-14. RCF/VORTAC Collocated in a 21′ Diameter Building 36
Figure 2-15. RCF/VORTAC Collocated in a 20′ x 36′ Building 37
Figure 2-16. RCF/VORTAC Collocated in a 25′ x 31′ Building 38
Figure 2-17. RCF/VORTAC Collocated in a 32′ Diameter Building 39
Figure 2-18. RCF/VORTAC Collocated in a 36′ x 36′ Building 40
Figure 2-19. Future RCF/VORTAC Facility 41
Figure 2-20. RCF/RCL Collocated in a 14′ x 26′ Building 42
56.-60. Reserved 43
Figure 2-21. Small 10′ x 14′ RCL Building 44

Page No.

CHAPTER 3. MANAGEMENT OF RCF 45

SECTION 1. ADMINISTRATIVE 45

61. General 45
62. Notices to Airmen 45
63. Planning 45
64. Tasks 47
65.-69. Reserved 48

SECTION 2. TECHNICAL 49

70. General 49
71. Design Considerations 49
Table 3-1. Typical Electrical Parameters For Earth and Water 52
Figure 3-1. Typical Average Ambient Noise Level 54
72. Installation 55
73. Testing and Evaluation 57
74.-78. Reserved 57

CHAPTER 4. GROUNDING & LIGHTNING PROTECTION 58

SECTION 1. GENERAL REQUIREMENTS 58

79. Grounding System 58
80. Grounding System Terminology 58
81. Grounding System Descriptions 59
Figure 4-1. Typical Facility Grounding System 61
82. EMI 62
83. Transient Protection 62
84.-87. Reserved 62

SECTION 2. EARTH ELECTRODE SYSTEM 63

88. General 63
89. Environmental Conditions Evaluation 63
90. Earth Resistance 63
91. Design Parameters 64
Figure 4-2. Change in Resistance vs Number And Spacing of Rods 67
92. Installation 68
Figure 4-4a. Typical RCF Earth Electrode System 70
Figure 4-4b. Typical RCF Earth Electrode System 71
Figure 4-5. Exothermic Welding Process 72
Figure 4-6. Ground Rod Welds 73
Figure 4-7. Details of Ground Rod/Inter-Connecting Cable Installation 74
Figure 4-8. Grounding Access Well Construction 75

Page No.

Figure 4-9. Connection to Earth Electrode System 77
Figure 4-10. Tower and Structure Surface Ground Plane System In Poor Conduction Soil 79
93. Main Ground Plate 81
94. Main Ground Plate Installation 81
Figure 4-11. Trench Method of Soil Treatment 82
Figure 4-12. Alternate Method of Soil Treatment 83
Table 4-1. RCF Earth Electrode System Installation Materials 84
Figure 4-13. Main Ground Plate Installation 85
Table 4-2. New Installation Junction Box, Main Ground Plate 86
95.-98. Reserved 87

SECTION 3. LIGHTNING PROTECTION SYSTEM 88

99. Requirements 88
Figure 4-14. Lightning Protection for Antenna Platforms 89
Figure 4-15. Determining Air Terminals for Buildings Under 50 Feet Tall 90
Figure 4-16. Determining Air Terminals for Towers 91
Figure 4-17. Air Terminal Protection of Flat Surfaces 92
100. Installation 93
Figure 4-18a. Antenna Tower Grounding and Lightning Protection 94
Figure 4-18b. Antenna Tower Grounding and Lightning Protection 95
Figure 4-19. Guyed Tower Grounding and Lightning Protection 96
101.-104. Reserved 97
105. Reserved 98
Figure 4-20a. Typical Antenna Tower Coaxial Cable and Junction Box Grounding 99
Figure 4-20b. Typical Antenna Tower Coaxial Cable and Junction Box Grounding 100
Figure 4-21. Typical Coaxial Cable Bulkhead Plate 101
Figure 4-22. Typical Cable Grounding in Antenna Patch Panel 102

Figure 4-23. Lightning Protection for Underground Cables 103

SECTION 4. MULTIPOINT GROUND SYSTEM 104

Page No.

106. Requirements 104
107. Installation 104
Figure 4-24. Multipoint Ground Plate 105
Figure 4-25. Multipoint Ground Installation 106

108.-112. Reserved 107
Figure 4-26. Main AC Service Ground Bolted Connection 108

SECTION 5. ELECTRONIC SINGLE POINT GROUND SYSTEM 109

113. Requirements 109
114. Installation 109
Figure 4-27. Single Point Ground Plate 110
Figure 4-28. Single Point Ground Installation 111
115.-119. Reserved 112

SECTION 6. TRANSIENT AND SURGE PROTECTION SYSTEM 113

120. Requirements 113
121. AC Power Protection 113
Figure 4-29. Single Phase AC Power Surge Arrester Installation 115
Figure 4-30. Three Phase AC Power Surge Arrester Installation 116
Table 4-4. Materials for AC Power Surge Arrester Installation 117
122. Transmitter/Receiver Protection 118
123. Landline Protection 118
Figure 4-31a. Coaxial Transient Suppressor Mounting 120
Figure 4-31b. Coaxial Transient Suppressor Mounting 121
Figure 4-32. Landline Protector Circuit Assembly Installation 122
Table 4-5. Existing Installation Lightning Protection Circuits Material 123
Table 4-6. New Installation Lightning Protection Circuits Material 125
Figure 4-33. Landline Lightning Protection Installation 126
Figure 4-34. Landline Junction Box Installation 127

124. Additional Landline Protection 128
Figure 4-35. PTC-2 Resetable Fuse Link 131
Figure 4-36. Solid State Circuits 133
Figure 4-37. Switches 135
Figure 4-38. Primary and Secondary Telco 138

125. Reserved 140

Page No.

SECTION 7. TESTING 141

126. Criteria 141
127. Earth Electrode System 141

Figure 4-39. Earth Resistance Tester 143

128. Lightning Protection System 144
129. Multipoint Ground System 147
130. Single Point Ground System 147
131.-135. Reserved 148

CHAPTER 5. POWER DISTRIBUTION SYSTEM 149

SECTION 1. GENERAL 149

136. General Power Systems 149
Table 5-1. General AC Load Center Power/ System Characteristics 150

SECTION 2. AC POWER 151

137. General 151
138. AC Power Distribution 151
139. Grounding Requirements 151
Figure 5-1. Simplified AC Power Distribution System 153
140. AC Panelboard 155
Figure 5-2. Main AC Service Ground Bolted Connection 156
Figure 5-3. Typical Reconfigured RCF Single Phase AC Power Panelboard 157
Figure 5-4. Typical Reconfigured RCF Three Phase AC Power Panelboard 158
141. Wiring 159
142.-145. Reserved 159

SECTION 3. DC POWER SYSTEM 160

146. General 160
147. DC Power Distribution 160
Figure 5-5. Typical RCF Power Distribution Diagram 161
Figure 5-6. Typical DC Power Rack 162
Figure 5-7. Typical DC Load Distribution 163
Figure 5-8. Battery Alarm and Monitor Panel 164
148. Grounding Requirements 165
149. DC Wiring 165

Page No.

150. DC Power-Up Procedures 165
151.-155. Reserved 166

CHAPTER 6. EQUIPMENT INSTALLATION 167

SECTION 1. SYSTEM DESCRIPTION 167

156. General 167
Figure 6-1. RCF Electronic Equipment Block Diagram 168

157. Equipment Rack Configuration 170
Figure 6-2a. Typical Single Channel Equipment Racks 171
Figure 6-2b. Typical Single Channel Equipment Racks 172
Figure 6-3a. Typical Two Channel Equipment Racks 173
Figure 6-3b. Typical Two Channel Equipment Racks 174
Figure 6-4. Typical Transmitter Combiner Equipment Racks 175
158. Wireways 176
Figure 6-5. Receiver Multicoupler Equipment Rack 178
Figure 6-6. Radio Control Equipment Rack 179
Figure 6-7. Typical RCF Cable Tray Installation, Top View 180
Figure 6-8. Typical Duct, Cable Tray and Conduit Installation 181
159.-162. Reserved 183

SECTION 2. INSTALLATION OF EQUIPMENT 184

163. Equipment Installation 184
164.-165. Reserved 185

SECTION 3. EQUIPMENT RACK WIRING AND CABLE INSTALLATION 186

166. Rack Terminal Block 186
167. Audio and Control Cables 186
Figure 6-9a. Typical Equipment Rack Wiring For RCAG UV (T1) 188
Figure 6-9b. Typical Equipment Rack Wiring For RCAG UV (T2) 189
Figure 6-9c. Typical Equipment Rack Wiring For RCAG VU (T1) 190
Figure 6-9d. Typical Equipment Rack Wiring For RCAG VU (T2) 191
Figure 6-10a. Typical Landline Cable Termination 192

Page No.

Figure 6-10b. Typical Landline Cable Termination 193
Figure 6-11. Typical Rack Equipment Grounding 194
Figure 6-12. Typical Audio/Control Cable Configuration 195

168. Coaxial Cable 196
169. RF Coaxial Cable Installation 197
Figure 6-13a. Typical Transmitter RF Cabling System (With Combiner) 198
Figure 6-13b. Typical Transmitter RF Cabling System (Without Combiner) 199
Figure 6-14a. Typical Receiver RF Cabling System (With Multicoupler) 200
Figure 6-14b. Typical Receiver RF Cabling System (Without Multicoupler) 201
Table 6-1. Antenna System Materials List 202
Figure 6-15. VHF Transmitter Combiner Cavity Cable Harness 204
Figure 6-16. UHF Transmitter Combiner Cavity Cable Harness 205
170. RF Cabling for CM-200 T/R Configuration 206
Figure 6-16a. CM-200 T/R Antenna Configuration 207
171. T/R RF Cabling for Fixed-Tuned VHF MDR 208
Figure 6-16b. Fixed-Tuned MDR in T/R Config. 209
172. T/R RF Cabling with Cavity Combiners 210
Figure 6-16c. Fixed Tuned MDR with Cavity Combiners 211

SECTION 4. ANTENNA RF CABLE PATCH PANEL, AND BULKHEAD PLATE INSTALLATION 213

173. Building Antenna RF Cable Patch Panel 213
Figure 6-17. Typical Outside Wall Mounted Antenna Cable Patch Panel 214
174. Antenna RF Cable Bulkhead Plate 215
175.-177. Reserved 216

Figure 6-18a. RF Transmission System Typical 217
Figure 6-19b. Bulkhead Plate and Cable Termination Box 218

SECTION 5. ANTENNA SYSTEM INSTALLATION 219

178. Design Guidelines and Requirements 219
179. Maintenance Considerations 220
180. Interference Reduction 220
181. Interference Resolution 221
182. Frequency Intermodulation Analysis 222
183. Stand-Alone RCF Antenna Configuration 222

Page No.

Figure 6-20. Typical Interference Reduction Devices 223
Figure 6-21. Twelve Frequency Antenna Configuration 224
Figure 6-22. Antenna Configuration fro RCF Collocated at AFSS 225
184. Collocate RCF at AFSS Facility 226
185. RCF Collocated at VORTAC 226
186. RCF Collocated at an Air Route Surveillance Radar 226
Figure 6-23. Typical RCF Collocated With VORTAC 227
187. RCF for an Airport Traffic Control Tower 228
188. Material and Equipment 228
189. Antenna System Installation Summary 229
190. Underground Installation of Coaxial Cable 230
191. Overhead Installation of Coaxial Cable 230
192. Reserved 230
Figure 6-24. Cable Protective Conduit Installation 231
Figure 6-25. Antenna Mast Messenger Cable Installation 232
Figure 6-26. Messenger Cable 1.5 Percent Sag at 70 Degrees Fahrenheit 233

SECTION 6. ANTENNA TOWERS AND POLES 234

193. Metal Antenna Poles 234
Figure 6-27. Typical VHF and/or UHF Antennas On Steel Tower 235
194. Antenna Pole and Platform 236
195. Antenna Tower Coaxial Cable and Junction Box Installation 236
Figure 6-28. Typical RCF Antenna Pole Platform 237
Figure 6-29. Typical VORTAC with RCF Antenna Pole Platforms 238
Figure 6-30a. Typical Antenna Tower Coaxial Cable and Junction Box 239
Figure 6-30b. Typical Antenna Tower Coaxial Cable and Junction Box 240
196. Let-Down Mast Antenna Poles 241
197. RCF Antenna Mounting and Grounding 241
198.-199. Reserved 241
Figure 6-31. Typical Region Supplied Let-Down Antenna Pole 242
Figure 6-31a. Jaquith Industries Let-Down Antenna Pole 243
Figure 6-32. Antenna/Mast Mounting Details 244

SECTION 7. BACKUP EMERGENCY COMMUNICATION (BUEC) EQUIPMENT 245

Page No.

200. Installation of Site BUEC Equipment 245
201.-206. Reserved 246
Figure 6-33a. NEXCOM BUEC 10W UV Rack 247
Figure 6-33b. NEXCOM BUEC 50W UV Rack 248
Figure 6-33c. NEXCOM BUEC 10W VU Rack 249
Figure 6-33d. NEXCOM BUEC 50W VU Rack 250
Figure 6-34. BUEC Antenna Location on Long Range Radar (LRR) Tower 251

CHAPTER 7. SYSTEM TEST AND ACCEPTANCE 252

SECTION 1. EQUIPMENT ACTIVATION, TEST AND CHECKOUT 252

207. General 252
208. Communication Equipment Activation 252
209. Backup Emergency Communications Equipment Checkout 252
210.-215. Reserved 253

SECTION 2. SYSTEM TEST 254

216. General 254
217.-220. Reserved 256

SECTION 3. SYSTEM ACCEPTANCE 257

221. General 257
222. Contractor Acceptance Inspection 257
223. Joint Acceptance Inspection 257
224. Technical Reference Data 257
225. Technical Performance Record 257
226. Flight Inspections 258
227. Site Cleanup 258
228.-235. Reserved 258

Page No.

APPENDIX 1. ACRONYMS 1

APPENDIX 2. REFERENCES 4

APPENDIX 3. EQUIPMENT SPECIFICATIONS 6

1. Purpose 6
2. Equipment Categories 6
3. Equipment Summaries 6
4.-5. Reserved 6
Table 1. Equipment Categories 7
Table 2. CM-200/VR VHF RECEIVER, TYPICAL CHARACTERISTICS 10
Table 3. CM-200/UR UHF RECEIVER, TYPICAL CHARACTERISTICS 12
Table 4. CM-200/VT VHF Transmitter, TYPICAL CHARACTERISTICS 14
Table 5. CM-200/UT UHF Transmitter, TYPICAL CHARACTERISTICS 16
Table 6. CAVU-2100 VHF TRANSMITTER, TYPICAL CHARACTERISTICS 18
Table 7. CAVU-2100 VHF RECEIVER, TYPICAL CHARACTERISTICS 20
Table 8. MDR HI/LOW POWER CAVITY RF FILTER, PHYSICAL CHARACTERISTICS 22
Table 9. CM-300/UT Low Power UHF Transmitter, TYPICAL CHARACTERISTICS 23
Table 10. CM-350/UT High Power UHF Transmitter, TYPICAL CHARACTERISTICS 25
Table 11. CM-300/UR UHF Receiver, TYPICAL CHARACTERISTICS 27
Table 12. CM-50 VHF LINEAR POWER AMPLIFIER, TYPICAL CHARACTERISTICS 29
Table 13. CM-51 UHF LINEAR POWER AMPLIFIER, TYPICAL CHARACTERISTICS 31
Table 14. PET-2000 UHF/VHF EMERGENCY TRANSCEIVER, TYPICAL CHARACTERISTICS 33
Table 14A. URC-200 UHF/VHF TRANSCEIVER, TYPICAL CHARACTERISTICS 35
Table 14B. CT-27221 VHF TRANSMITTER COMBINER, TYPICAL CHARACTERISTICS 37
Table 14C. CT-27222 VHF TRANSMITTER COMBINER, TYPICAL CHARACTERISTICS 38
Table 14D. TYPICAL TRANSMITTER COMBINER CAVITY POWER LOSS AND VSWR 39

Page No.

Table 14E. MDP-1-1113 VHF RECEIVER MULTICOUPLER, TYPICAL CHARACTERISTICS 40
Table 14F. TYPICAL RECEIVER MULTICOUPLER-SIGNAL SENSITIVITIES 42
Table 14G. ANETENNA - ELECTRICAL CHARACTERISTICS 43
Table 14H. ANTENNA - ELECTRICAL CHARACTERISTICS 44
Table 14I. ANTENNA - ELECTRICAL CHARACTERISTICS 45
Table 14J. ANTENNA - PHYSICAL CHARACTERISTICS 46
Table 14K. ANTENNA - PHYSICAL CHARACTERISTICS 47
Table 14L. ANTENNA - PHYSICAL CHARACTERISTICS 48

APPENDIX 4. NONOGRAMS 49

Figure 1. Nomograph for Electromagnetic Propagation in Free Space (100-100,000 MHz) 50
Figure 2. Radio Field Strength/Power Density Conversion Chart 51
Figure 3. Radio Ground-to-Air and Air-to-Air dB Loss/Nautical Miles Chart 52
Figure 4. Antenna Lobing for Phasing Separations of 45 to 720 Degrees 53
Figure 5. Audio dB-VU-dBm Chart 54
Table 15. Audio VBolts/dBm Chart for 600 Ohms 55
Figure 6. Transmitter Modulation Analysis 56

APPENDIX 5. RCF AIR-TO-GROUND ANTENNA LOCATIONS 57

Figure 7. Antenna Pattern Distortion in the Horizontal Plane 58
Figure 8. Typical Transmitter Intermodulation Situation 61
Figure 9. VHF Receiver Desensitization 66
Figure 10. UHF Receiver Desensitization 67
Figure 11. Antenna Spacing to Avoid Inter-modulation Interference (VHF TX - Untuned Final) 70
Figure 12. Antenna Spacing to Avoid Inter-modulation Interference (VHF TX - Tuned Final) 71
Figure 13. Antenna Spacing to Avoid Inter-modulation Interference (UHF TX - Untuned Final) 72
Figure 14. Antenna Spacing to Avoid Inter-modulation Interference (UHF TX - Tuned Final) 73

Page No.

Figure 15. Antenna Spacing to Avoid Intermodulation Interference (VHF TX - LPA With Tuned Cavity) 74
Figure 16. Antenna Spacing to Avoid Intermodulation Interference (UHF TX - LPA With Tuned Cavity) 75
Figure 17. Intermodulation Product Free Space Attenuation Interpolation Graph 78
Figure 18. Computed Receiver Front-End Profile Compared to Specification 80
Figure 19. Typical Pattern Distortion Caused By Another Antenna 81
Figure 20. Slant Distance & Effective Aperture For Staggered Antennas 82
Figure 21. Typical Pattern Distortion Caused By a Vertical Conducting Object 83

APPENDIX 6. VERTICAL LOBING 84

Figure 22. Geometry of Direct and Reflected Propagation Paths 85
Figure 23. Example of Vertical Pattern With Vertical Lobing Distortions (Shown For Flat Earth) 86
Figure 24. Nominal Values for Communications Link 88
Figure 25. Graphical Aid for Determining Service Volumes 91
Figure 26. Comparison Graph for Matching Lobe/Null Structure to Service Volume Requirements 92
Figure 27. Low-Angle Antenna Coverage Limits 93
Figure 28. Position of Nulls vs Grazing Angle For Various Antenna Heights (Dry Dessert) 94
Figure 29. Position of Nulls vs Grazing Angle For Various Antenna Heights (Average Ground) 95
Figure 30. Position of Nulls vs Grazing Angle For Various Antenna Heights (Good Ground) 96
Figure 31. Position of Nulls vs Grazing Angle For Various Antenna Heights (Marshland) 97
Figure 32. Position of Nulls vs Grazing Angle For Various Antenna Heights (Freshwater) 99
Figure 33. Position of Nulls vs Grazing Angle For Various Antenna Heights (Sea Water) 100

Page No.

Figure 34. Distance to Nulls of 12uV Contour For Various Grazing Angles (Dry Desert) 101
Figure 35. Distance to Nulls of 12uV Contour For Various Grazing Angles (Average Ground) 102
Figure 36. Distance to Nulls of 12uV Contour For Various Grazing Angles (Good Ground) 103
Figure 37. Distance to Nulls of 12uV Contour For Various Grazing Angles (Marshland) 104
Figure 38. Distance to Nulls of 12uV Contour For Various Grazing Angles (Freshwater) 105
Figure 39. Distance to Nulls of 12uV Contour For Various Grazing Angles (Sea Water) 106
Figure 40. Comparison Graph for Example No. 1 110
Figure 41. Comparison Graph for Example No. 2 111
Figure 42. Reflection Zone for Vertical Lobing 113

APPENDIX 7. PATTERN DISTORTION 114

Figure 43. General Configuration for Omni-Directional Pattern Distortion 116
Table 16. Gain of Antennas and Objects Causing Pattern Distortion 118
Table 17. Total Pattern Distortion for Four VHF Antennas Arranged in a Square 121
Figure 44. Four Standard Antennas Arranged In a Square 124
Table 18. Computer Generated Analysis of Horizontal Distortion 125

APPENDIX 8. DETERMINATION OF RECEIVER DESENSITIZATION AND TRANSMITTER INTERMODULATION PRODUCT INTERFERENCE 126

Table 19. Receiver Desensitization Worksheet 127

Table 20. Receiver Desensitization Worksheet (Sample) 131
Table 21. Transmitter Intermodulation Product Interference Parameters 134
Figure 45. Single VHF Transmitter Combiner 8-Inch Aluminum Cavity Insertion Loss 136

Page No.

Figure 46. Single UHF Transmitter Combiner 8-Inch Aluminum Cavity Insertion Loss 137
Table 22. Transmitter Intermodulation Product Attenuation 139
Table 23. Filter Device Attenuation 140
Table 24. Transmitter Intermodulation Product Interference Worksheet 143
Table 25. Transmitter Intermodulation Product Interference Worksheet (Sample) 144
Figure 47. Typical Stand-Alone RCF Inter-Modulation Product Interference Calculation 147

APPENDIX 9. 30 Watts versus 50 Watts Output power 150

1. General 150
2. Flight Check Planning 150
3. Flight Check Objectives 150
Table 26. Voice Quality Measuring Scale 151
4. Flight Check Findings 151
Table 27. Flight Check Comparison Table 151
5. Comments and Conclusions 152

APPENDIX 10. CONNECTORS BY CABLE TYPE 154

1. General 154
2. N-Type Connectors for various Andrew Corporation Cables 154
Table 28. Connectors by Andrew Corporation 154
Table 29. Common Transmission Line Connectors by Times Microwave 155
Table 30. Common Transmission Line Connectors by Radio Frequency Systems 157

GENERAL

1. PURPOSE.

This order provides procedures, guidance, and reference material which shall be used in the installation of Remote communications Facilities (RCF), i.e., air-to-ground (A/G) radio communications facilities, in support of the Capital Investment Plan (CIP) Project C06.01-00, Communications Facilities Enhancement as well as the Backup Emergency Communications (BUEC) CIP Project C09.00-00, Ultra-High Frequency Radio Replacement CIP C06.04-00, Next Generation Communication Multimode Digital Radio (MDR) Replacement CIP Project C21.01-01 and regional projects CIP.

2. DISTRIBUTION.

This order is distributed in Headquarters to group level within Technical Operations Services to ATC Communications and Safety and Operations Support; to director level at the FAA Technical Center and Mike Monroney Aeronautical Center; to group level in the Technical Operations Service Areas; and to all Technical Operations field offices with a limited distribution.

3. CANCELLATIONS.

FAA Order 6580.3A, Remote Communication Facility Installation Standards Handbook, dated November 1, 1993, is cancelled.

4. BACKGROUND.

a. Existing System. The existing system of remote A/G communications facilities was established according to regional requirements for terminal and en route traffic control and flight services. Specific facilities are used to support radio frequency (RF) communications between the pilots and control personnel providing these services. Figure 1-1, Existing A/G Radio Communications System, illustrates the existing A/G radio communications system.

b. Proposed System. The improvement of A/G communications facilities through establishment, consolidation, relocation, upgrading, and networking of A/G radio communications facilities will provide improved performance of

facilities which serve the combined needs of air traffic control (ATC) and flight services. This activity is a major element in the CIP Plan family of A/G radio communications projects. One major objective of projects in this category is to provide a modern, solid-state, remotely monitored radio communications network with improved performance for the FAA.

5. PHILOSOPHY.

RCFs provide the A/G radio link between pilots and air traffic controllers, Automatic Flight Service stations (AFSS), and terminals. These facilities employ transmitters, receivers, antenna systems, remote control units, and associated equipment necessary for the transmission and reception of RF communications. When controlled by an Air Route Traffic Control Center (ARTCC), an RCF is designated as a Remote Center Air to Ground (RCAG); a Remote Transmitter Receiver (RTR) when controlled by an Airport Traffic Control Tower (ATCT) or Terminal Radar Approach Control (TRACON); and a Remote communications outlet (RCO) when controlled by an FSS or Automated Flight Service station (AFSS). Since the three types of remote communications facilities use common technology and have common design requirements, a single installation standards handbook is applicable to all three types. The Project C06.01-00, Communications Facilities Enhancement improves performance through the enhancement of the various types of communications facilities and upgraded installation standards.

a. Cost. Enhancement of individual facilities will support the FAA goal of Greater Capacity. New and relocated communication facilities enable the establishment of new sectors to support capacity. In addition, new relocated communication facilities enable new and more efficient flight patterns. Efficient flight patterns reduce aircraft operation and maintenance costs for the airline industry. The ultra high frequency radio replacement program will provide significant benefits to the FAA. The ultra high frequency radios will be deployed concurrently with the multi-mode digital radios and will achieve minimum cost avoidance for simultaneous deployment.

b. Performance. When existing facilities do not provide the desired level of performance with regard to RF coverage, reliability and radio frequency interference (RFI) standards, performance may be enhanced when the new installation standards are put into practice. These standards will define proper installation of equipment and grounding systems, electromagnetic compatibility (EMC) objectives, and Electromagnetic Interference (EMI) and RFI reduction measures.

c. Results. Implementing the guidelines contained in this handbook will improve performance through the following:

(1) Replace aging and increasingly unreliable equipment.

(2) Reduced maintenance costs.

(3) Improved installation procedures.

(4) Improved site management.

(5) The current air/ground communication system requires regular maintenance to support the FAA goal of Greater Capacity. The growth in air traffic operational requirements has increased the need for air/ground communications coverage. This order contains standard design and installation criteria for communications facilities at consolidated as well as individual stand-alone sites.

6. **SITE CRITERIA.** RCF site relocation, and/or reconfiguration planned by the regions must meet all of the air traffic specified service volume, EMC/EMI/RFI standards, and frequency protection criteria. This will require FAA headquarters and regional spectrum management offices to perform an EMC study, an RFI analysis, and an RF coverage analysis for the frequencies associated with all of the specified service volumes at these sites. It is imperative that spectrum management offices be involved early in the design process to ensure frequency analysis and assignment proceed in a timely manner. Any condition in the RF environment that may affect facility operation must be brought to the attention of the RCF manager and project coordinator. These conditions shall be addressed in the preliminary stages of facility design or relocation.

7. **Reserved.**

8. **Reserved.**

9. **Reserved.**

10. **Reserved.**

11. **Reserved.**

12. **Reserved.**

CHAPTER 2. REMOTE COMMUNICATIONS FACILITIES

SECTION 1. GENERAL

13. REMOTE COMMUNICATIONS FACILITIES OPERATION.

The RCF provide RF communications for various services within the ATC system. The present ATC system is required to provide coverage of the entire airspace over the contiguous United States, Hawaii, Alaska, and the Atlantic and Pacific control zones. This coverage extends from ground surface at terminal areas to an altitude of 70,000 feet at enroute areas.

a. NAS Communications System. The National Airspace System (NAS) communications system encompasses a network of communication control facilities and their associated RCFs. The RCF may be stand-alone or be collocated with other FAA owned facilities to extend the service range of the ATC facility. The number of stand-alone RCF sites is ever increasing to support the FAA goal of Greater Capacity. An illustration of the NAS A/G Communication Infrastructure ATC Radio Communications System is shown in Figure 2-1.

b. Terminal A/G Radio Communications Frequencies. The number of A/G radio communications frequencies for non-radar, non-approach and radar approach control facilities vary according to functional requirements.

c. Terminal Control Facilities. The terminal control facilities include ATCT, TRACON, AFSS/FSS, and their associated RCFs. A TRACON can be collocated with an ATCT or in a stand-alone facility. The Air Force RADAR APPROACH CONTROL and Navy RADAR AIR TRAFFIC CONTROL CENTER are military facilities similar to the FAA TRACON, except that they often have ground-controlled approach capabilities.

(1) Air Traffic Control Tower. The upper portion of the tower, called the TOWER CAB, has windows which provide a panoramic view of the airport grounds and airspace in the vicinity. Radar displays which show aircraft location are used by tower personnel for collision avoidance and to position aircraft for landing and takeoff. Control panels for radio communications equipment are located in the tower to provide RF communications between the pilot and ground personnel in the performance of their duties. Figure 2-2, ATCT and Ancillary Facilities, illustrates its principal facilities.

(a) ATCT Buildings. The ATCT buildings are frequently leased by the FAA from the local municipality. Current policy permits the FAA to construct controller positions, each with its own control and audio equipment. The ATCT building is comprised of a tower cab and in some cases a collocated TRACON, associated equipment room, and administrative offices.

FIGURE 2-1. NAS AIR/GROUND COMMUNICATIONS INFRASTRUCTURE

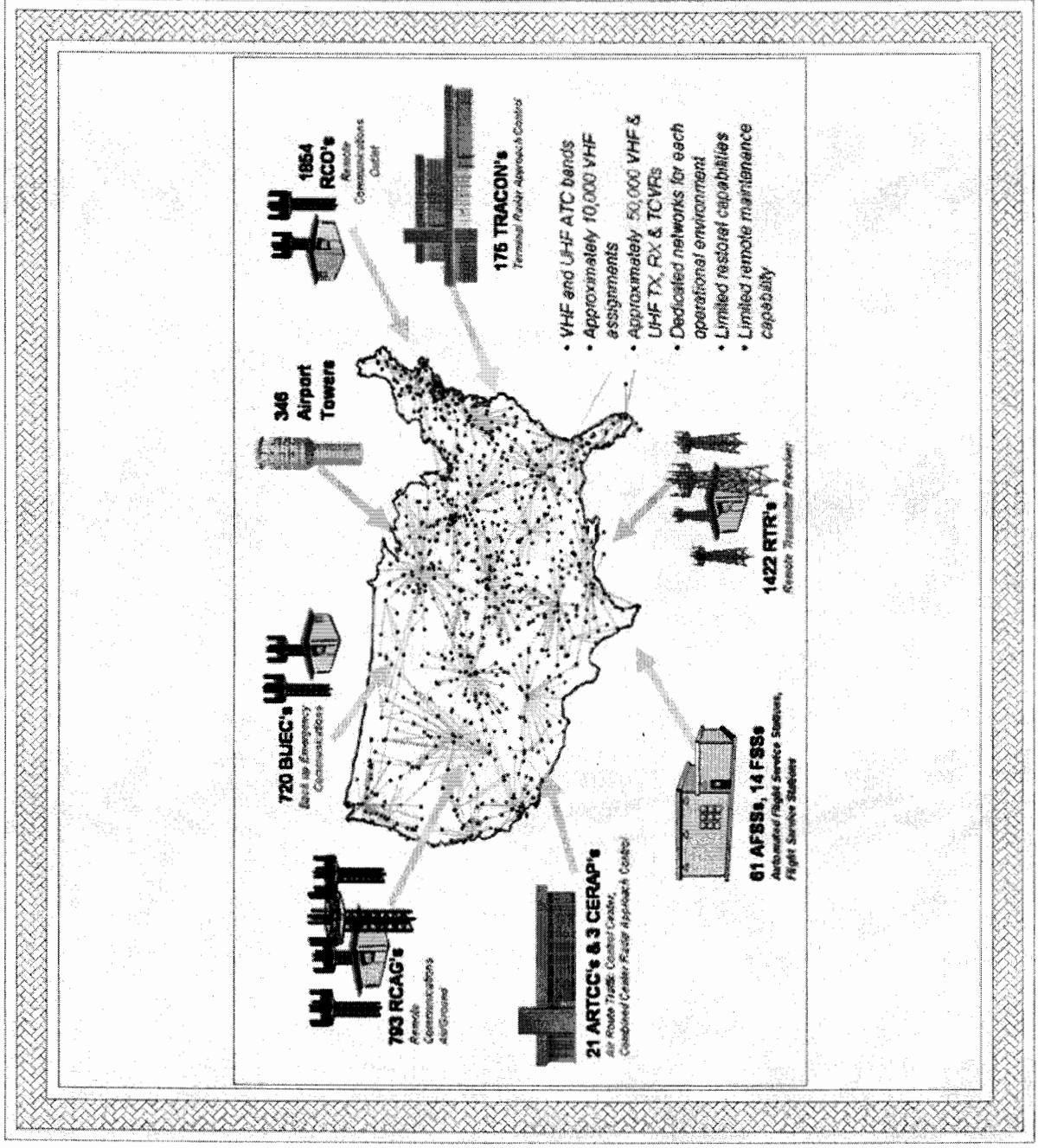

FIGURE 2-2. ATCT AND ANCILLARY FACILITIES

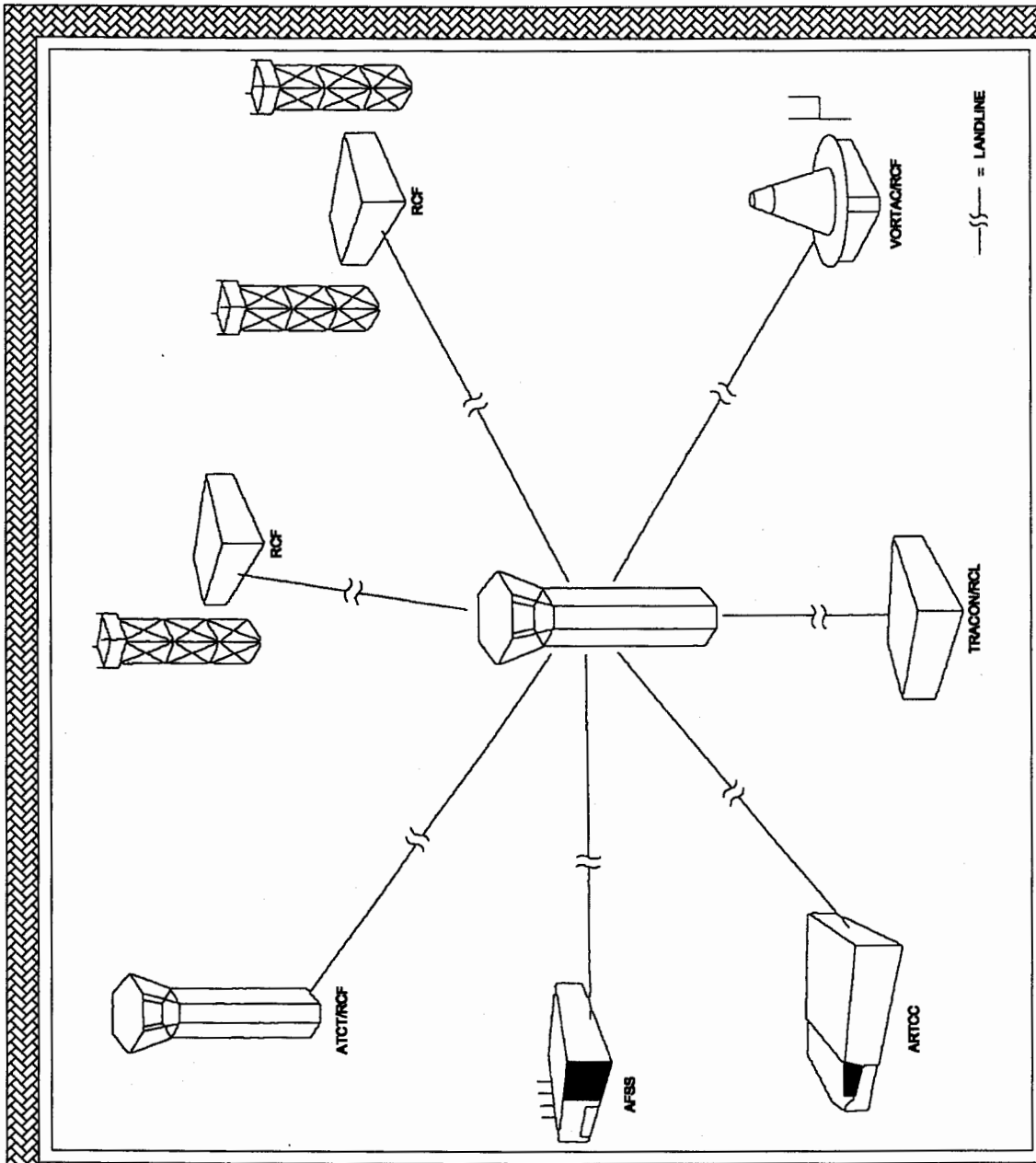

(b) Tower Cab. The typical tower cab is located so that a panoramic view of the airport is possible with little or no obstruction. Air traffic controllers work in this space and utilize A/G radio communications, radar, and information from TRACON facilities in the performance of their duties. Operations are performed using communications consoles, radar displays, and various indicators and navigational aids.

(c) Air Traffic Controller. Air traffic controllers accept aircraft entering their geographic area of responsibility. They establish A/G radio communications with the aircraft, identify it, and control flight progress until the aircraft is handed over to an adjacent sector or released from the control system.

(2) Terminal Radar Approach Control. In busy air traffic areas, a TRACON is used to monitor aircraft position via radar. Radar systems provide vital information used in collision avoidance systems and allow proper control and positioning of approaching aircraft.

(a) TRACON Facility. A typical TRACON facility is located in the base of the tower. It could, however, be located in a separate building. The TRACON facility is connected to the tower cab by means of an interphone/intercom system, or an interfacility switching system. Besides having the normal transmit and receive equipment access similar to the tower cab, the TRACON facility is provided with automated radar terminal system equipment access.

(b) TRACON Equipment Room. The TRACON equipment rooms normally contain the audio jack panel, patch panel (resectoring panel), power supplies, Navigational Aids (NAVAIDS) monitor and visual aids monitor equipment, Digital BRITE (DBRITE), collocated Remote Transmitter/Receiver (RTR) equipment and other equipment systems (Air Surveillance Radar, terminal facility voice switch associated equipment).

(3) Flight Service Stations. Flight service information is provided by FSS and AFSS facilities. These stations provide flight plan and weather service information and information on terminal activity, arrivals and departures, connecting flights, fueling, maintenance requests, and other data the pilot may require regarding aircraft servicing and passenger needs. These facilities provide flight service information to pilots via radio and/or commercial telephone communications. AFSS/FSS facilities can provide limited airport information service where there is no control tower. Depending on the size of the AFSS/FSS and its location, the AFSS/FSS radio equipment may be at a collocated Remote Communications Outlet (RCO) or a stand-alone RCO.

d. Enroute Control Facility. All aircraft operating under Instrument Flight Rules (IFR) must maintain contact with an ARTCC and/or the tower enroute system on the proper A/G radio communications frequency while enroute. This radio contact is made through a RCAG communications facility.

The ARTCC is the hub of ATC and focal point for coordination and A/G radio communications. An ARTCC is interconnected via the interfacility communications network with other elements of other NAS facilities. The enroute centers control the operation of an RCAG and Air Route Surveillance Radars (ARSR). The connections between the ARTCC and the national RCAG system are illustrated in Figure 2-3, Enroute National RCAG System, Major Facilities. Since the RCAG may be collocated at a Very High Frequency (VHF) Omni-Range/VHF Omni-Range Tactical Air Navigation (VORTAC) facility, or another FAA facility several hundred miles from its ARTCC, it is generally connected by leased landlines, satellites, or an FAA owned Remote Communications Link (RCL) (i.e., microwave).

(1) **ARTCC Controlled U.S. Airspace.** U.S. airspace controlled by the ARTCC is divided into individual boundary areas. The boundary area of an ARTCC is divided horizontally and vertically into sectors. Each sector is assigned to an air traffic controller who is responsible for control of air traffic within that sector. The air space described by this boundary is defined as the radio coverage area that exhibits no less than -87dBm (10uV) signal strength. This area must also meet the 14dB protection criteria at the aircraft receiver input. A network of long-range radar and beacon equipment provides each controller with data for locating and tracking commercial, general aviation, and military aircraft. An A/G radio communications system enables the controller to communicate with the aircraft.

FIGURE 2-3. EN ROUTE NATIONAL RCAG SYSTEM, MAJOR FACILITIES

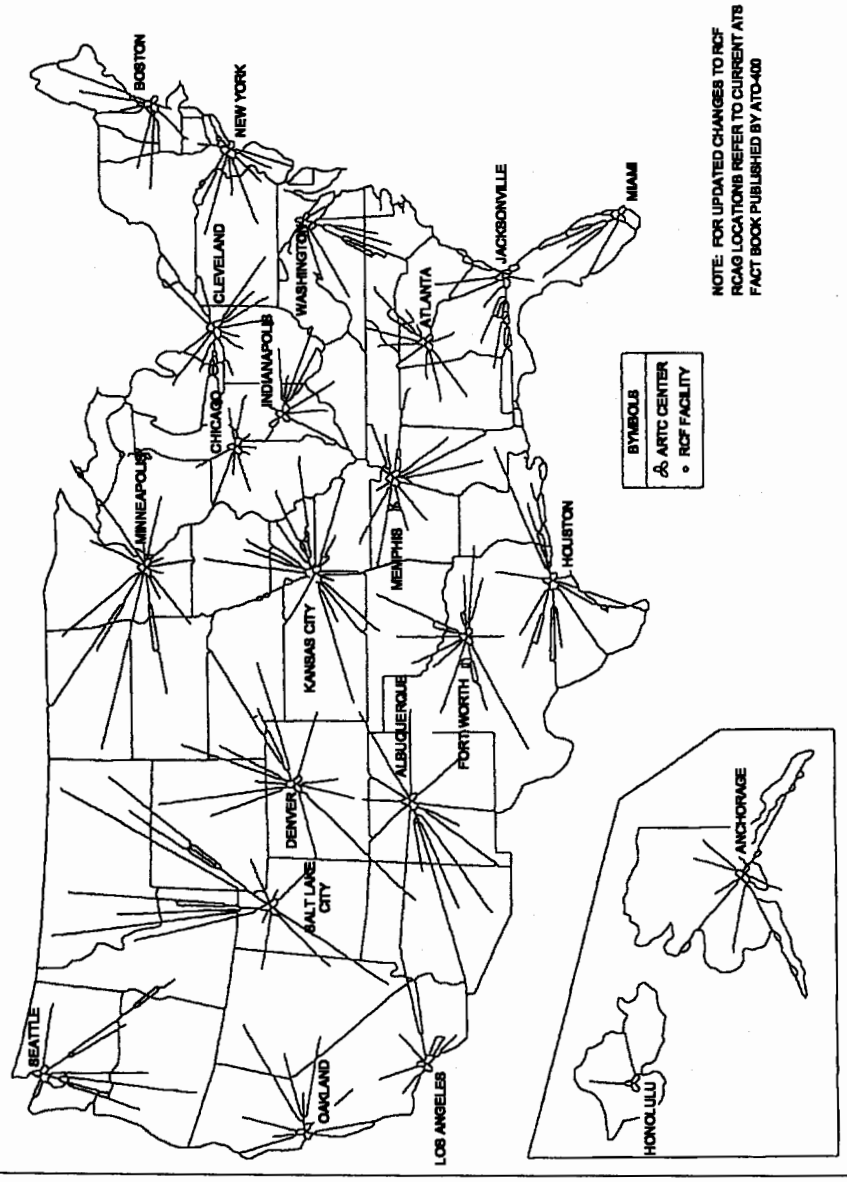

(2) **ARTCC A/G Radio Communications system.** The ARTCC A/G radio communications system includes equipment which provides the air traffic controller with a means of controlling the equipment at RCAG facilities. Up to five ATC positions are provided in each sector, with A/G radio communications and telephone communications to perform individual functions. Each controller has access to the communications channel at the RCAG providing A/G radio communications coverage in the controller's sector of responsibility. Factors such as changes in service to airports, changes in procedures, changes in system usage, etc., can require resectorization. This procedure is accomplished by a Voice Switch Communication System (VSCS) that allows reassignment of A/G radio communications frequencies to different controller positions.

(3) **Air Route Traffic Control Center**. The ARTCC contains equipment used to monitor and communicate with aircraft in enroute airspace. As aircraft approach the service area of a TRACON, communications is passed to TRACON and/or ATCT facilities. Figure 2-4, ARTCC and Ancillary Facilities, illustrates these facilities.

(4) **ARTCC Equipment Room.** The ARTCC equipment room is normally located on the lower floor of the ARTCC building and typically contains the VSCS, recording equipment, transmit and receive controls, and remote audio equipment. Backup Emergency Communications (BUEC) equipment may also be located in the ARTCC equipment room. RCAGs may be collocated with the ARTCC facility.

14. AUTOMATED TERMINAL INFORMATION SYSTEM.

The Automated Terminal Information System (ATIS) is typically used at most airports and is a broadcast-only service to pilots. The ATIS supplies information relative to conditions at an airport and is available on a continuous basis, with updates as required, during the operating hours of the airport. The information provided consists of barometric pressure, wind speed and direction, runway in use, airport advisories, etc., and is broadcast either over a VHF Omni directional Range (VOR) channel or a dedicated VHF channel. ATIS is available to aircraft at higher activity control towers.

FIGURE 2-4. ARTCC AND ANCILLARY FACILITIES

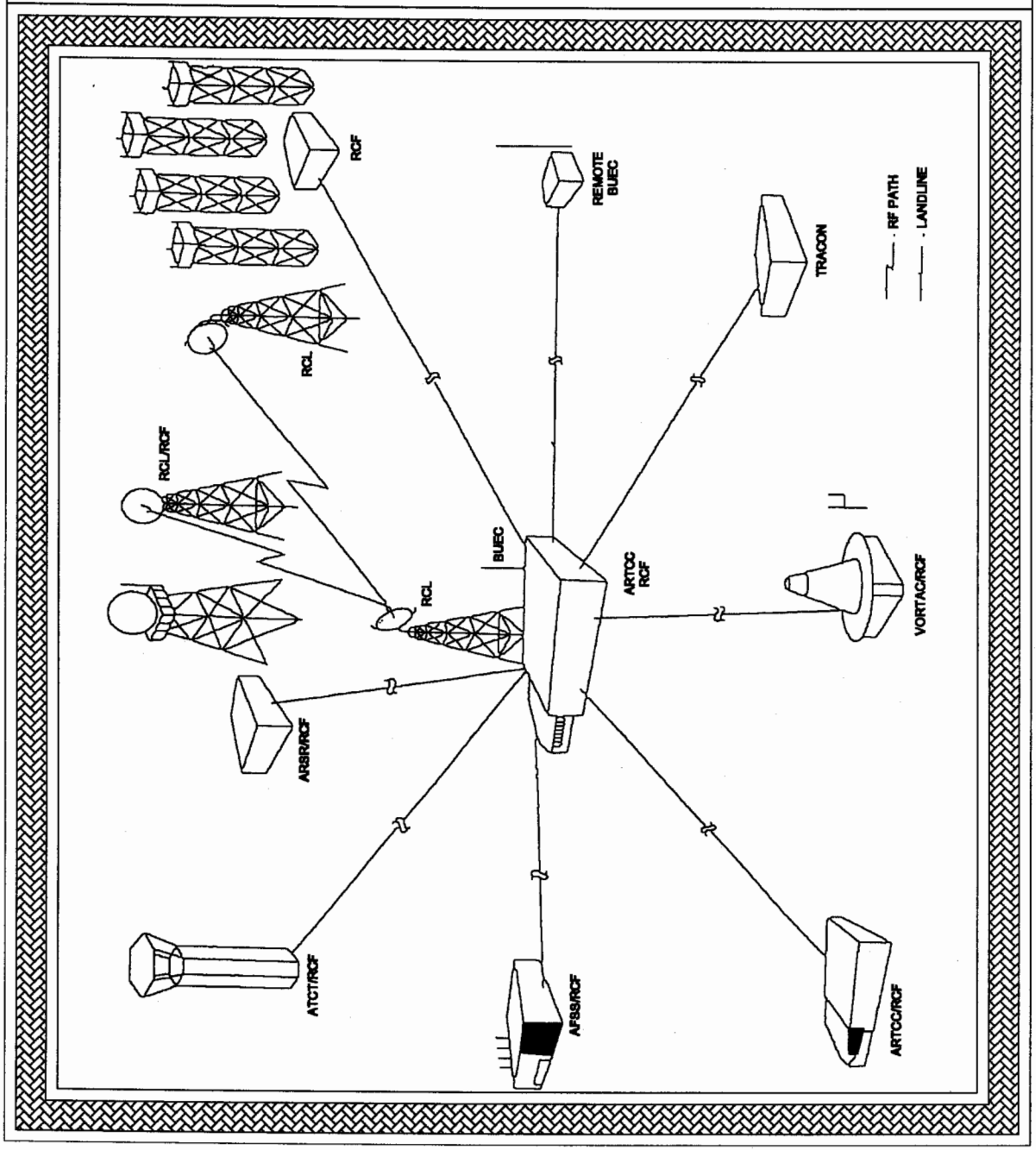

15. ENROUTE FLIGHT ADVISORY SYSTEM.

The Enroute Flight Advisory System (EFAS) is located at selected AFSSs and provides pilots with real-time weather advisories. The weather data provided is obtained from real-time weather observations and pilot reports. When a pilot requests EFAS service, the EFAS specialist monitoring the transmission selects the appropriate ground transmitter and provides the information the pilot requests. When the EFAS station is not manned, an automatic voting system determines the ground receiver location with the best reception from the aircraft and selects the appropriate ground transmitter to relay prerecorded information to the pilot. The EFAS is supported by the Automated Surface Observing System (ASOS), the Automated Weather Observing System (AWOS), and the AWOS Data Acquisition System (ADAS). A high frequency capability is utilized to expand the EFAS service to international and trans-oceanic flights via an ARINC Service.

16. INTERFACILITY COMMUNICATIONS SYSTEM.

In the vast majority of cases, cost considerations dictate that FAA owned facilities be used when both FAA owned and leased interfacility communications facilities are available. In exceptional circumstances, the FAA owned facilities may already be fully utilized and additional interfacility communications facilities shall then be obtained on a lease basis.

17. Reserved.

18. Reserved.

19. Reserved.

20. Reserved.

21. Reserved.

SECTION 2. FUNCTIONAL EQUIPMENT DESCRIPTION

22. GENERAL.

The RCF equipment and its associated antenna system, provide control facilities (ATCT, TRACON, ARTCC, and AFSS/FSS) with radio transmitter and receiver system capabilities. An RCF may be collocated with the control facility or geographically separate from the control facility. The ability to remotely locate an RCF makes it possible to locate antennas to meet air traffic requirements of radio coverage and system protection. A single RCF may serve a number of control facilities. Figure 2-5, RCF and Control Facilities, illustrates the interrelationship between these control facilities.

23. TRANSMITTER SYSTEM.

The VHF and Ultra High Frequency (UHF) transmitter system associated with A/G radio communications includes RF, antenna, audio, and control equipment. The Radio Control Equipment (RCE) provides audio, control and monitor functions

a. RF Equipment. The RF equipment is comprised of main and standby transmitters, and the associated transmission system. The transmission system consists of the antennas and transmission lines which connect the antennas to the transmitters, combiners, coaxial line, coaxial RF line sections, circulators, filters, and coaxial relays. The relays transfer main and standby transmitter outputs to the antenna system. The main and standby equipment provide required redundancy and are used interchangeably with the exception of AFSS/FSS service which may be optional. The standby equipment is not considered a backup system. There is fixed frequency BUEC equipment at alternate locations.

b. Control and Audio Circuits. The control and audio circuits between the control facility and the RCF are FAA owned or leased landlines, RCLs or unconditioned voice grade landlines, satellite, fiber optics, radio links, and data lines. Transmit audio from the control facility and receive audio from the RCF pass over these circuits. An alternate path is capable of being switched when the primary line fails.

c. Antennas. The transmit antennas may be omnidirectional or directional depending on the coverage requirements. To obtain the Facility Transmitting Authorization (FTA) the antenna type, directivity, and gain must be provided.

d. Operation. The VHF and UHF bands are presently used by the FAA for two-way communications in the ATC service. The existing fixed-frequency, VHF transmitters have a power output of 10 watts in the 118 Megahertz (MHz) to 137.0 MHz band. The UHF transmitters have a power output of 10 watts in the 225 MHz to 400 MHz band. These transmitters, when required, use a Linear

Power Amplifier (LPA) to increase output power to 50 watts to provide increased service coverage. Additionally, BUEC radios are functional in either the VHF or UHF bands and when required (ARTCC only) have an RF power output of 10 watts to 50 watts.

24. RECEIVER SYSTEM.

The VHF and UHF receiver systems associated with A/G radio communications include: RF, antenna, audio, and radio control equipment. The Radio Control Equipment (RCE) provides audio, control and monitor functions.

a. RF Equipment. The RF equipment is comprised of main and standby receivers and the associated antenna system. The antenna system consists of the antennas, transmission lines that connect the antenna to the receivers, multicouplers, filters, and coaxial relays. The coaxial relays are used to transfer main and standby receiver RF inputs to the antenna systems.

b. Control and Audio Circuits. The control and audio circuits between the control facility and the RCF are FAA owned or leased landlines, RCLs or unconditioned voice grade landlines, satellite, fiber optics, radio links, and data lines. Transmit audio from the control facility and receive audio from the RCF pass over these circuits.

c. Antennas. The receiver antennas may be omnidirectional or directional depending on the coverage requirements. To obtain the Facility Transmitting Authorization (FTA) the antenna type, directivity, and gain must be provided.

FIGURE 2-5. RCF AND CONTROL FACILITIES

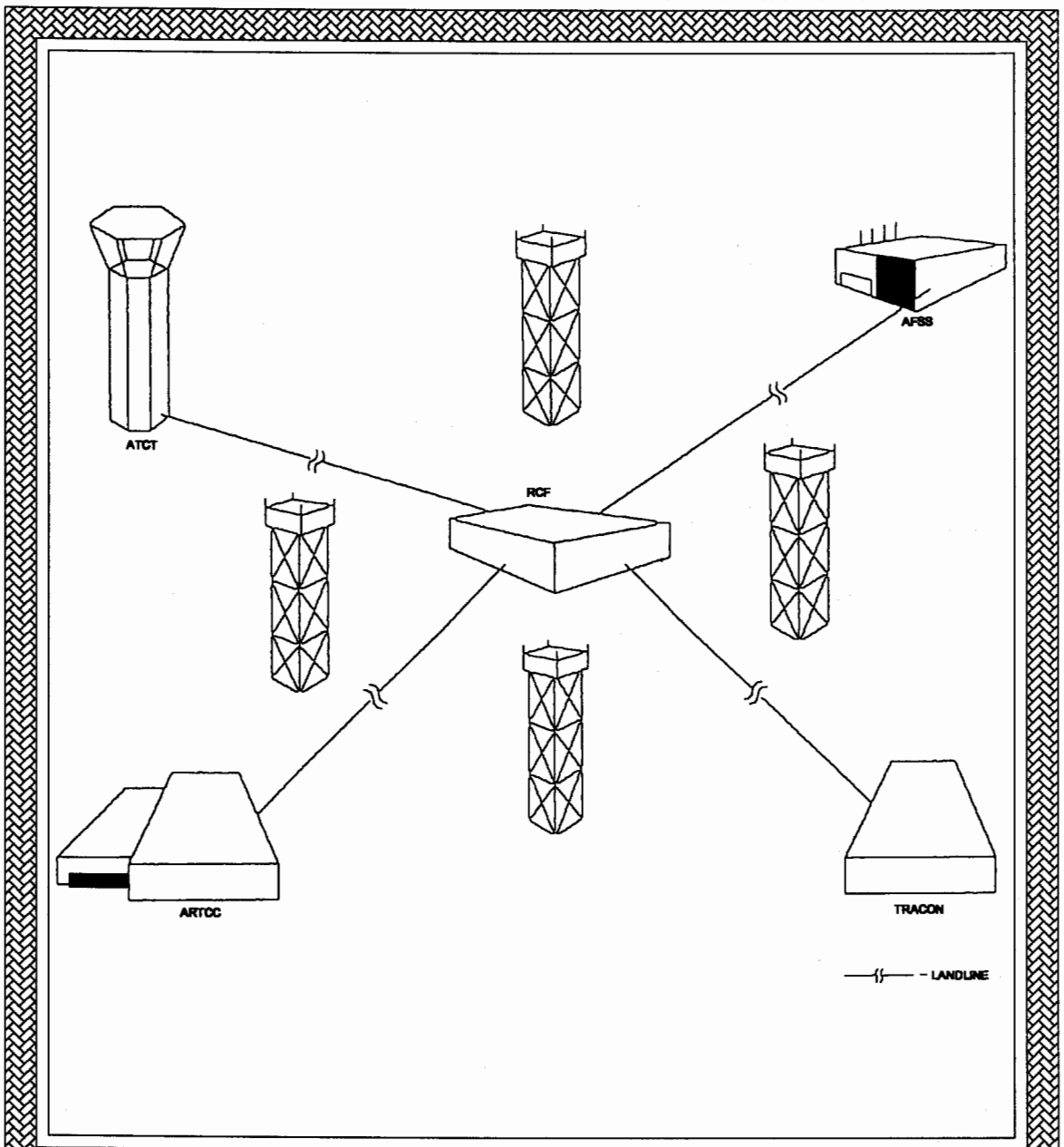

25. ANTENNA SYSTEM.

Half-wave, vertically polarized, omnidirectional dipole antennas enclosed in fiberglass radomes are used. The dipoles have an area of non-coverage directly over the antenna. This non-coverage area leads to the requirement, in high and super high sectors, for the RCAG site be located outside the sector boundaries and not along an air route. Cross-channel interference, transmitter power reductions, an increase in A/G radio communications, and requirements for additional frequency channels demand better antennas. The configurations are single VHF and UHF, and stacked collinear VHF and UHF arrays. Directional VHF and UHF antennas are also used to satisfy special coverage applications.

26. REMOTE MAINTENANCE MONITORING.

The Remote Maintenance Monitoring (RMM) system improves day-to-day operations and reduces maintenance costs. The equipment goal is to provide an efficient system approach to integrate the requirements of the Environmental Remote Monitoring Subsystem (ERMS) sensoring and maintenance monitoring, and emergency backup battery power control. A single maintenance monitoring equipment set is used to allow the monitor equipment to integrate the monitoring facility with all of its associated remote facilities. The remote site and facility maintenance panels have the ability to interface with the Maintenance Data Terminal (MDT). Maintenance monitoring parameters and Site Adaptation Data (SAD) tables will be reviewed and/or edited locally with a MDT, or the Centralized Maintenance System (CMS). The monitoring equipment provides ATC facilities with a standardized remote monitoring system that incorporates expansion and reconfiguration capabilities. The modular construction of monitoring equipment accommodates the FAA size requirements for ATC facilities and their associated remote radio facilities. Communication Facilities provide an option for various RMM development between remote and control locations using RCE. Several NAS facilities utilize RCE and modem networks for RMM.

a. Monitor Equipment Functions. Automatic detection and alarm sensors provide fault information for failures occurring within the indicator, display, and control subsystems and for failures occurring within main, standby, or backup equipment. An alarm is sensed by the closure of a normally open dry relay contact. This alarm information is then converted to a serial digital format and transmitted over the communication systems. The alarm system shall be capable of displaying a momentary as well as a constant alarm condition.

b. Remote Maintenance Monitoring. Facility RMM is provided through the monitoring equipment. The equipment will provide each RCF with performance monitoring, and status certification capability, which can be accomplished from centralized control and work centers. The RCF systems have a standardized subsystem for remote monitoring of the operational status and key performance parameters of A/G radio communications equipment, selected

environmental building parameters (ERMS), standby power source status, and site security over the communication path. ARTCCs are considered the primary monitoring sites; however, other sites such as ATCT and FSS/AFSS facilities equipped with RMM consoles and interface components may also monitor communications equipment status. A diagram of RMM is shown in Figure 2-6, Remote Maintenance Monitoring System.

27. EMERGENCY COMMUNICATIONS.

Some FAA facilities maintain emergency communications A/G radio equipment to satisfy their particular requirements.

a. Terminal Facility Emergency Transceiver. Portable self-contained multi-frequency transceivers are located at ATCT and some TRACON facilities to provide emergency A/G radio communications. These transceivers ensure that a source of A/G radio communications is always available and used only in the event of catastrophic failures of the main and standby transmitter/receiver systems. Use is restricted to emergencies because of the limited number of frequencies, low power output, and potential for producing RF interference. FAA Order 6510.4, Radio Communications Requirements for Air Traffic Control Facilities, addresses current applications for emergency transceivers.

b. Emergency Communication Systems. Some large TRACONs have unique emergency communications systems that provide programmable transceivers that can be quickly tuned to the failed frequency(s) by a separate control panel accessed by either the air traffic controller or the maintenance control desk.

c. En Route Facility Backup Emergency Communications. Fixed remote VHF and UHF radios are used to provide backup emergency A/G radio communications for ARTCCs located throughout the United States. Each ATC sector should have at least one or more BUEC site as required to provide adequate sector coverage. A BUEC site may be located at an ARTCC, Figure 2-7, BUEC System, illustrates the current system. The BUEC equipment is required to be physically separate from the supported RCAG, with separate power sources and communication paths.

FIGURE 2-6. REMOTE MAINTENANCE MONITORING SYSTEM

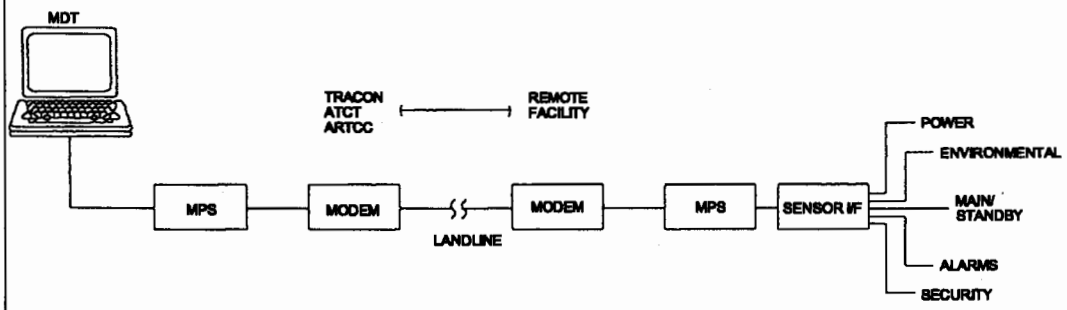

28. RESERVED.

29. RESERVED.

30. RESERVED.

31. RESERVED.

32. RESERVED.

FIGURE 2-7. ARTCC A/G COMMUNICATIONS SYSTEM REDUNDANCY

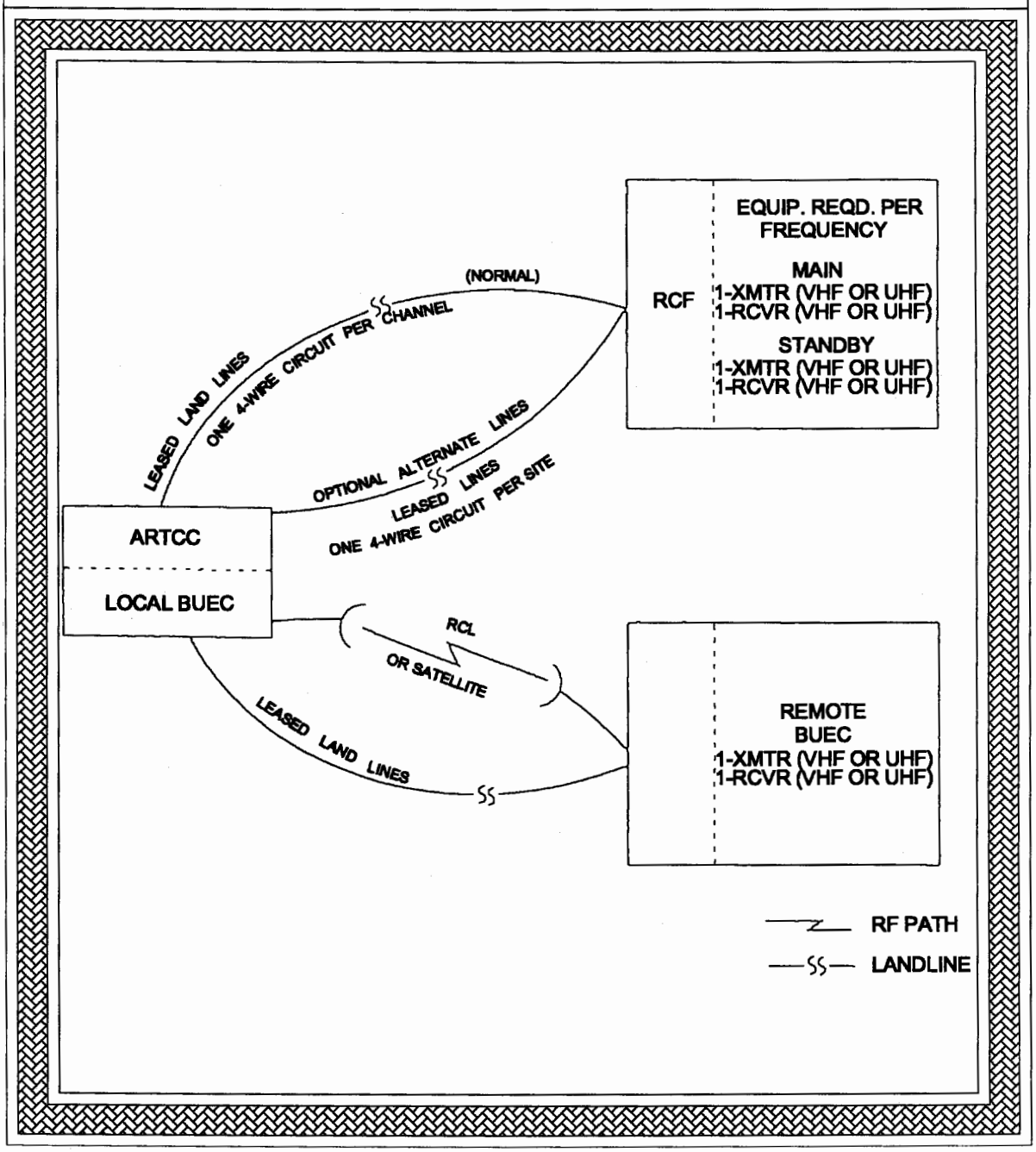

SECTION 3. EQUIPMENT DESCRIPTION

33. GENERAL.

The following equipment is typically located at A/G radio communications facilities.

a. Antennas.

b. Standard 83-inch high racks (ETA 19" W).

c. RF line section panel/RF relay patch panel.

d. VHF transmitters.

e. VHF receivers.

f. UHF transmitters

g. UHF receivers.

h. Radio Control Equipment.

i. Lightning and surge protection.

j. Battery supply with charger.

k. Mini-Demarc.

The RCF may include additional equipment such as filters, combiners, multicouplers and radio links as required to meet the objectives of Project C06.01-00, Communications Facilities Enhancement. For current radio equipment requirements, refer to FAA Order 6510.4.

34. VHF Transmitters.

There are two types of transmitters being installed in the NAS. The CM-200VT is a 10 watt, frequency synthesized VHF A/G transmitter. The transmitter power can be increased by adding a 50 watt CM-50 LPA. The CM-200 supports 25 Kilohertz (kHz) channel spacing between 117.975 MHz and 136.975 MHz. The Multimode Digital Radio (MDR) CAVU-2100 is also a new VHF transmitter which has two configurations. A 10 watt MDR configuration will utilize a low power top hat (LPTH) unit. The second MDR configuration utilizes a 30 watt high power top hat (HPTH) with the capability of 30 watts output. The MDR has a capability of 25 KHz and 8.33 KHz frequency spacing and VDL Mode-3. Normal transmitter power is 10 watts. The use of higher power configurations is justified when the power output of 10 watts from the transmitter is not sufficient to provide a -87 dBm signal level at the input of the aircraft receiver located at the edge of the associated service

volume. The VHF A/G transmitter has a failsafe mode which, after sensing the CM-50 or CM-51 linear power amplifier (LPA) failure, directs the output of the transmitter directly to the antenna system.

35. UHF TRANSMITTERS.

The CM-200UT is a 10 watt UHF A/G transmitter similar to the CM-200VR VHF transmitter except for the operating frequencies, and provides an optional 50 watt CM-51 LPA configuration. UHF transmission is between 225.000 MHz and 399.975 MHz with 25 kHz channel spacing. The next generation of UHF transmitters is the 10 watt CM-300UT and the 50 watt CM-350UT.

36. VHF RECEIVERS.

The CM-200VR is a VHF A/G receiver capable of reception on any one of 760 frequencies spaced 25 kHz apart between 117.975 MHz and 136.975 MHz. The CAVU-2100 VHF receiver is capable of 25 KHz and 8.33 KHz frequency spacing and VDL Mode-3 operation.

37. UHF RECEIVERS.

The CM-200UR is a UHF A/G receiver similar to the CM-200VR VHF receiver in overall design, except for its operating frequency and number of frequencies available. The UHF receiver is capable of reception on any one of 7,000 channels spaced 25 kHz apart between 225.000 MHz and 399.975 MHz. The CM-300UR UHF receiver is capable of 25 KHz frequency spacing.

38. RESERVED.

39. RADIO CONTROL SYSTEM.

The radio control system at the RCF sites includes equipment to interface incoming audio and control signals with equipment from a control facility.

a. Components. New installations shall use solid-state radio control equipment at control facilities for selection of transmit or receive radio channels and main/standby selective transmitter keying. Remote operation includes paired transmitter/receiver control systems. The current equipment configuration is an all encompassing self contained unit made by the Communication Systems Technology, Inc (CSTI) wholly owned by General Dynamics.

b. Radio Control Equipment (RCE). Model CS-2330/RCE provides simultaneous voice and data transmission over leased 4-wire telephone lines. The equipment supports primary and backup telephone line capabilities as well as adaptable connection modes to support dual control and separate radio site configurations (i.e. a transmitter site and a receiver site). Typical radio equipment requires control signals like push to talk (PTT) to key the transmitter. In addition, if the remote radio site includes standby

radios, but only one antenna, a main/standby radio select control is also required. These control signals need to be transmitted to the remote radio site along with air traffic controller audio signals. The RCE system supports simultaneous transmission of both audio and control signals over one telephone line. The equipment also functions over satellite and microwave transmission paths.

c. Functions. The RCE provides a very flat (+/-1.0 dB) and wide (300 Hz to 2,450 Hz) voice band using advanced digital signal processing (DSP) technology. The RCE provides an 800 bps data channel continuously with voice. This high data rate enables typical PTT response of 60 milliseconds. The RCE communications equipment facilitates maintenance activities by providing automated channel monitoring (via CMS) and built in diagnostics. New functionality can be added to the RCE by remotely downloading new software. RCE at remote sites can be updated over existing trunk connections without having to physically go to the remote facility.

40. ANTENNAS.

A number of antenna configuration and antenna arrays are in use at RCF facilities.

a. Configurations. The antenna configurations are in single and dual stacked collinear arrays. All are designed to match a 50 ohm characteristic impedance transmission line. Each dipole within a stacked array is independently operated with a high degree of isolation. The electrical, mechanical, and installation characteristics are compatible with existing and future FAA facility applications.

b. Antenna Arrays. Highly directional antennas are also utilized for resolving coverage difficulties. A directional collinear antenna is available that has approximately four dBi gain (omni directional). Another directional Yagi-type antenna is also available which provides approximately 10 dBi gain.

41. MULTICOUPLERS.

Active receiver multicouplers, which provide 0 dB through-loss, can be used when an RCF uses multiple receivers and site analysis dictates that more than one receiver, would be connected to a single antenna. The unit has an output capacity of 4 ports or 8 ports depending on model. These output ports will allow up to 8 receivers to be connected to one antenna. Unused ports shall be terminated with 50 ohm loads. The multicoupler operates in the 118 MHz to 138 MHz range for VHF and 225 MHz to 400 MHz range for UHF.

42. COAXIAL RF LINE SECTIONS.

The coaxial RF line sections are self-contained, passive devices configured for permanent mounting in a 50 ohm RF line. They are used to monitor the voltage standing wave ratio (VSWR) of transmission systems. A coaxial-RF line section is sometimes referred to as an RF body.

43. COMBINERS.

Transmitter combiners shall be used when site analysis dictates the need to use a single antenna for more than one transmitter. Through-loss is less than 3.0 dB for up to four transmitter/antenna combinations. Consideration shall be made as to the coverage area impact of the combiner through-loss.

44. ISOLATORS.

Isolators are non-reciprocal devices with three ports and are used for intermodulation (IM) control. This is accomplished by terminating reflected or other incoming signals into a 50 ohm load on the third port.

45. FILTERS.

Both transmitters and receivers can use filters when necessary to prevent transmitter noise and receiver desensitization. Transmitters can employ harmonic and intermodulation suppression filters to reduce third order harmonics where required.

46. TRANSMISSION LINE.

Internal RF coaxial cable transmission paths (i.e., to/from an internal RF cable patch panel) or external short jumper cables shall utilize double shielded RF Cable or corrugated shield patch type coaxial cable or lower loss RF Cable. For long transmission paths (i.e., from facility to antenna tower) the RF coaxial transmission cable shall be the lower loss RF Cable. Where RG-214 cable is not suitable (i.e., multicoupler applications) double shielded RG-223 shall be used keeping lengths as short as possible. The RF transmission cable in all applications shall have a nominal 50 ohms impedance. Older cable types that might exist (RG-8, RG-213 and RG-17) shall be replaced with the recommended, lower loss RF cable types.

47. EQUIPMENT RACKS.

The basic equipment rack frequently used to house electronic equipment has a modular solid-sided steel sheet metal cabinet with rear access door(s). The following types of equipment cabinet racks are presently available from the FAA Logistics Center or Ontario Rack Fabrication Center:

22" Deep BUEC, Control Sites	NSN: 8200-00-01-8514-1
BUEC (Radio Rack 22" CTR)	NSN: 8200-00-00-3893-1
25" Deep BUEC, LPA, Remote Sites	NSN: 8200-00-01-7427-1
25" Deep U/V BUEC, Remote Sites (STD) 2 Ch	NSN: 8200-00-00-8515-1
25" Deep BUEC, RCAG Sites	NSN: 8200-00-01-7428-1
25" Deep V/U BUEC, w/2250 Block, Remote (AGL)	NSN: 8200-00-00-8547-1
25" Deep V/U BUEC, w/66 Block, (AEA/ZOA)	NSN unknown
Rack, Single Door, 83 inches High	NSN 5975-01-094-1436-1
Rack, DSRCE configured, 83 inches High	NSN 8200 00 130 4280-1

48. RESERVED.

49. RESERVED.

50. RESERVED.

51. RESERVED.

SECTION 4. SITE CHARACTERISTICS

52. GENERAL.

A majority of RCF site structures are over 40 years old. Heating, ventilation, and air conditioning are insufficient, in many cases, for the equipment housed in the structures. As remote sites are built or refurbished to solid-state radio control equipment to allow the inclusion of projects modified under the Regional Projects CIP.

53. STAND-ALONE RCF.

An FAA study completed in April 1984 concluded that 12 VHF and 12 UHF channels can be consolidated at a single RCF through the use of external isolation devices such as combiners and multicouplers. RCF antenna site configurations and RFI suppression devices should be considered. As a result, the present configurations may be changed. RCF antennas are typically mounted on steel towers with hexagonal or rectangular platforms with sidearms for antenna separation. A site layout for an RCF is shown in Figure 2-8, Stand-Alone RCF Site Layout.

54. COLLOCATED RCF.

A collocated RCF/VORTAC site requires pole mounted RCF antennas. Typical antenna mounting details are shown in Figure 2-9, Typical Antenna Pole Mounting. An integral RCF collocated with a VORTAC is shown in Figure 2-10, Typical Integral RCF/VORTAC Antenna Mounting. All new antenna poles within a VOR site perimeter will not exceed 45 feet in height, excluding antenna. Pole footings will be mounted no closer than 55 feet from the center of the VOR facility. Recommended lateral distance is 60 feet between pole and VOR antenna. Antenna poles shall only be installed with horizontals parallel to VOR radial. Antenna poles shall be fabricated from non-metallic materials with exception of antenna horizontal support structures. A flight check is not required due to early testing provided and no impact to VOR as a result of proper placement of pole. Also, FAA Order 6820.7, VOR Handbook, paragraph 341f allows placement of poles without a flight inspection. Another configuration is illustrated in chapter 6, Figure 6-38, Typical Region Supplied Let-Down Pole Antenna. These poles exhibit a high dielectric constant as compared with metal poles. The RCF antennas are typically mounted on the cross-arm in let-down pole applications. The antenna pole platform and the antenna pole cross-arm shall be oriented on the long axis with respect to the VORTAC radial. RCF transmission lines may be run underground (the recommended method) or suspended between the building and antenna pole via messenger cable.

55. BUILDING FLOOR PLANS.

The impact of the building floor plan for the added equipment shall be determined since sufficient space may not exist to meet standard space requirements for access to the front, side and rear of the equipment. The actual RCF building dimensions should be based on the quantity of equipment required to support the number of frequencies to be installed at the collocated RCL/RCF facility.

FIGURE 2-8. STAND-ALONE RCF SITE LAYOUT

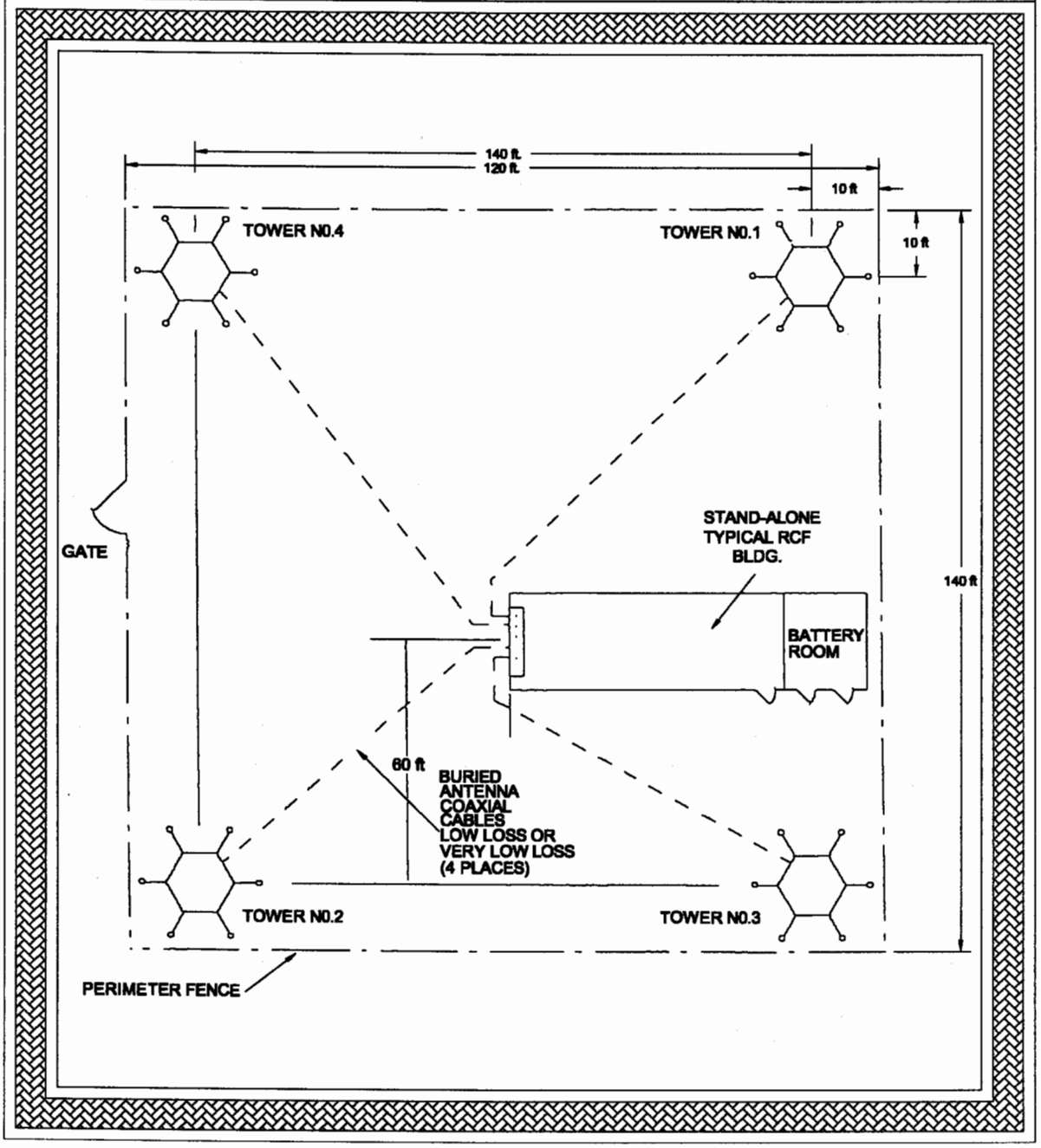

FIGURE 2-9. TYPICAL ANTENNA POLE MOUNTING

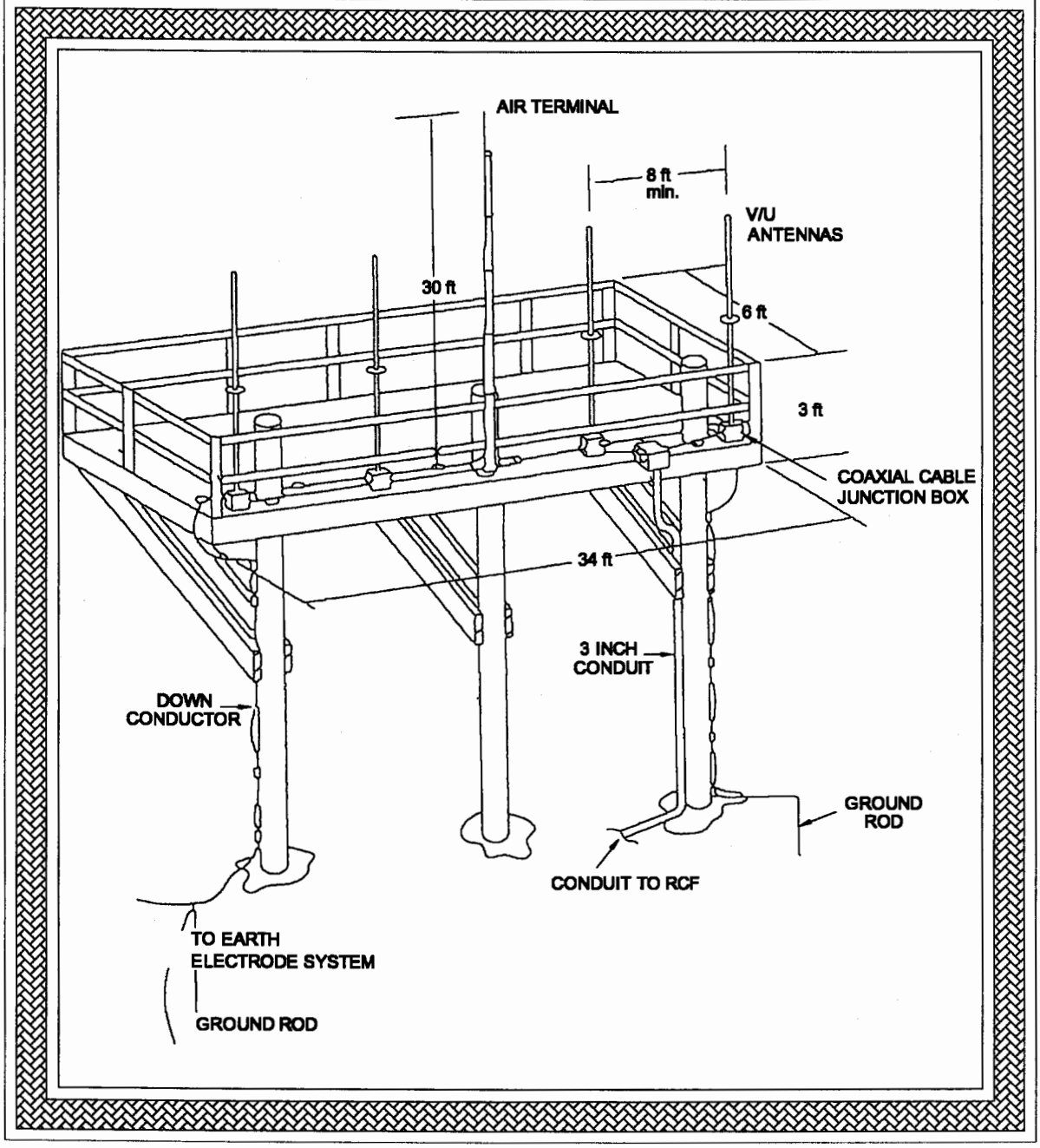

FIGURE 2-10. TYPICAL INTEGRAL RCF/VORTAC ANTENNA MOUNTING

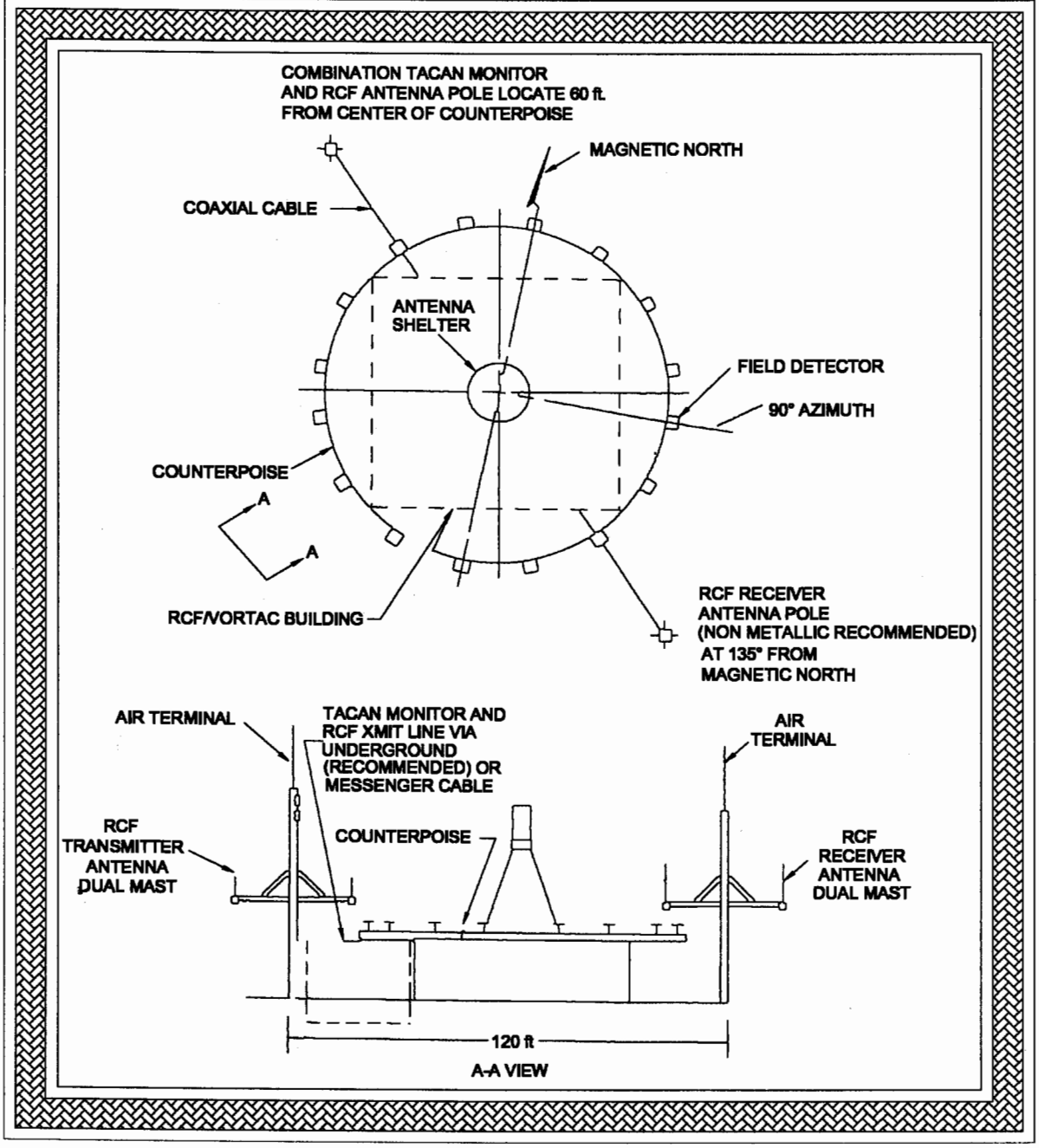

FIGURE 2-11. TYPICAL RCF FLOOR PLAN WITH RACKS (NO ENGINE GENERATOR)

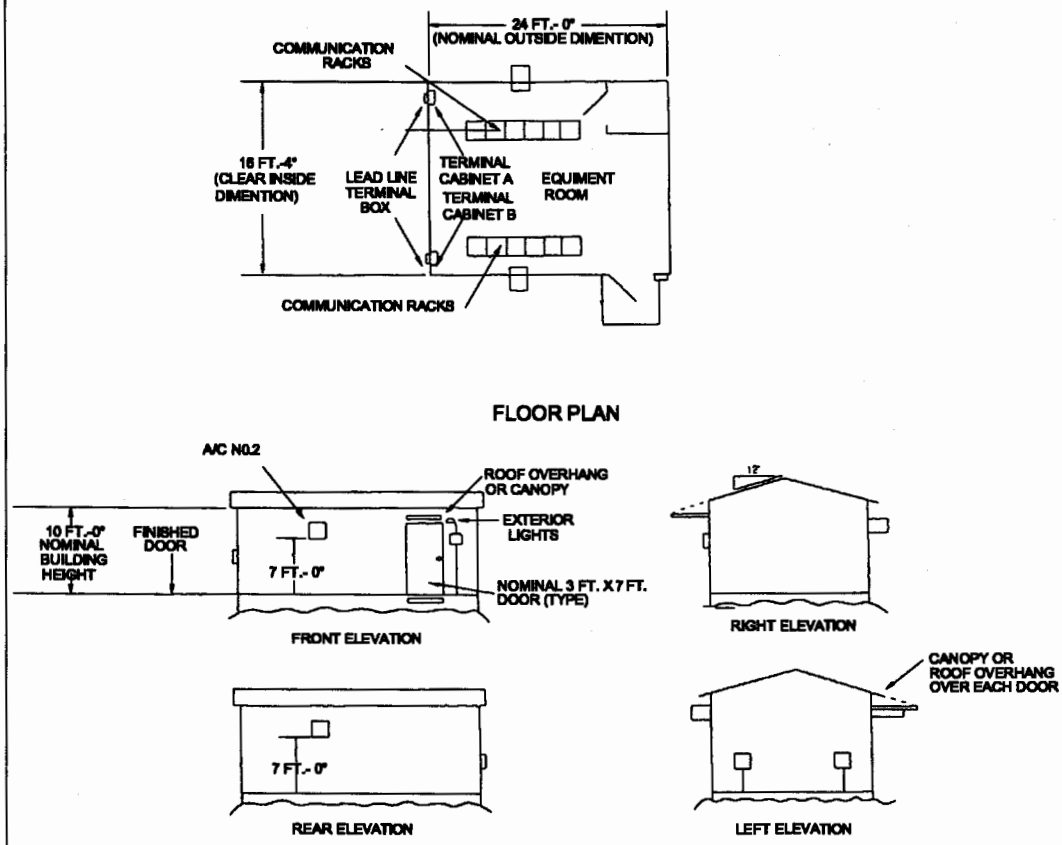

FIGURE 2-12. TYPICAL RCF/RCAG FLOOR PLAN WITH RACKS

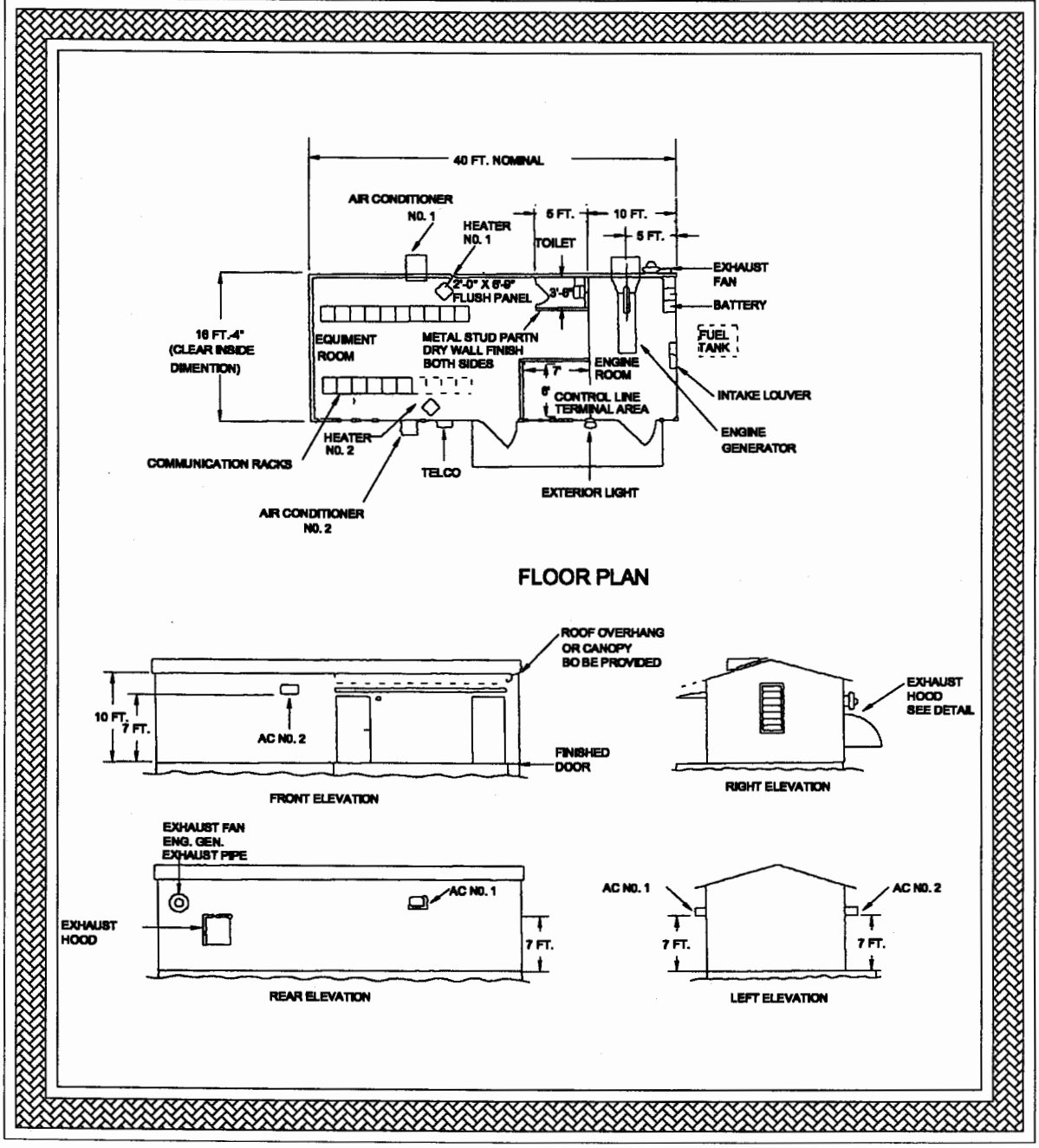

FIGURE 2-13. TYPICAL RCF/RTR FLOOR PLAN WITH RACKS

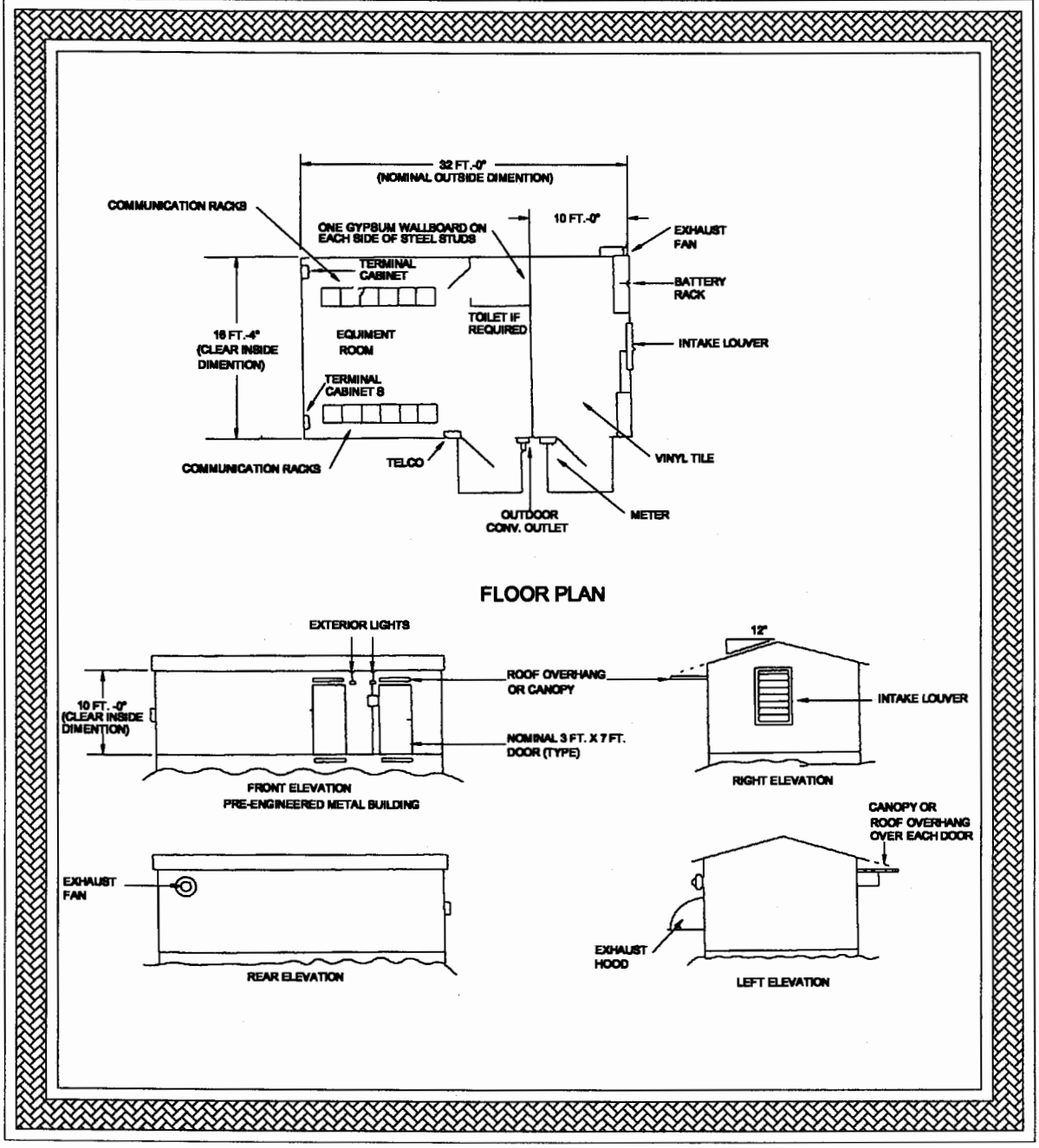

a. Racks and Equipment. Typical rack and equipment floor plans for stand-alone RCF/RCAG/RTR are shown in Figure 2-11, Typical RCF Floor Plan with Racks (No Engine Generator), Figure 2-12, Typical RCF/RCAG Floor Plan with Racks, and Figure 2-13, Typical RCF/RTR Floor Plan with Racks.

b. Collocated Equipment. Typical RCF/VORTAC collocated equipment floor plans are shown in figures 2-14 through 2-18 listed in subparagraphs (1)-(6). These figures illustrate the equipment floor plan layout showing equipment, RCF/VORTAC building conduit, and junction boxes. The communications equipment backup power battery racks are mounted no closer than three feet from the NAVAIDS battery rack. Telephone Company (TELCO) termination equipment installation shall be enclosed in a chainlink barrier isolated from FAA equipment where possible. This would allow TELCO access to their equipment yet maintain security of the FAA equipment.

(1) Figure 2-14, RCF/VORTAC Collocated in a 21′ Diameter Building, shows the floor plan and six communications equipment racks and five future equipment racks collocated in the 21-foot size RCF/VORTAC building that is not equipped with an engine generator.

(2) Figure 2-15, RCF/VORTAC Collocated in a 20′x 36′ Building, shows four communications equipment racks collocated in the RCF/VORTAC facility.

(3) Figure 2-16, RCF/VORTAC Collocated in a 25′x 31′ Building, shows four communications equipment racks collocated in the RCF/VORTAC facility. Although only four racks are shown for EFAS or ATIS equipment, there is sufficient room for several more communications equipment racks.

(4) Figure 2-17, RCF/VORTAC Collocated in a 32′ Diameter Building, shows four communications equipment racks collocated in the building floor plan.

(5) Figure 2-18, RCF/VORTAC Collocated in a 36′x 36′ Building, shows five communications equipment racks collocated in the building floor plan.

(6) An FAA-sponsored study has been conducted to analyze concepts for a future standard shelter for RCF/VORTAC equipment. One of these concepts is a 32-foot diameter signal counterpoise erected over a 21-foot square facility shelter. The floor plan for this building is shown in Figure 2-19, Future RCF/VORTAC Facility.

c. RCF Collocated at RCL. The following are illustrations of RCF/RCL collocated equipment building floor plans.

FIGURE 2-14. RCF/VORTAC COLLOCATED IN A 21' DIAMETER BUILDING

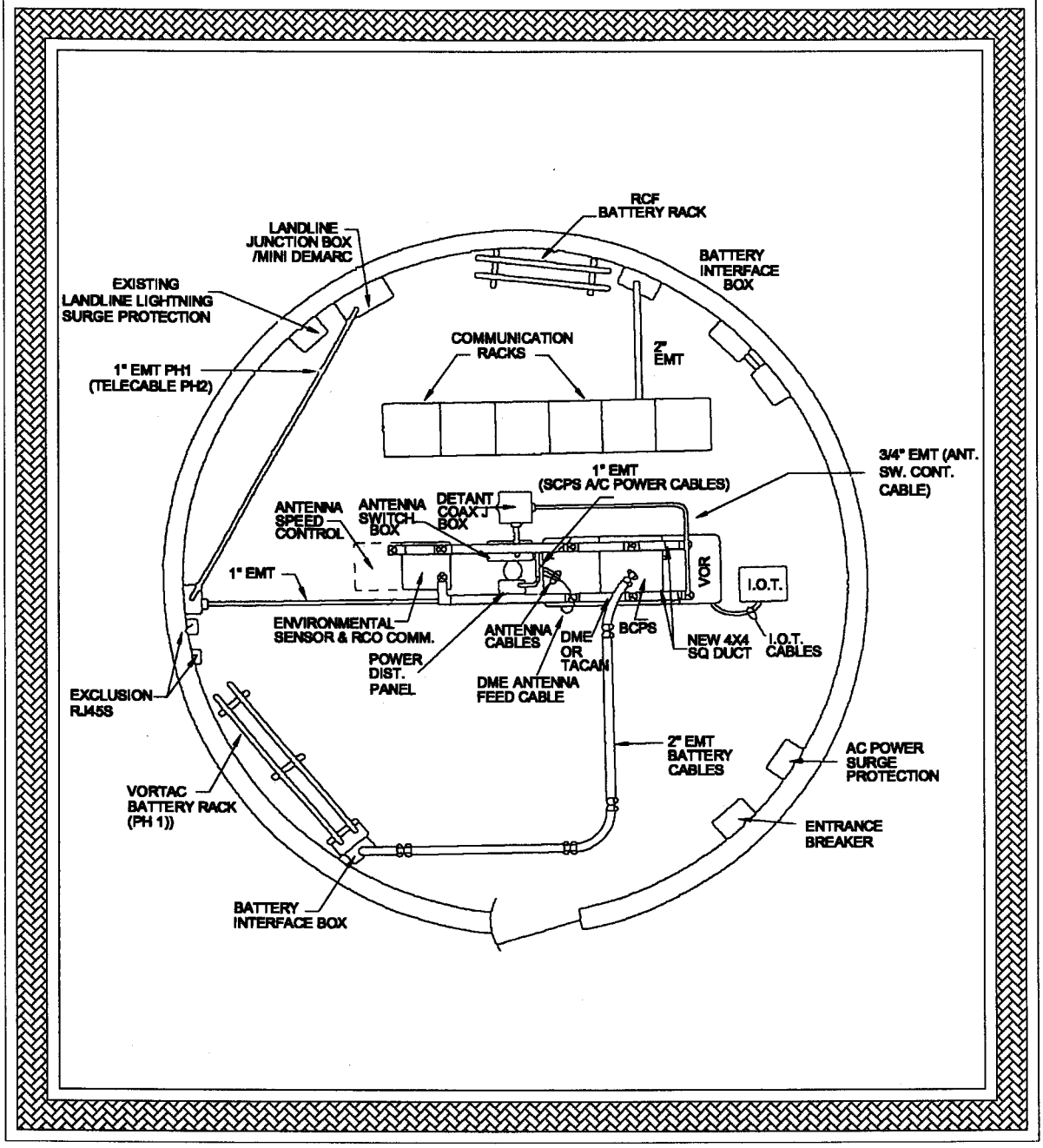

FIGURE 2-15. RCF/VORTAC COLLOCATED IN A 20' X 36' BUILDING

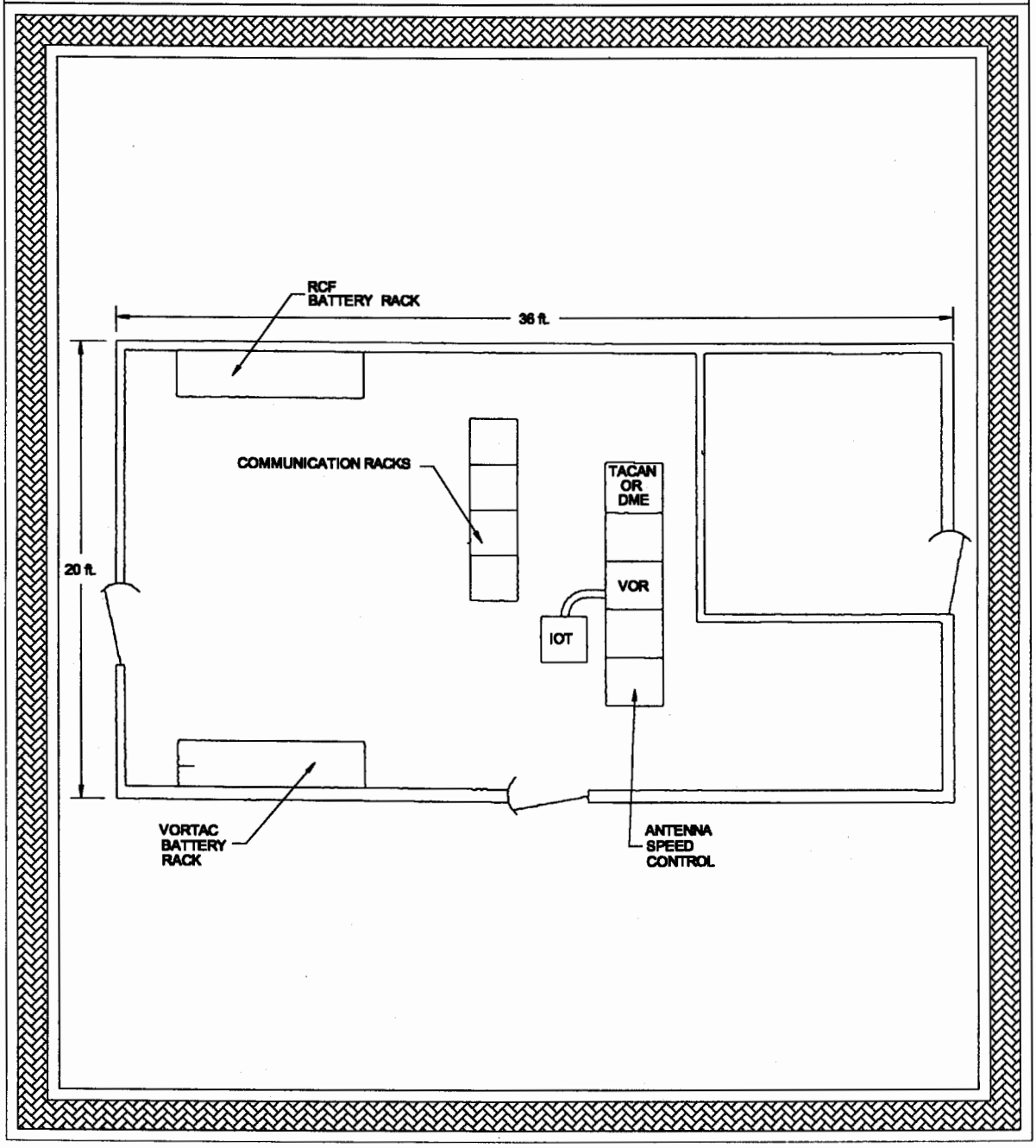

FIGURE 2-16. RCF/VORTAC COLLOCATED IN A 25' X 31' BUILDING

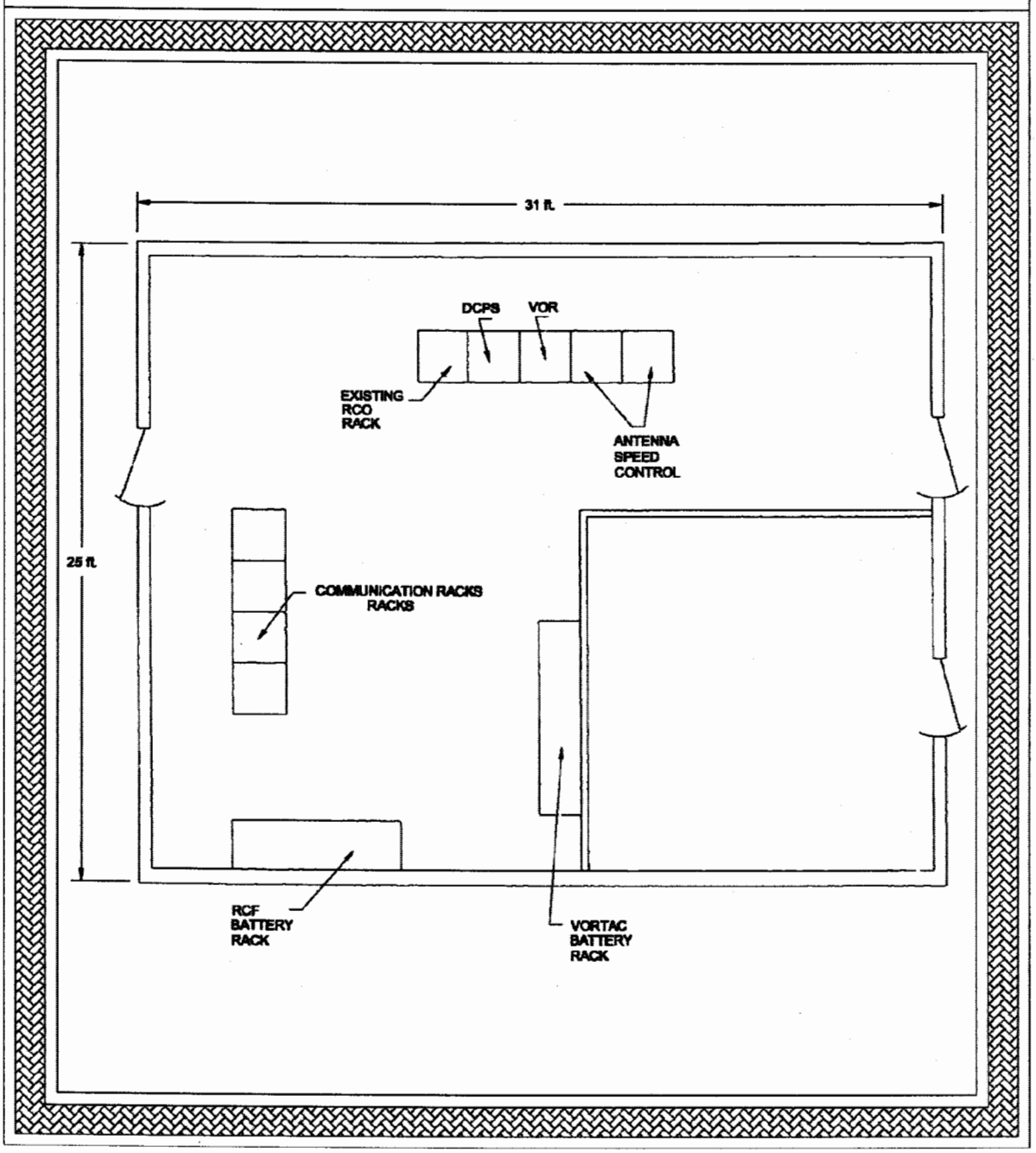

FIGURE 2-17. RCF/VORTAC COLLOCATED IN A 32' DIAMETER BUILDING

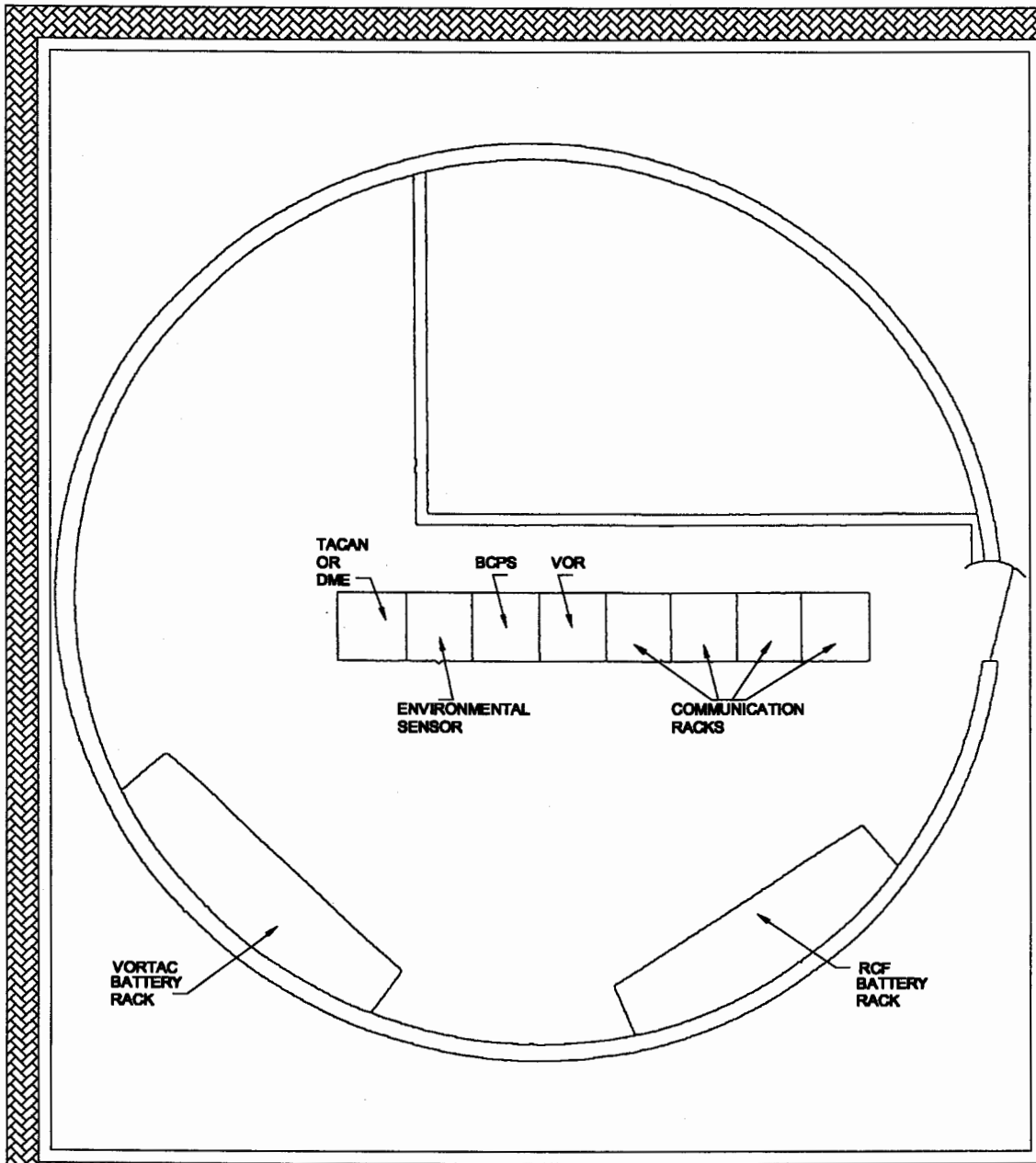

FIGURE 2-18. RCF/VORTAC COLLOCATED IN A 36' X 36' BUILDING

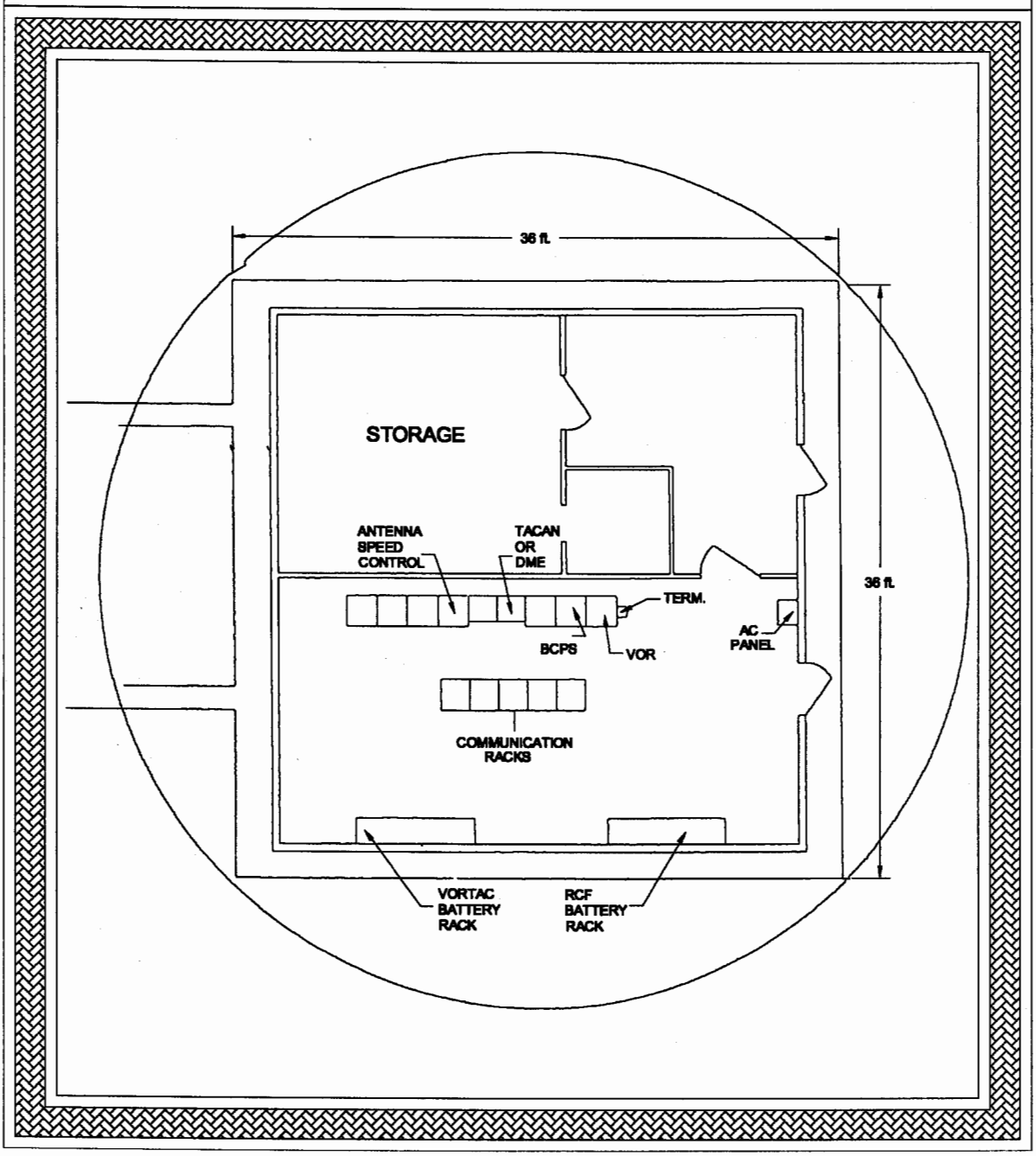

FIGURE 2-19. FUTURE RCF/VORTAC FACILITY

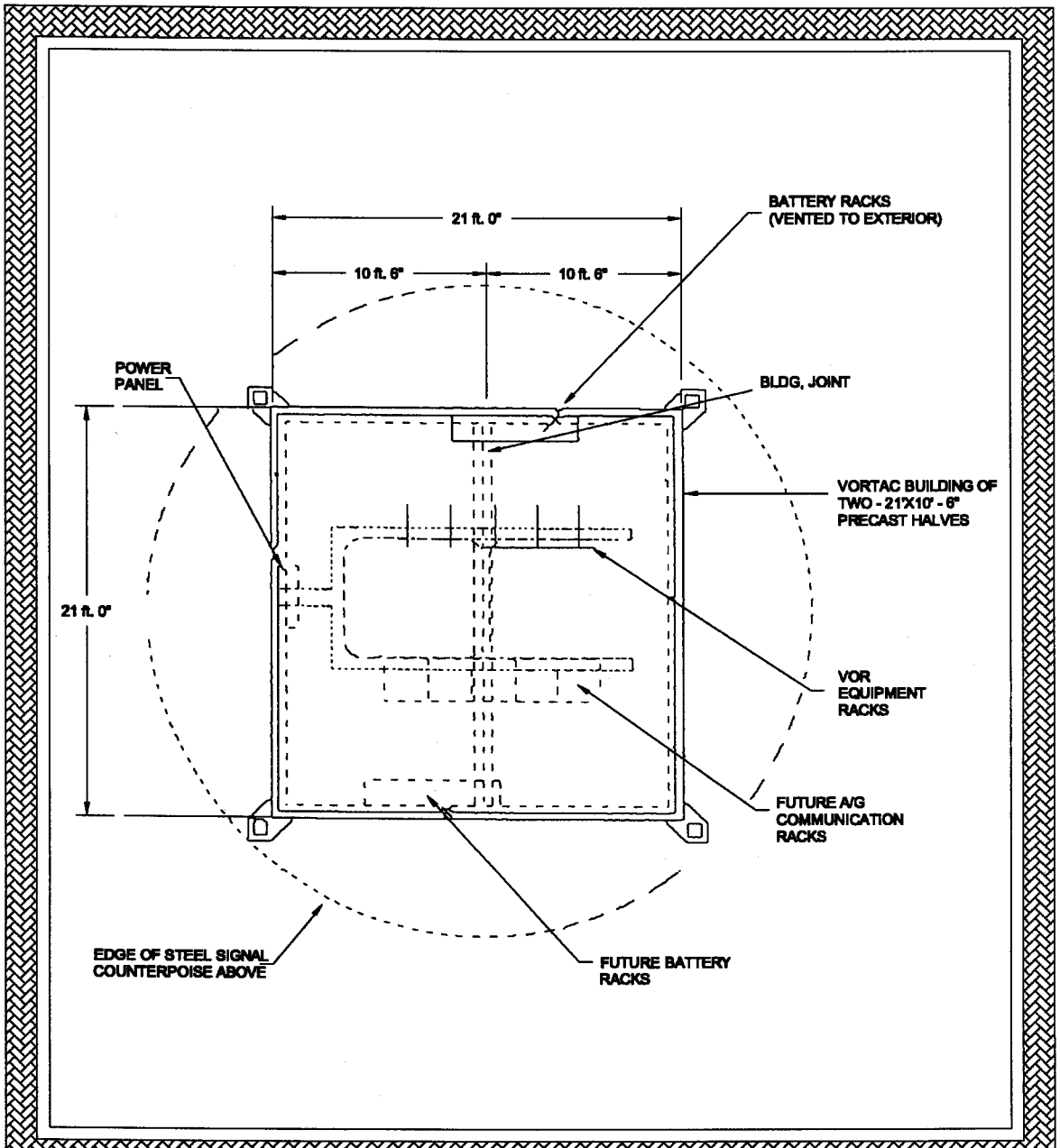

FIGURE 2-20. RCF/RCL COLLOCATED IN A 14' X 26' BUILDING

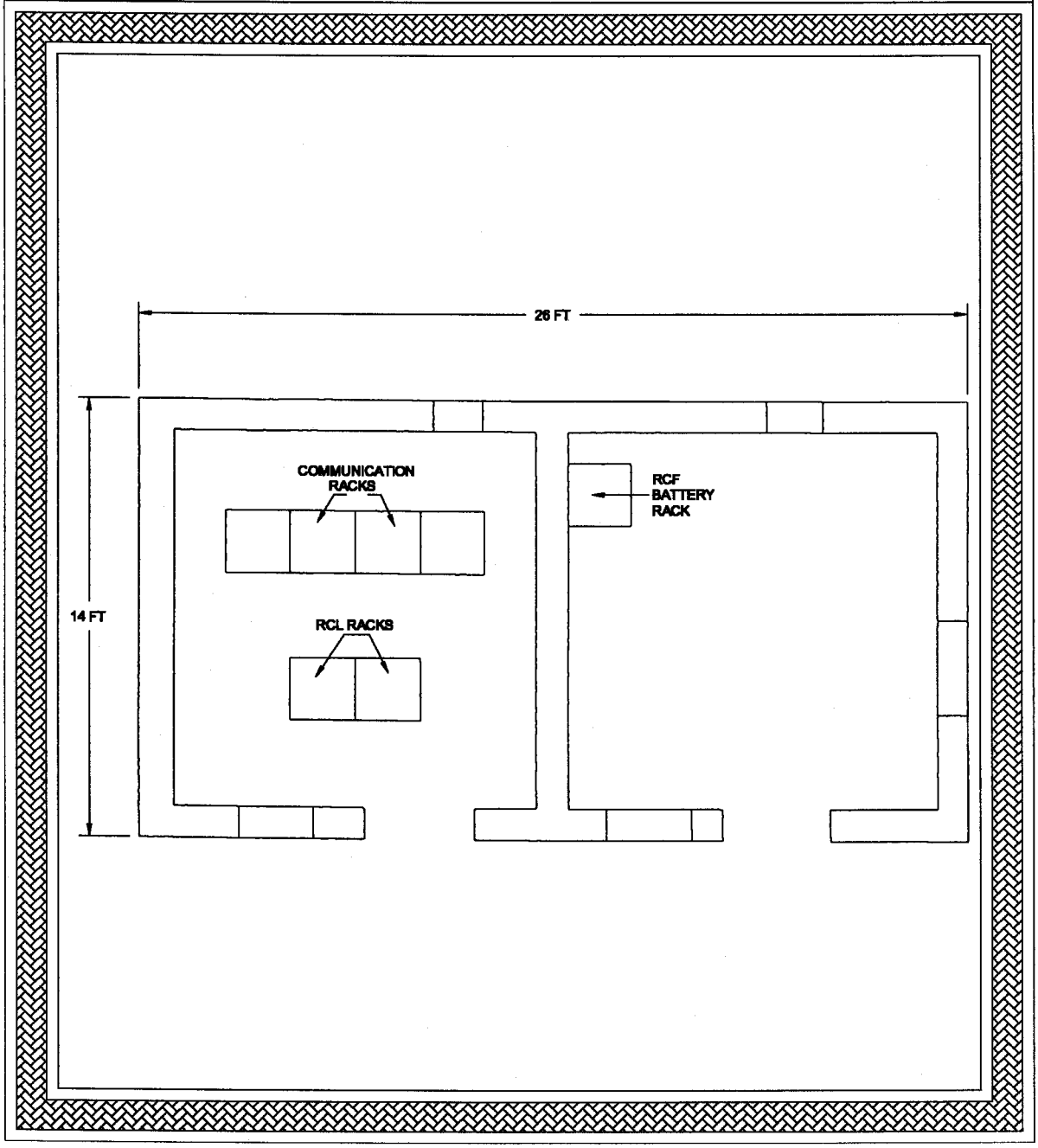

(1) Figure 2-20, RCF/RCL Collocated in a 14'x 26' Building, shows communications equipment racks collocated in an RCF building.

(2) Figure 2-21, Small 10'x 14' RCL Building, shows the layout of a small building.

56. **Reserved.**

57. **Reserved.**

58. **Reserved.**

59. **Reserved.**

60. **Reserved.**

FIGURE 2-21. SMALL 10' X 14' RCL BUILDING

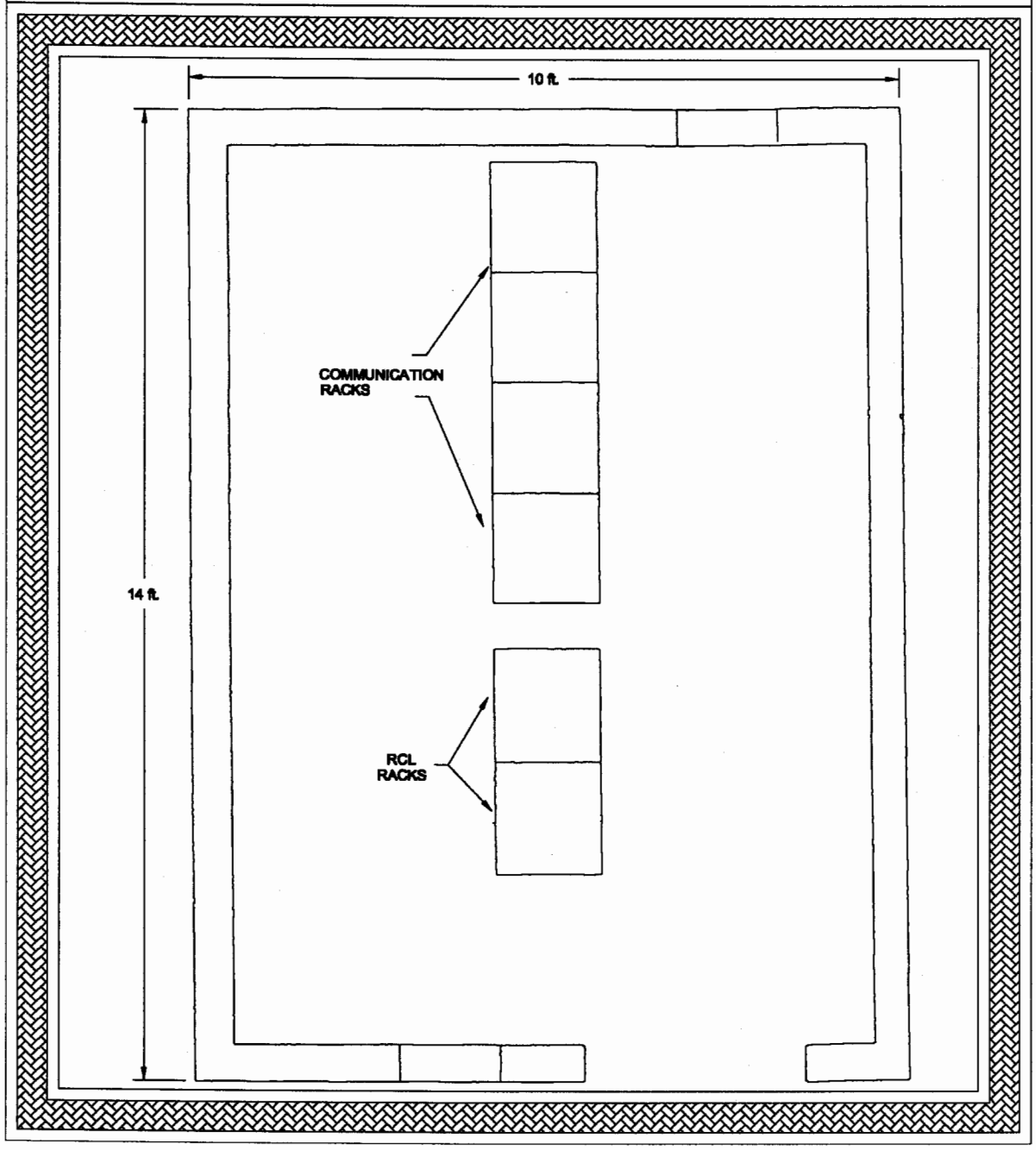

CHAPTER 3. MANAGEMENT OF RCF

SECTION 1. ADMINISTRATIVE

61. GENERAL.

Several administrative tasks need to be accomplished before the actual installation takes place at any RCF. These tasks include the acquisition of land, appropriation of funding, filing environmental impact statements, and securing permits to construct new sites or to modify existing sites. The following sections will address these tasks.

62. NOTICES TO AIRMEN.

Notices To Airmen (NOTAM) may be used for various actions or pending actions.

a. Shutdown NOTAM. The extended shutdown of commissioned facilities undergoing extensive equipment changes, additions, or modernization necessitates the issuance of an advance SHUTDOWN NOTAM. Advance NOTAMs, whenever possible, are normally issued by the regional office where more effective coordination with other groups is possible. This authority may be delegated by the regional office to field installation personnel when the actual shutdown date is contingent upon work progress.

b. Return to Service NOTAM. A return to service NOTAM is issued by the regional office after work done to an existing site is completed. A Joint Acceptance Inspection (JAI) may be necessary before a "return to service" NOTAM can be issued.

c. Commissioning NOTAM. A commissioning NOTAM is issued by the regional office when a new facility is completed or an existing facility undergoes significant changes. This requires the successful completion of a JAI prior to issuing the NOTAM.

63. PLANNING.

a. Land Acquisition and Real Estate Requirements. Many RCF facilities will be collocated at existing host facilities. When this is not feasible, however, it will be necessary to construct a new facility. Proposed RCF facilities require siting and possible land acquisition. This process includes submitting a legal description and a plot of the site including access roads and utility easements. Proof of conformance to zoning restrictions is also required. This document must be presented prior to requesting the acquisition of property rights. All transactions for acquiring property rights, whether for purchase, lease, or use restrictions, are governed by FAA Order 4660.1, Real Property Handbook. These transactions are handled by FAA real estate office personnel. Coordinate

with FAA real estate personnel is required to identify real estate requirements early in the project planning process.

(1) Environmental Due Diligence Audit (EDDA). FAA Order 1050.19A, Environmental Due Diligence Audits in the Conduct of FAA Real Estate Property Transactions, 15 Oct 2003, requires that FAA conduct an EDDA investigation for all property transactions, including obtaining leases. An EDDA is an investigation of existing environmental conditions at a property to evaluate the potential for the existence of hazardous substances. This is used, along with other considerations, to decide the site's suitability to be acquired or disposed of by the FAA. An EDDA investigation focuses on current on-site conditions resulting from past operations.

(2) Environmental Baseline Study (EBS). Acquiring a lease or other land transfer on military land requires the military's equivalent of the FAA's EDDA investigation called an EBS. The U.S. Air Force also requires the FAA to obtain an EBS if changes to a facility, such as removing or adding equipment or installing underground power lines, are required.

b. Environmental Planning Review. All proposed federal projects require a planning review to identify environmental requirements. Environmental planning reviews should be conducted early in the project planning process to mitigate potential delays.

(1) NEPA (National Environmental Protection Act) Review. FAA Order 1050.1E, *Environmental Impacts: Polices and Procedures*, 8 June 2004, requires that all FAA actions (projects) consider environmental impacts of their proposed actions ("Look before you leap"). A NEPA review focuses on future on-site and off-site impacts of proposed construction and operation. A NEPA review can result in either a categorical exclusion (CATEX) or environmental assessment (EA) decision. A CATEX means no further environmental review is required. With an EA an environmental impact statement (EIS) is prepared or a finding of no significant impact (FONSI) results.

(2) Permitting and Inter-agency and Public Coordination. All FAA projects must adhere to federal, state and local requirements, such as wetlands permitting for fill activities, State Coastal Consistency Reviews for proposed projects along the coastline, and other permits, as applicable.

c. Funding. When land is to be purchased for a new facility site, funds for the purchase shall be included in the region or center facilities and equipment (F&E) budget in the same fiscal year as the funds for the facility equipment, installation, and building. This amount is an estimate of the value of the land rights to be acquired, plus acquisition costs and a 15 to 20 percent contingency. If the real estate is to be leased, F&E funding must be provided to pay for the first 12 months of the lease. Contact your FAA real estate office for assistance in determining a cost estimate for lease or purchase of land. This estimate should be included in

the budget estimate that is submitted via the NAP process. (See http://nap.faa.gov).

d. Determination of Need to Acquire. All acceptable sites which are found acceptable for the efficient operation of the facility must be considered. Before any action has begun to acquire new land, a determination must be made that the requirements cannot be satisfied by use of property already held by the FAA, property which is accessible to other Government agencies, public land, exchange of Government-owned property for privately-owned property, or the use of existing rights-of-way and easements when available at a nominal cost or less.

e. Acquiring leased telecommunications service. Cost estimates for additional telecommunications requirements must be factored into the future budget items. For new circuit requirements, F&E funding must be provided to pay for the remainder of the fiscal year after commissioning of the new facility, plus one full year beyond that, in accordance with FAA Order 2500.8.

f. Acquiring utility leases. Cost estimates for utility requirements for newly established facilities must be factored into the future budget items. F&E funds must be available to pay for utility leases for the remaining period of the FY after the commissioning of the new facility plus the following FY to allow time for operational support to include in their FY budget.

64. TASKS.

a. Site Investigation. Prior to conducting investigations and tests, the legal right to enter and use the land must be obtained in writing from the landlord and, if appropriate, the right to clear or otherwise change the character of the land must also be obtained. If verbal authorization is granted, confirmation must be made in the form of a letter with a return receipt. When a landowner will not grant a right of entry, a right of entry must be obtained through the United States (U.S.) courts. Local U.S. attorneys should be consulted through regional counsel in these instances. Contacts with landowners should generally be made by FAA real estate personnel, and when contacts are made by others they must be under the direction of the FAA real estate office.

b. Environmental Impact Statements. Environmental Impact statements (EIS), or a Finding of No Significant Impact (FONSI) shall be approved before negotiations for the acquisition of any land interest begin. Real estate files should contain a copy of the EIS, FONSI, or a reference to the office of record.

c. Land Office Survey. It is of prime importance to identify the owners of the land for all candidate sites and obtain the addresses through which they may be contacted. The legal description of land can usually be

obtained locally from the city, township, or county clerk's office. Whenever possible, a copy of the deed(s) or other appropriate documentation showing land ownership should be attached to the site survey report. Land adjacent to the proposed sites may be affected by the site zoning restrictions. These restrictions may be determined during the office survey, so that the ownership information of this type of land may also be included in the site survey report.

d. Temporary Agreement. Once the site surveys are completed and it has been decided to field test a specific candidate site, a temporary agreement must be entered into with the property owner(s). This agreement (Permit to Test, Testing License, etc.) will secure entry and access to the property for setting up a portable RCF and testing the site. Contact the regional real estate office of the Logistics Division for specific details concerning these agreements.

e. Zoning Restrictions. When the temporary agreement is secured, the landowner(s) should be made aware that zoning restrictions will be required if the site is actually selected and will reduce the possibility of complications during lease negotiations.

f. Temporary Permits. Temporary permits to utilize access roads of adjacent property owners shall also be obtained prior to site testing. An easement is often all that is required to install a permanent access road to a facility, making the actual purchase of land for this purpose unnecessary. Leases or other agreements, as required, should be entered into with appropriate governing agencies or property owner(s) for the use of existing roads. The regional real estate office of the Logistics Division should be contacted for appropriate procedures for entering into such agreements.

65. Reserved.

66. Reserved.

67. Reserved.

68. Reserved.

69. Reserved.

SECTION 2. TECHNICAL

70. GENERAL.

The RCF may be a stand-alone facility or it may be collocated with an FAA-owned host facility, i.e., a control facility, NAVAIDS facility, radar facility, or a RCL. Important attributes to consider when selecting an RCF site include the surrounding topography, ground conductivity, and the amount of ambient electrical noise. An RCF site must be capable of transmitting and receiving a usable signal within its service volume area. Since site conditions may have an adverse impact on the performance of NAVAIDS, radar, or other host facility equipment, coordination is required between the respective program managers of the collocated facility types.

71. DESIGN CONSIDERATIONS.

The primary concern of those responsible for siting an RCF is the awareness of potential interference generated in the environment of the proposed site. If the interference encountered during the selection process exceeds the maximum allowable levels, the site shall be removed from the list of candidates.

a. Electromagnetic Interference. EMI is the unintentional radiation from equipment such as microwave ovens, industrial heaters, welding equipment, electronic door openers, etc. The regional spectrum engineering office reviews all requests by commercial interests to install RF emitting equipment in the proximity of FAA facilities.

b. Electromagnetic Compatibility (EMC)/RFI. Licensed radio equipment shall be engineered and installed so that no radio interference is experienced at the input to the RCF receivers. The maximum allowable undesired signal level at the input of the RCF receivers from any licensed station is -104 dBm for signals within VHF and UHF bands, and -45 dBm for signals outside the A/G communications RF bands.

(1) RF Interference. Interference pertaining to RF transmitter and receiver sites can be classified as transmitter noise, receiver desensitization or intermodulation distortion.

(a) Transmitter Noise. This is the sideband noise energy produced by a transmitter. When a transmitter is collocated with a receiver, transmitter noise may cause reduced receiver performance when the noise is greater than the receiver's sensitivity.

(b) Receiver Desensitization. This occurs when an adjacent signal from a nearby transmitter is sufficiently close to a receiver's operating frequency. The unwanted signal passes through the RF section of the receiver with insufficient attenuation such that the receiver automatic gain control (AGC) reacts to the signal. The gain of the receiver is reduced,

thereby limiting its performance. A transmitter can be operating several megahertz away from the receiver frequency and/or its antenna can be located several thousand feet from the receiver's antenna and still cause "desense" interference.

(c) **Intermodulation Interference.** This nonlinear distortion occurs when the transmitter's output contains harmonics of the input frequencies.

(2) **Transmitter Generated Noise.** The four basic transmitter generated interference sources that can affect communications receivers are shown in the following list.

(a) Transmitter sideband energy.

(b) Spurious transmitter modulation.

(c) Overmodulation of the carrier.

(d) Intermodulation.

(3) **Thermal Noise.** Receiver sensitivity is theoretically limited to thermal noise which is present in all dissipative materials. Shot noise is also present and is a byproduct of current flow. In some instances pre-selectors used in front of a receiver may introduce noise into the system. Bandpass filters having very steep skirts are used at congested sites to accommodate multiple receivers and transmitters. Use of these devices can decrease the signal to noise ratio at the front end of the associated receivers. Proper engineering and judicious use of these devices should be followed to avoid degradation of receiver performance.

c. **Siting Criteria.** The primary purpose of selecting a site is to provide effective service volume coverage for ATC communications. There are three site characteristics that must be evaluated when selecting a site for A/G communications: surrounding terrain, ground conductivity, and ambient RF noise.

(1) **Surrounding Terrain.** The topography near the site should not limit radio line of sight. Perfect optical line of sight, although desirable, is not necessary since some refraction takes place at VHF and UHF frequencies. Flat terrain requires evaluation of the effect of ground reflections on the vertically polarized A/G communications signals. Ground reflections predominantly affect A/G communications with high flying aircraft. A concern in evaluating refractions is the effect of terrain at low angles which affects communications with aircraft flying at low altitudes and at maximum range. The lowest altitude will generally be 1,500 feet.

(2) **Ground Conductivity.** Good ground conductivity will improve the low altitude RF coverage at great distances from the site. Conductivity of

the soil at a distance of three to five wavelengths around the site is considered good if it is between 0.01 to 0.02 mho per meter. Typical ground conductivity for various types of soil and water is shown in Table 3-1, Typical Electrical Parameters for Earth and Water. Refer to paragraph 127, chapter 4, for measurement method guidance. A system of ground conductors can be installed to improve the ground plane near the site if the ground conductivity is less than desirable. The conductors that form the counterpoise/ground plane must not be spaced more than 0.1 wavelengths from each other at the lowest operating frequency. This means separation can be no more than 10 inches if the lowest operating frequency is 118 Megahertz (MHz). Adding moisture-retaining plants and shrubs near the site will improve ground conductivity by increasing the moisture content of the soil. This strategy can be used if ground conductivity is only marginally low. Refer to paragraph 91, Chapter 4, for conductance enhancement guidance.

TABLE 3-1. TYPICAL ELECTRICAL PARAMETERS FOR EARTH AND WATER

EARTH TYPE	CONDUCTIVITY (ó)	PERMITTIVITY(ë)
Poor	0.001	4.0 to 5.0
Moderate	0.003	4.0
Fair	0.01	15
Average	0.005 to 0.03	10 to 15
Good	0.01 to 0.02	4.0 to 30
Dry	0.00001 to 0.001	2.0 to 5.0
Land	0.002	15
Desert	0.01	3.0
Dry, Sandy, Flat-Tyoical Coastal	0.002	10
Flat, Wet, Coastal Region	0.01 to 0.02	4.0 to 30
Dry Sandy Soils	0.001	10
Pastoral Land	0.005	15
Pastoral Hills, Rich Soil	0.003 to 0.01	14 to 20
Pastoral Medium Hills & Forest	0.004 to 0.006	13
Fertile Soil	0.002	10
Rich Agri. Land (Low Hills)	0.01	15
Rocky Land (Steep Hills)	0.002	10 to 15
Highly Moist Soil	0.05 to 0.02	30
Wet Soil	0.001 to 0.1	5.0 to 30
Marshy Soil	0.1	30
Marshy, Flat (Defense Woods)	0.0075	12
Marshy, Forested, Flat	0.008	12
Low Hills w/Unforested Rich Soil	0.01 to 0.02	4.0 to 30
Mountainous, Hilly (-1000 Meters)	0.001	5.0
Urban Industrial (Avg. Atten.)	0.001	5.0
Urban Industrial (Max. Atten.)	0.0004	3.0
Urban Industrial	0.0001	3.0
Fresh Water	0.001 to 0.01	80 to 81
Fresh Water (10° C at 100.0 MHz)	0.001 to 0.01	84
Fresh Water (20° C at 100.0 MHz)	0.001 to 0.01	80
Sea Water	3.0 to 5.0	80 to 81
Sea Water (10 ° C at Up to 1.0 GHz)	4.0 to 5.0	80
Sea Water (20 ° C at Up to 1.0 GHz)	4.0 to 5.0	73
Sea Ice	0.001	4.0
Polar Ice	0.000025	3.0
Polar Ice Cap	0.0001	1.0
Arctic Land	0.0005	3.0 to 5.0

(3) **Ambient RF Noise.** Both the VHF and UHF A/G communications bands used by the FAA are in a heavily used portion of the radio spectrum. This, coupled with atmospheric noise and manmade noise, contributes to the ambient noise level at A/G communications sites. Typical ambient RF noise levels between 100 Kilohertz (kHz) and 10 Gigahertz (GHz) are shown in Figure 3-1, Typical Average Ambient Noise Level. A noisy RF environment can reduce the effective receiver range at a site. This effect is because the RF noise can mask the desired signals. Also, a receiver's squelch circuit must be set higher than the ambient RF noise level to be effective. The higher the RF noise level, the higher the squelch setting and the stronger the desired signal has to be in order to be received. An evaluation of the RF noise level at a prospective site should be done prior to site selection.

FIGURE 3-1. TYPICAL AVERAGE AMBIENT NOISE LEVEL

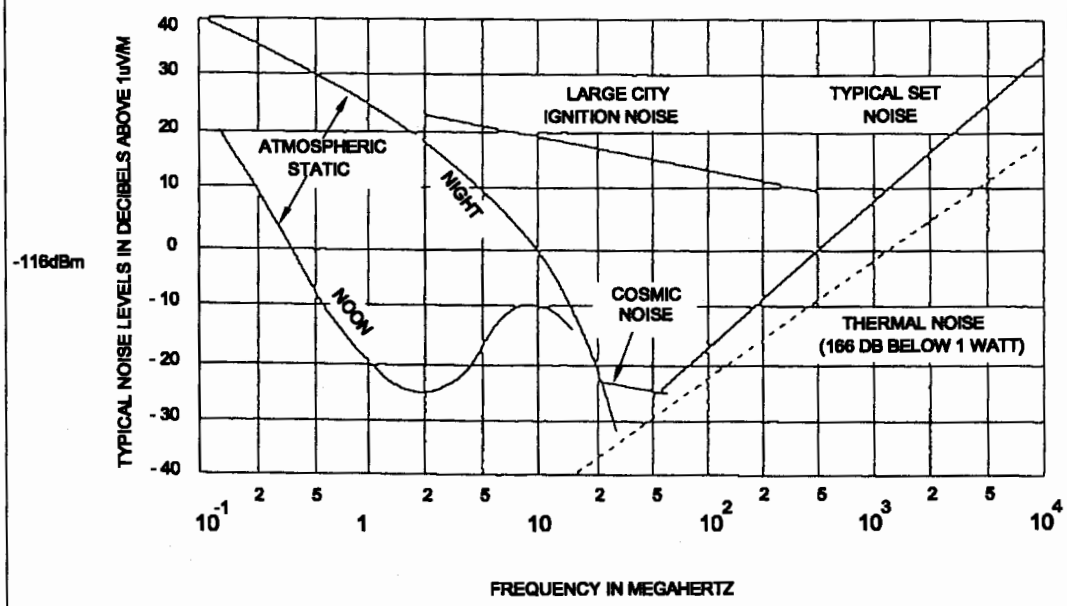

72. INSTALLATION.

Installation of equipment at an RCF is the responsibility of FAA service area personnel or their contractor installation teams. Management of and responsibility for installation may differ depending on whether FAA personnel or contractor personnel are used. Onsite responsibilities for the pre-installation, installation, checkout, verification, and acceptance of the RCF are divided among the various categories of management. Installation responsibilities are divided among the service area, RCF project coordinator, the installation team leader, System District Office and the installation team in accordance with the engineering work order. The onsite assignment of responsibilities of each is general in scope.

a. Washington Office RCF Program Manager. The Solution Implementation Group is primarily responsible for the Facilities and Equipment (F&E) planning and funding. A/G Comm. upgrade or establishment needs are entered into the Needs Assessment Program (NAP) tool which will then be tracked, validated, or nonvalidated at the Facility Manager, Service Area, and Service Unit Levels. The CWP toolset then integrates cost estimates, site requirements, schedules, and coordination of Service Area planning into the CWP and initiates the requests for National equipment procurements.

b. Program Implementation Manager. The Program Implementation Manager is primarily responsible for the management of the region's RCF program. This includes initiation of regional actions to implement the RCF program, coordinating material, and site planning. The following are also regional office coordinator responsibilities.

(1) Site preparation prior to the arrival of the installation crew.

(2) Pre-installation testing and verification of the existing equipment.

(3) Completion of all pre-installation tasks.

(4) Assistance to the Technical onsite Representative (TOR) and contractor or FAA installation team.

(5) JAI.

(6) Local procurements.

c. Sector Office Management. Sector office management provides personnel and equipment under the guidance of the TORs FAA installation team leader. Following are tasks supported by the sector office:

(1) Facility shutdown,

(2) Facility return to service or commissioning.

d. TOR's Responsibility. The TOR is the coordinator for the entire onsite contractor installation process and is responsible for ensuring completion of the tasks. Duties include, but are not limited to, verifying the proper pre-installation, installation, checkout, and acceptance of the RCF equipment installation. The TOR will maintain a site log of the installation history. This log includes daily entries for arrival and departure time of contractor personnel, and logging of problems concerning installation, configuration, administration, and management during the project. This log can be used for cross- checking and verifying the contractor's log. Specific duties of the TOR are to ensure that the contractor's tasks listed in subparagraphs (1)-(4) are performed.

(1) Establish and maintain a contractor site log.

(2) Verify and update equipment configuration data.

(3) Install, adjust, and align equipment in accordance with FAA approved technical instruction manuals.

(4) Conduct acceptance tests, Contractor Acceptance Inspections (CAI) and JAI in accordance with FAA instructions and Orders, such as JAI FAA Order 6010.7.

(5) Complete all necessary forms and records required for facility return to service or commissioning.

The TOR is responsible for ensuring that:

(6) Access to the site is available to the contractor.

(7) Necessary equipment is available to the contractor.

e. Installation Team Leader. The installation team leader is the FAA installation team coordinator for the onsite installation process. It is the responsibility of the team leaders to verify the proper pre-installation, installation, checkout, and preparation for acceptance of the RCF equipment installation. The team leader's duties are similar to those of the TOR. Supervision by the team leader, however, is limited to the FAA installation team.

f. Installation Team. The installation team is responsible for installation of new equipment in accordance with the instructions of the work order. The installation team is also responsible for the removal and proper packaging for shipment of any old equipment removed during the installation process. Additional duties include the following:

(1) Establish and maintain regional documentation.

(2) Verify equipment configuration and individual serial numbers.

(3) Assist in conducting acceptance tests and logs results in accordance with FAA approved methods.

73. TESTING AND EVALUATION.

Final testing, evaluation, and acceptance shall be accomplished in accordance with FAA Order 6030.45, Facility Reference Data File, which describes the CAI and JAI in accordance with FAA instructions and Orders, such as JAI FAA Order 6010.7. FAA Form 6030-17, Technical Reference Data Record, shall be used to record test data. The contractor is obligated to correct all discrepancies found during the CAI. The contractor is under no further obligation after the JAI is accepted by the FAA. A list shall be kept of all exceptions from the JAI checklist along with its status. The regional office is responsible for the planning and monitoring of this effort. Further details on testing and evaluation of installations are found in Chapter 7, System Test and Acceptance.

74. Reserved.

75. Reserved.

76. Reserved.

77. Reserved.

78. Reserved.

CHAPTER 4. GROUNDING AND LIGHTNING PROTECTION

SECTION 1. GENERAL REQUIREMENTS

79. GROUNDING SYSTEM.

Compliance with the RCF grounding and lightning protection requirements provides protection to equipment, improved operation of the communications equipment, and safety to the operators. The reason for installing a ground system for lightning protection is that a lightning discharge cannot be prevented. On the other hand, however, the damage caused by lightning can be minimized. The benefits of a good ground system are realized in the ability to route lightning currents so that equipment is not damaged and personnel are not harmed. A complete, properly installed ground system is the only way to control the current path of a lightning discharge. This is a much better scenario than being unprepared for a lightning discharge which has the potential to render the site inoperative and injure personnel. The ground system also contributes to the reduction of EMI/RFI and improved EMC. Transmitters and receivers require a good ground reference in order to perform at their designed specifications. Antenna systems also require a properly installed ground system in order to produce the specified radiation pattern. The detrimental effects of ground reflections on RF coverage are increased when an antenna system is not provided with a proper ground system. The major subsystems of the grounding system are the earth electrode system, lightning protection system, multipoint grounding system, and single point ground system. This chapter will provide instructions for meeting the grounding and lightning protection requirements specified in FAA-STD-019, Lightning Protection Grounding, Bonding, and Shielding Requirements of Facilities. If there is a discrepancy between this order and FAA-STD-019 the latter will prevail.

80. GROUNDING SYSTEM TERMINOLOGY.

Previously, many terms were used interchangeably. For consistency, underlined titles below are the terms this text will use other terms listed are for reference only.

a. Earth Electrode System Ground. Other terms commonly used were earthing conductors, counterpoise ground, ring ground, station ground, grounding electrode, and facility ground.

b. Multipoint Ground. Other terms commonly used were high frequency ground, equipment ground, chassis ground, and frame ground.

c. Single Point Ground. Other terms commonly used were low frequency ground, signal ground, and signal reference ground.

d. Protection Ground. Other terms commonly used were safety ground, ground fault protection system, AC ground, and power ground.

81. GROUNDING SYSTEM DESCRIPTIONS.

RCF facilities contain several identifiable grounding systems. These are described in the following.

a. Earth Electrode System. The earth electrode system is a network of electrically interconnecting rods, plates, piping, incidental electrodes (metallic tanks), cables or grids installed below grade external to the facility. The earth electrode system shall provide an electrical connection to earth with an earth-to-electrode resistance. The earth electrode system is connected by a single large cable to the internal facility main ground plate providing a common, low resistance electrical path to earth ground.

b. Lightning Protection System. A lightning protection system shall be provided for all structures through the use of air terminals and their associated down conductors, which provide a low resistance electrical path to the earth electrode system. Transient and surge suppressors shall be used on incoming facility conductors and on cables interconnecting widely separated equipment or facilities in order to prevent damage from lightning induced power surges. The lightning protection system electrical path shall exhibit a low impulse impedance to reduce transient potentials and provide high power transfer capability to dissipate energy to earth.

c. Multipoint Grounding System. An internal facility grounding system shall be implemented with a multipoint grounding system. This system provides low resistance, high frequency multiple electrical paths to the earth electrode system. All equipments and chassis grounds shall be connected to this system. The reference color for the multipoint ground conductor is green with an orange tracer. The grounding system shall provide a low resistance return path for electrostatic charge and potential differences on chassis ground to near earth potential. A typical grounding system is illustrated in Figure 4-1 Typical Facility Grounding System. This system should be designed and installed per FAA-STD-019.

d. Single Point Ground System. If required by communications equipment, a single point ground system shall be provided by an isolated and separate electrical path grounding system. This system should be designed and installed per FAA-STD-019. A single point ground provides a separate low resistance, low frequency path via the main ground plate to the earth electrode system. The reference color for the signal ground conductor is green with a yellow tracer. The single point ground system shall provide a ground reference for signal voltages and a low resistance conductor path to ground independent of static charges common in alternating current (AC) power and equipment protective ground.

e. Protection Ground. The protection ground shall be provided by a separate path grounding system. This ground shall be part of the AC power wiring system and shall be included with all AC voltage conductors (black and white) as the third (green) wire. The protection ground provides

protection to personnel and equipment from electrical distribution faults or unintentional connections. The protection ground system shall join the electrical neutral at the service disconnecting panel. This system should be designed and installed per FAA-STD-019.

FIGURE 4-1. TYPICAL FACILITY GROUNDING SYSTEM

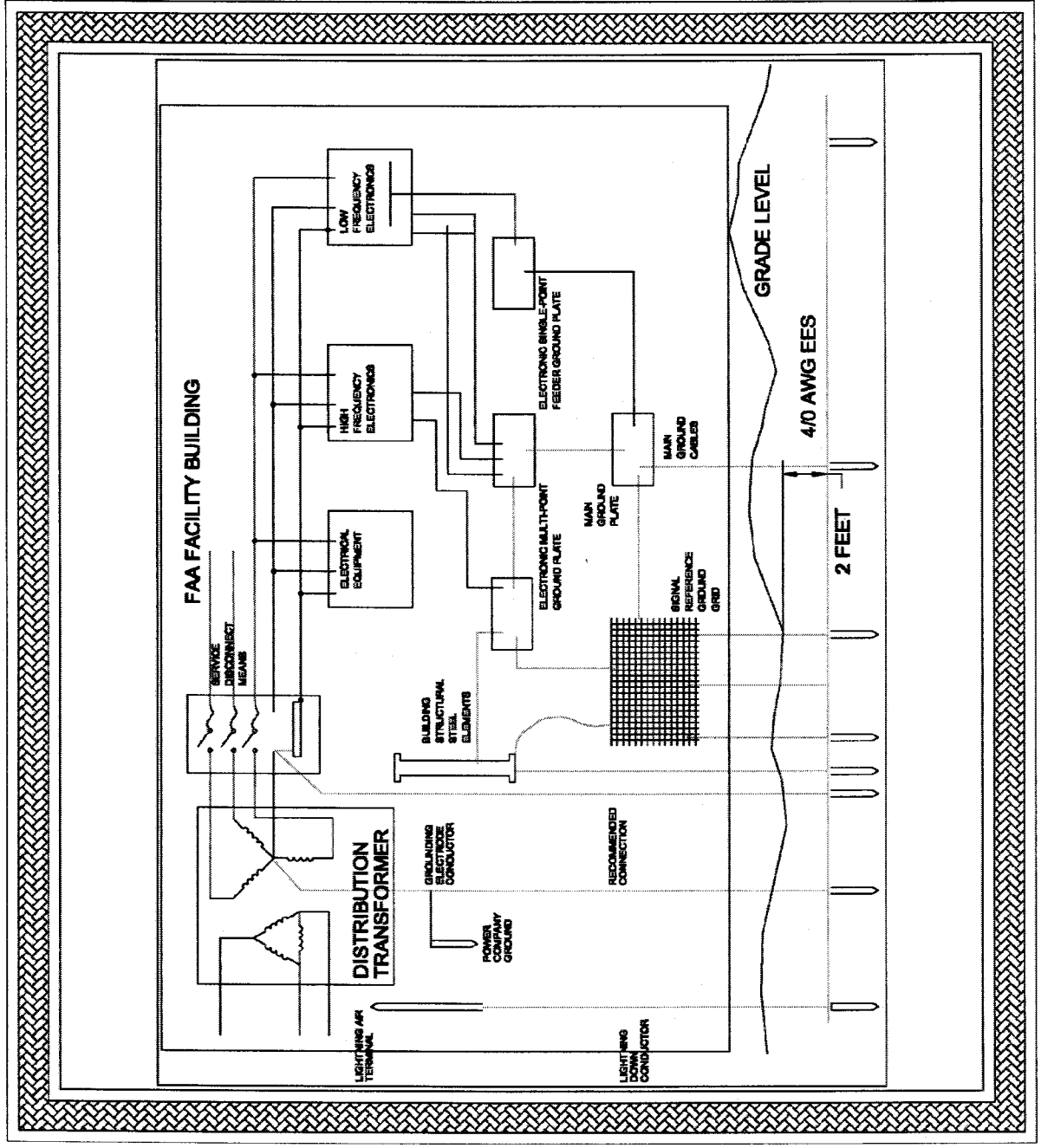

82. EMI.

EMI is a term used generally to include all applicable interference to electronic equipment. Included also are the terms RFI, Electromagnetic Pulse interference (EMP), and equipment characteristics of EMC. This system should be designed and installed per FAA-STD-019. Requirements for compliance and testing are found in the following specifications, standards (STD) and manuals:

a. FAA-G-2100, Electronic Equipment, General Requirements.

b. FAA-STD-019, Lightning and Surge Protection, Grounding, Bonding and Shielding Requirements for Facilities and Electronic Equipment.

c. MIL-STD-461, Electromagnetic Emission and Susceptibility Requirements for the Control of Electromagnetic Interference.

d. MIL-STD-462, Electromagnetic Interference Characteristics, Measurement of.

e. MIL-STD-463, Definitions and System Units, Electromagnetic Interference and Electromagnetic Compatibility Technology.

f. MIL-STD-454, Standard General Requirements for Electronic Equipment.

g. NTIA Manual, National Telecommunications and Information Administration, Regulations and Procedures for Radio Frequency Management.

83. TRANSIENT PROTECTION.

Surge and transient protection shall be provided on all coaxial cables, paired signal landlines, and AC power lines entering or leaving a facility or interconnecting widely spaced equipment within a facility. The facility grounding system is a vital part of equipment, coaxial cable, and signal landline protection. The AC power ground must meet the National Electric Code (NEC) Article 250 requirements. This system should be designed and installed per FAA-STD-019.

84. Reserved.

85. Reserved.

86. Reserved.

87. Reserved.

SECTION 2. EARTH ELECTRODE SYSTEM

88. GENERAL.

The RCF equipment requires an effective earth electrode system for the facility to function properly. The earth electrode system provides a source of ground potential so that all ground conductors connected to it safely dissipate stray currents. The earth electrode system for the RCF shall be in accordance with FAA-STD-019. If an RCF is collocated with a host facility such as a NAVAIDS or radar site, for example, and the host facility meets the requirements of FAA-STD-019, the RCF shall utilize the host facility's earth electrode system. If the host facility does not have an earth electrode system which meets the standards, the earth electrode system shall be upgraded.

89. ENVIRONMENTAL CONDITIONS EVALUATION.

The following conditions shall be ascertained before a new ground system is planned for an RCF.

a. Type of terrain; i.e., soil or rock.

b. Type and condition of subterranean soil.

c. Location of site; i.e., wetland or flood zone.

d. Depth of frost line.

Normally, this information is readily available for an existing site; however, a new site may require borings to determine the condition of the subterranean soil. If a tower is planned for a new site, soil borings will have to be done prior to designing the tower foundation. The information gathered from these borings is adequate for assisting in the design of an earth electrode ground system. When a communications tower is not planned, soil borings shall be done in the vicinity of the planned RCF.

90. EARTH RESISTANCE.

Earth resistance test measurements shall be made of the surrounding earthen area of the site where the earth electrode system is to be installed. An earth electrode ground system resistance of typically 10.0 ohms or less to ground needs to be established for proper operation. Several options can be implemented regarding the type of ground system to use and treatment of the soil if measurements show that the required predicted earth resistance is not met. Analyses and calculations are contained in FAA Order 6950.19, Practices and Procedures for Lightning Protection, Grounding, Bonding, and Shielding Implementation.

91. DESIGN PARAMETERS.

The elements of an earth electrode system are the ground conductors and the earth penetration devices. These elements are in the form of copper wire conductors and copper rods, which are placed under ground, above ground, around structures and around towers. This grounding system is connected to the structure and tower air terminals, structure steel, fuel tanks, water lines, facility main ground plate and the AC power system neutral. The type of earth electrode system used will differ in design depending on the conditions at the site. When an RCF is located on a rock surface, the usual method of sinking rods into the ground and burial of conductors to provide earth ground will not be possible. In this instance, a ground plane over the rock surface shall be constructed. Chemical enhancement of the soil can be used to increase conductivity of the ground system when soil conditions make it impossible to achieve an earth-to-electrode resistance of 10.0 ohms or less.

a. Ground Rod System. The standard RCF earth electrode system consists of ground rods, grounding conductors, an earth electrode counterpoise, and a main ground plate. The earth electrode counterpoise is the underground interconnecting conductor. Typical ground rods should be composed of copper-clad steel or solid copper and should be a minimum of 10 feet long and 3/4 inch in diameter. They should have a threaded end so that more than one rod may be connected together where applicable for deeper penetration into the earth. The earth counterpoise conductor shall be positioned at least 2 feet below the ground surface. The tops of ground rods shall not be less than one foot below the ground surface. All connections to the earth electrode system shall be exothermic welds. The earth electrode system shall have a resistance in the earth of 10.0 ohms or less, as measured in accordance with FAA-STD-019, and described in section 6 of this chapter.

(1) Depth of Penetration. The depth to which ground rods are driven depends on the conductivity of the soil, the level of the water table at the site, and the distance between rods. Penetration into a permanent water table is most desirable. In northern parts of the country, rods shall extend below the frost line where possible. This could mean driving multiple rod lengths in some instances. Driving a ground rod farther into the soil to reach a water table is recommended when the upper portion of the rod lies in soil with a low moisture content or in poorly conductive soil such as sand or permafrost. If a ground rod assembly is driven deep into good conductive soil, the upper 10 feet will conduct a majority of the initial current. This limits the flow of current further down the rod. Therefore, when soil conductivity and moisture content are high, grounds rods need not extend beyond 11 feet below the surface.

(2) Number of Rods and Spacing. The number of rods used at a site is dependent on the requirement to satisfy the earth-to-electrode resistance. A general rule for determining distance between ground rods is

that the distance between rods shall be greater than their length. The closer the ground rods are spaced, the higher the interconnecting inductance. A chart which compares the change in resistance with respect to the number of rods used and the distance between them is shown in Figure 4-2, Change in Resistance vs. Number and Spacing of Rods.

(3) Interconnection of Rods. The ground rods shall be interconnected with stranded bare copper wire with joints made with exothermic welds. The interconnecting conductor shall be buried at least 2 feet below the surface. In areas where the frost line is below this level, the conductor shall be buried below the frost line, if practical. This system should be designed and installed per FAA-STD-019.

b. Alternative Ground Plane System. An alternative ground plane system uses wires or large copper straps spread out over sandy or rock surfaces in the form of radials. These conductors are buried underground or laid over the surface and anchored with ground rods. The underground conductors are buried at least 2 feet, or below the frost line, which ever is deeper. With the addition of the conducting radials, the rocky surface will carry a surface charge creating a large area over which lightning will dissipate.

(1) Underground System. Horizontal bare conductors buried under the ground in a radial or grid configuration can produce an earth-to-electrode resistance of less than 10 ohms. In poor or layered soil, ground rods may be needed in addition to radials or a grid in order to reduce the resistance. Increasing the number of conductors does not automatically reduce the resistance unless the conductors are spaced to minimize mutual interference between conductors. In addition, the transient impedance of each vertical ground rod and each conductor in a grid must be assessed so the safe limit for step voltage is not exceeded. The underground system designer should refer to FAA Order 6950.20 for more design references.

(2) Above Ground System. Conductors on top of a rocky surface must be made shorter than conductors buried under ground. The accumulated inductance on long conductors limits surge currents from propagating the length of the wire. In this situation, a greater number of conductors of shorter length are needed to satisfy the requirements of the earth electrode system. Flat strap copper is better for the above ground conductors if conditions permit its use.

c. Chemical Enhancement. Chemicals added to the soil to improve conductivity effectively increase the capacity or volume of the soil to dissipate electrical currents from lightning strikes. Chemical additives shall not damage or degrade other portions of the grounding system. Adequate amounts of chemicals should be used to allow for the effects of dilution from rainwater and runoff. Contact your local chemical vendor for specific application to attain the increased soil conductivity. This application will be maintained for 2 to 3 years. Chemical gels shall not be used as a

conductivity enhancement in surface grounding systems at RCF sites. In difficult soils/areas a combination of coke breeze trenches and dissipative plates is highly recommended. Coke breeze is a material that is produced as a by-product of coke production. Coke is used in the smelting of metals. It is mainly fixed base carbon. All the corrosives and volatiles have been cooked off at extremely high temperatures. Coke breeze is environmentally safe, stable, and conductive when completely dry or frozen, non-moisture dependent, compactable and very economical to install. Refer to FAA-STD-019 for installation details.

FIGURE 4-2. CHANGE IN RESISTANCE vs. NUMBER AND SPACING OF RODS

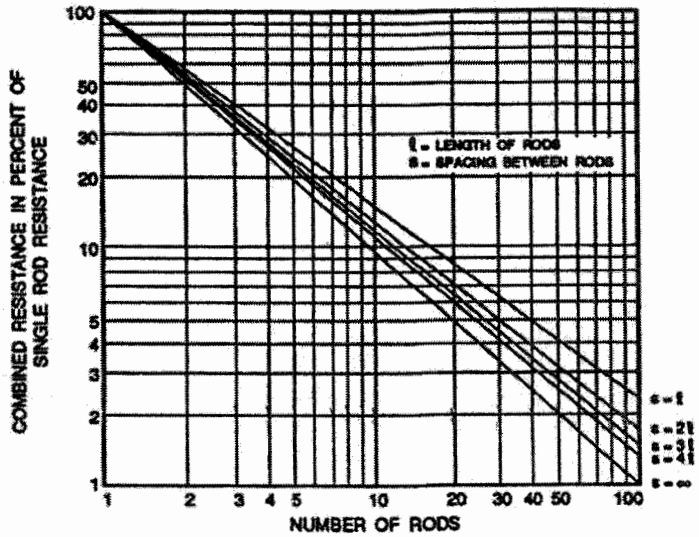

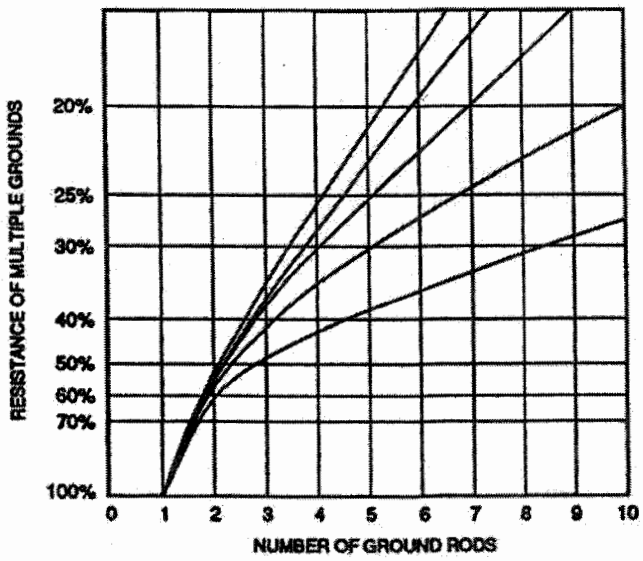

92. INSTALLATION.

a. Pre-installation Tasks. Before work begins, a schedule shall be established so that site excavation will coincide with the hole and trench digging necessary for earth electrode system installation.

b. CAUTIONS. The following task cautions shall be addressed prior to installation.

(1) Prior to upgrading the earth electrode system, if required coordinate all systems shutdowns with all involved parties such as operation centers and air traffic personnel.

(2) To avoid injury to personnel and any possible equipment damage, turn off the AC power at the service entrance disconnect, and if possible, at the transformer.

(3) To avoid damage to existing buried cable, contact the appropriate personnel before digging holes and/or trenches.

(4) Hand digging tools shall be used in uncertain cabling locations to avoid damage to existing buried cable. No power digging equipment shall be used.

c. New Earth Electrode System. Specific site conditions will dictate the type of grounding system applicable to the RCF and the action necessary to meet the required earth-to-electrode resistance.

(1) Ground Rod Location. Ground rods shall be driven into undisturbed or compacted earth. If rods must be located in gravel drainage areas, the rods shall extend at least 8 feet into undisturbed earth beneath the drainage area. The assumption is that the drainage area is dug below the average ground level. In northern areas the ground rods shall be driven so that 10 feet of the rod assembly extends below the frost line. The rods are driven into the earth either by hand or with a driving rig. A driving stud shall be used to protect the threaded end of the rod when it is being driven into the ground.

(2) Interconnecting Cable. Interconnecting cable shall be attached to a ground rod by exothermic welding. Only exothermic welds are used when the interconnecting cable ground rod connections are to be covered with earth or are to be inaccessible. Underwriters Laboratory (UL) approved clamps may be used in an access well, with the exception that a down conductor directly from an air terminal always requires an exothermic weld. Exothermic welds shall be used in access well. An example of a tower and structure earth electrode system is shown in Figure 4-4, Typical RCF Earth Electrode System. While burying cable a guard should always be installed above the buried cable. A colored tracer or tape per ANSI Standard Z53.1 should be installed alongside the guard also, to visibly see the colored alert tagging and prevent inadvertent digging.

(a) Trenches. In new installations a trench is dug for the interconnecting cable around the building from two to six feet from the outside wall. On buildings with overhangs, trenches should be located further out. Another trench is dug up to the facility main ground entrance junction box where the cable will be installed. The trenches are dug 2 feet deep in most cases. In northern areas where the frost line is at a depth greater than 2 feet, the trenches are dug deeper than the frost line.

(b) Rod Connections. Connections to the ground rods are made by exothermic welds using the proper size splicer molds and cartridges. An illustration of the steps involved in this procedure is shown in Figure 4-5, Exothermic welding Process, and Figure 4-6, Ground Rod Welds.

(3) Access Wells. Access to the earth electrode system may be provided by the use of access wells. These wells are constructed of clay or concrete pipe with a hinged or removable cover plate. When an access well is located at the junction of a ground rod and an air terminal down conductor the bond shall be an exothermic weld. When the grounding system is located underneath a structure, the access wells may be located on the inside floor of the structure. One of the wells however, should be located near an area of undisturbed earth so that earth resistance measurements can be made for earth electrode system proof of performance testing. Figure 4-7, Details of Ground Rod/Interconnection Cable Installation, and Figure 4-8, Grounding Access Well Construction, show details of access well installation.

(4) Earth Resistance Measurements. Resistance measurements shall be made as each ground rod is installed to ensure that it meets the requirements for a low-resistance electrical path to ground. If the resistance is greater than required, the rod should be driven deeper into the earth or relocated. In order to drive the rods deeper, section(s) are added as needed by using a coupler attached to the threaded end of the ground rods. Test each ground rod after it is installed using the procedure described in section 7, Testing.

FIGURE 4-4a. TYPICAL RCF EARTH ELECTRODE SYSTEM

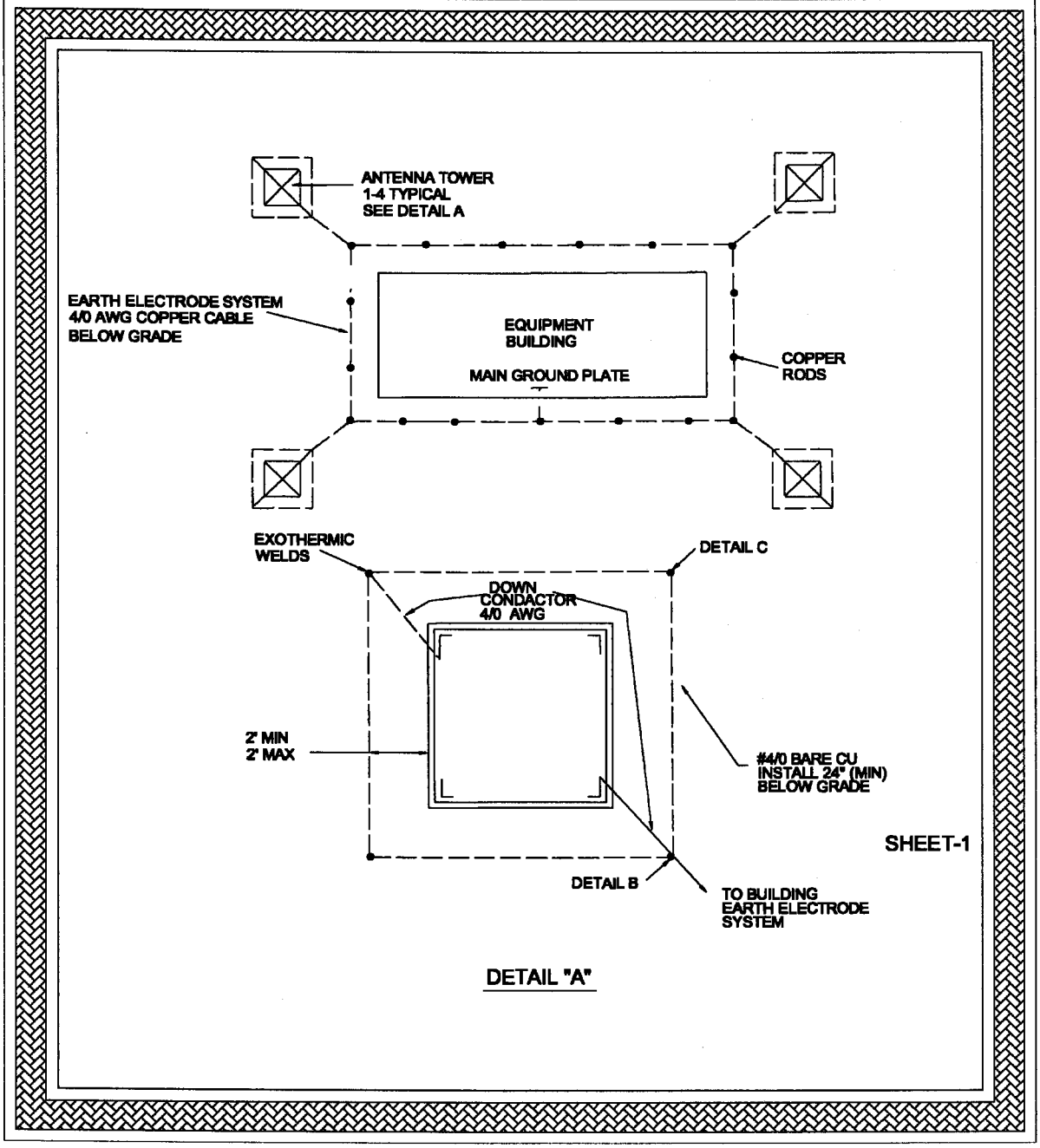

FIGURE 4-4b. TYPICAL RCF EARTH ELECTRODE SYSTEM

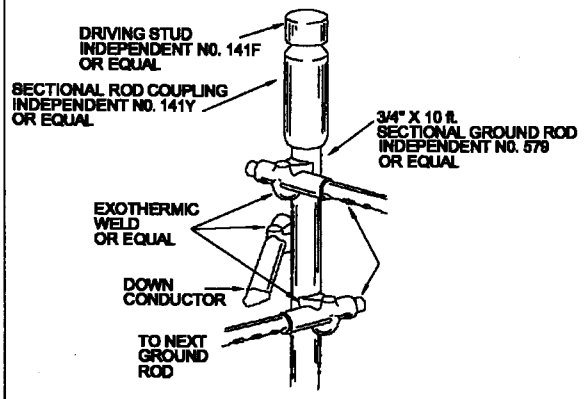

DETAIL "B"

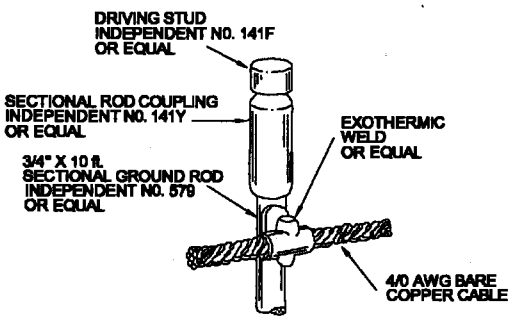

SHEET-2

DETAIL "C"

FIGURE 4-5. EXOTHERMIC WELDING PROCESS

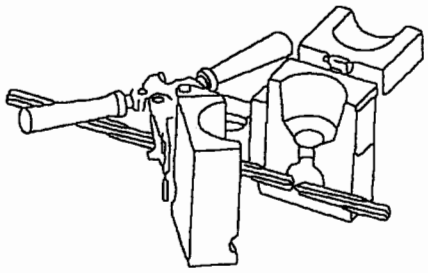

1. PRE-HEAT AND CLEAN THE MOLD; CLEAN THE CONDUCTORS; PLACE CABLE ENDS IN MOLD

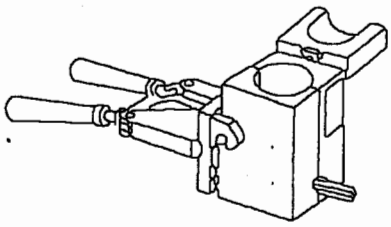

2. CLOSE HANDLES TO LOCK MOLD; DROP METAL DISK INTO MOLD

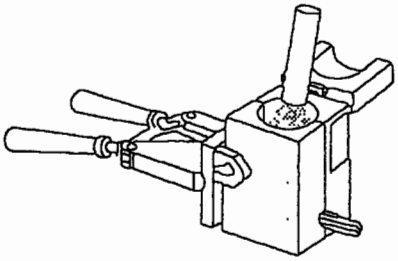

3. DUMP WELD METAL INTO MOLD; SPRINKLE STARTING MAT'L OVER WELD METAL AND ON LIP OF MOLD

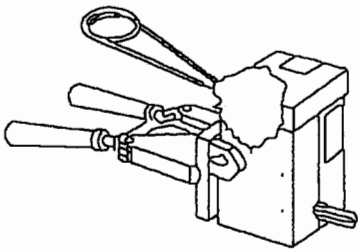

4. CLOSE COVER AND IGNITE; OPEN MOLD AFTER METAL SOLIDIFIES; REMOVE SLAG FROM MOLD BEFORE MAKING NEXT CONNECTION

FIGURE 4-6. GROUND ROD WELDS

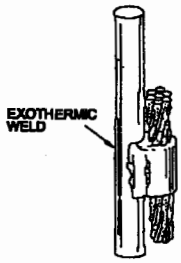

TYPE GP

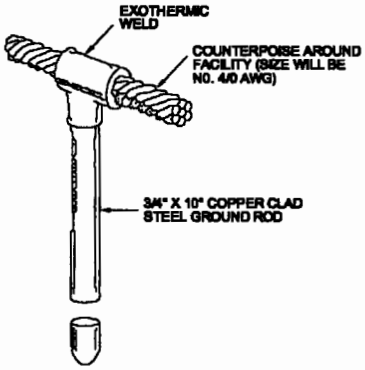

TYPE GT

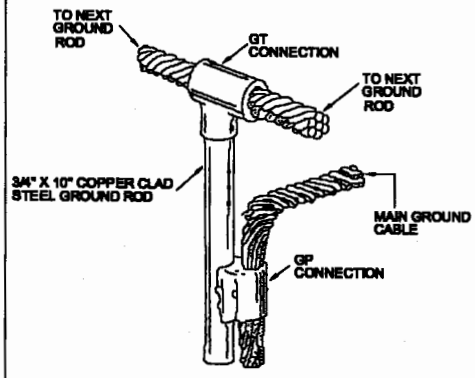

EXOTHERMIC WELD NOTES

1. DUXSEAL, MADE BY JOHNS-MANVILLE OR EQUAL, SHALL BE USED TO SEAL AROUND EACH CABLE ON OUTSIDE OF THE MOLD FOR ALL CABLE CONNECTIONS
2. THE CABLES SHALL BE CLEANED WITH A WIRE BRUSH & CLAMPED TO PREVENT THEIR MOVEMENT FROM MOLD PRIOR TO SHOOTING WELD
3. MOLDS ARE TO BE OF TYPE APPROVED FOR PROPER CONNECTION AND CLEANED PRIOR TO SHOT
4. MOLDS SHALL NOT BE MODIFIED
5. AT CONTRACTORS OPTION, GROUNDING CONNECTIONS MAY BE COMPLETED BY DOUBLE CLAMP & BRAZE PER DRAWING SW-D-9148-2 OR EXOTHERMIC WELD PROCESS PER DRAWING SW-D-9148-3

EXOTHERMIC WELD CONNECTIONS

FIGURE 4-7. DETAILS OF GROUND ROD/INTERCONNECTING CABLE INSTALLATION

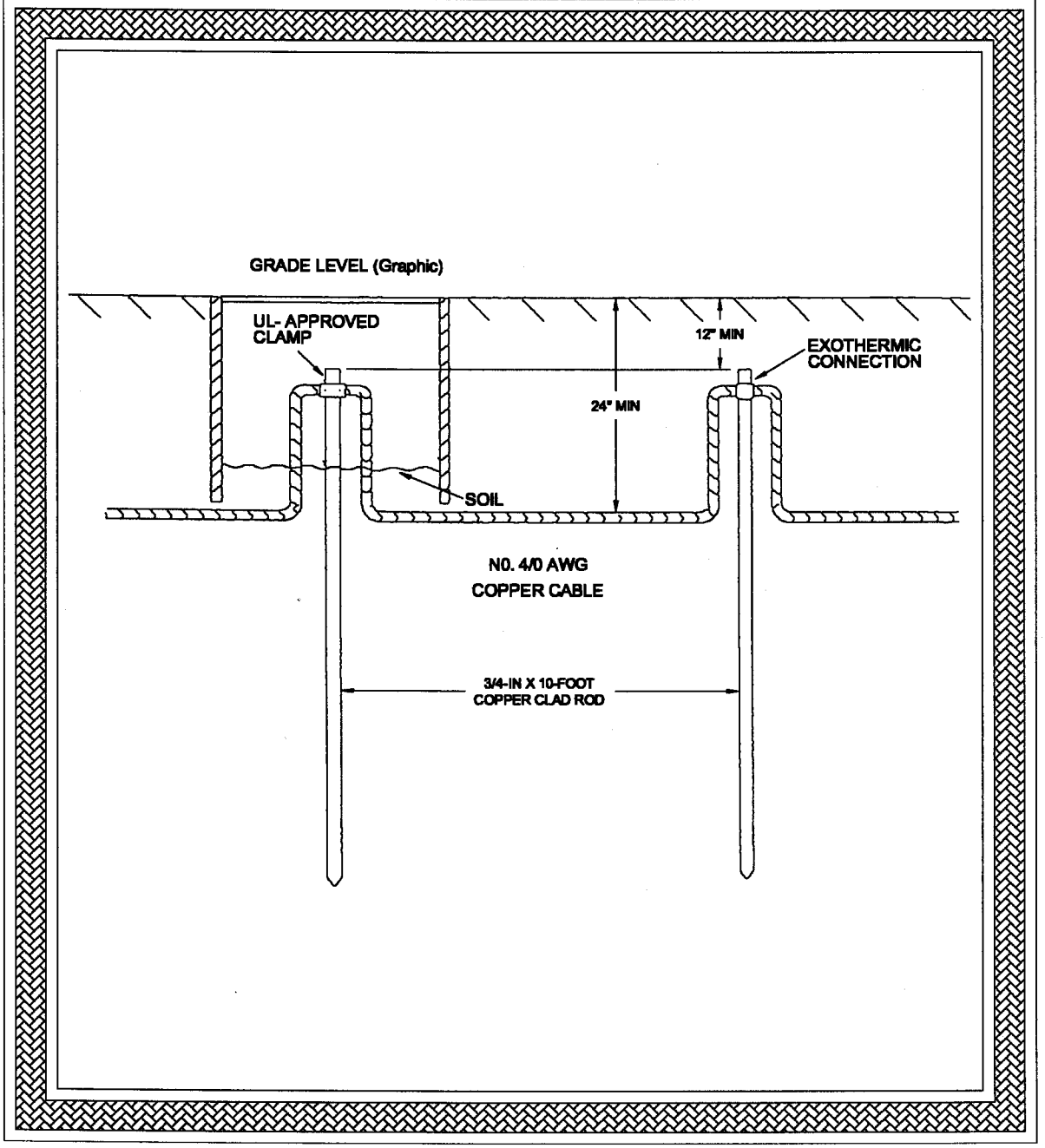

FIGURE 4-8. GROUNDING ACCESS WELL CONSTRUCTION

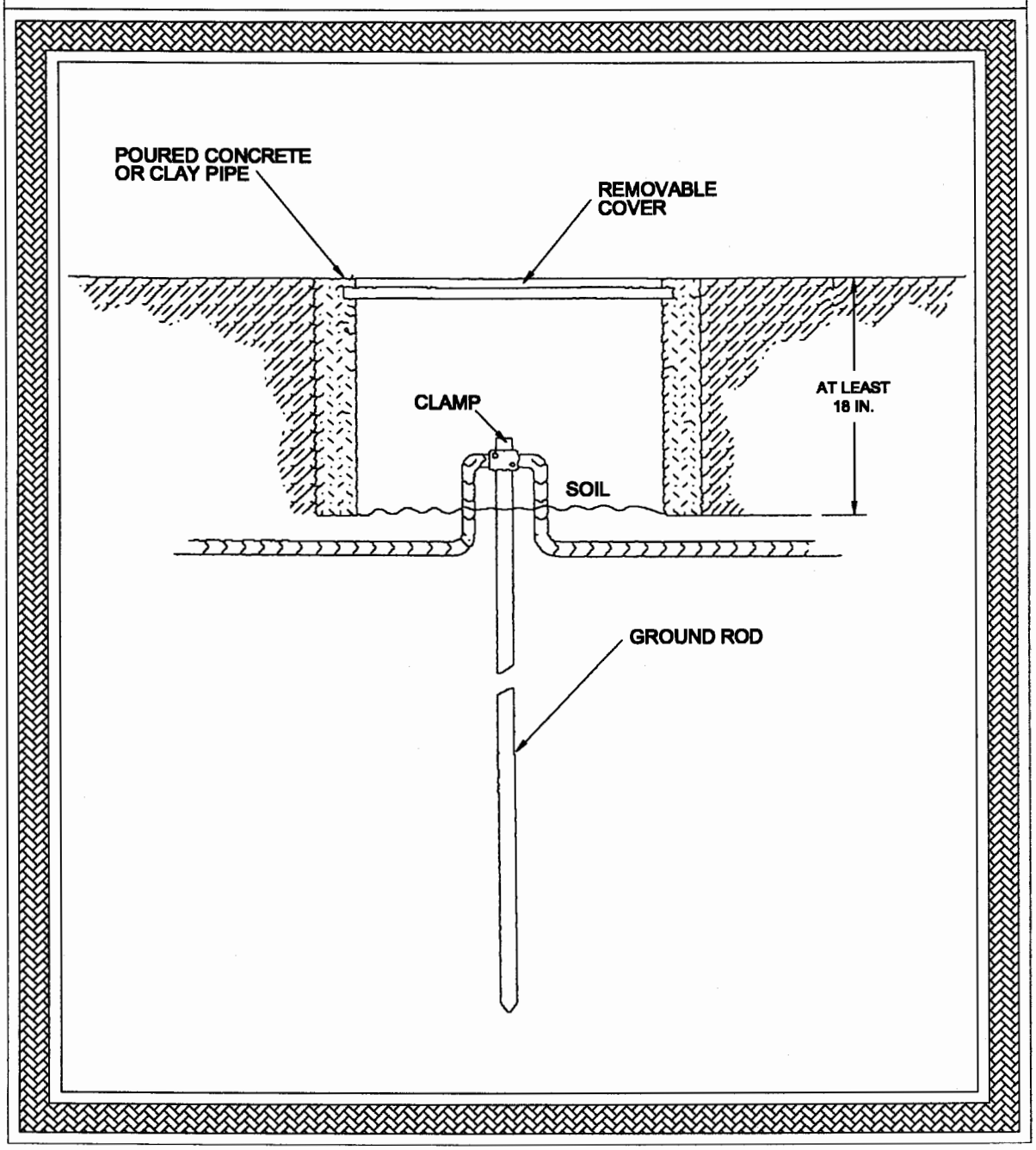

d. Repairing Existing Earth Electrode System. If the average earth ground resistance of the existing earth electrode system exceeds a nominal value of 10.0 ohms, make a trench with hand tools to uncover the copper interconnecting conductor and ground rod joints for complete inspection. A general picture indicating parts of the earth electrode system to be examined is shown in Figure 4-9, Connection to Earth Electrode System.

(1) Interconnecting Conductor. An inspection is to be made of the existing interconnecting conductor to ensure it meets FAA-STD-019. Examine the conductor throughout its length for breaks. Ensure good electrical and physical conductor bonds are present at the existing ground rods. Faulty welds shall be repaired using an exothermic No. 4/0 size cable splicer mold and the weld metal compound. Retest the earth electrode system after the interconnecting cable has been inspected and properly repaired.

(2) Earth Electrode System Cables. The existing earth electrode system cables may be retained if it is found to meet specifications. If the existing earth electrode system cable is smaller than NO.4/0 AWG, bare copper conductor, but meets the test requirements of this directive, the existing interconnecting cable conductor should be replaced with the proper size components if within the scope of the project.

e. Upgrading Existing Earth Electrode System. If the average earth resistance reading still exceeds the 10.0 ohms requirement attempt the following steps within the scope of the project.

(1) Existing Interconnecting Conductor. Any existing bare conductor which does not conform to specifications should be connected to the new earth electrode system to ensure only one grounding system. The existing AC power transformer ground connection may be left intact. Lay a new No. 4/0 AWG bare stranded copper conductor in the trench. Ensure the conductor has no kinks or sharp bends. Attach the new conductor to each ground rod with an exothermic weld using a cross-cable mold and weld material. Cut the No. 4/0 AWG conductor and weld ends together using a No. 4 splicer mold and cartridge.

(2) Ground Rod Performance. Two alternatives are available to increase the performance of the ground rod system. At each ground rod, install an additional ground rod on either side and at distances twice the length of the rod. Another approach is to drive the rods deeper into the earth. Sections are added to increase the length as necessary. The method used is determined by soil conditions, site layout, and the results of earth-to-electrode measurements. If the addition of ground rods is not practical, driving them deeper into the earth may reduce the earth-to-electrode resistance to an acceptable level.

FIGURE 4-9. CONNECTION TO EARTH ELECTRODE SYSTEM

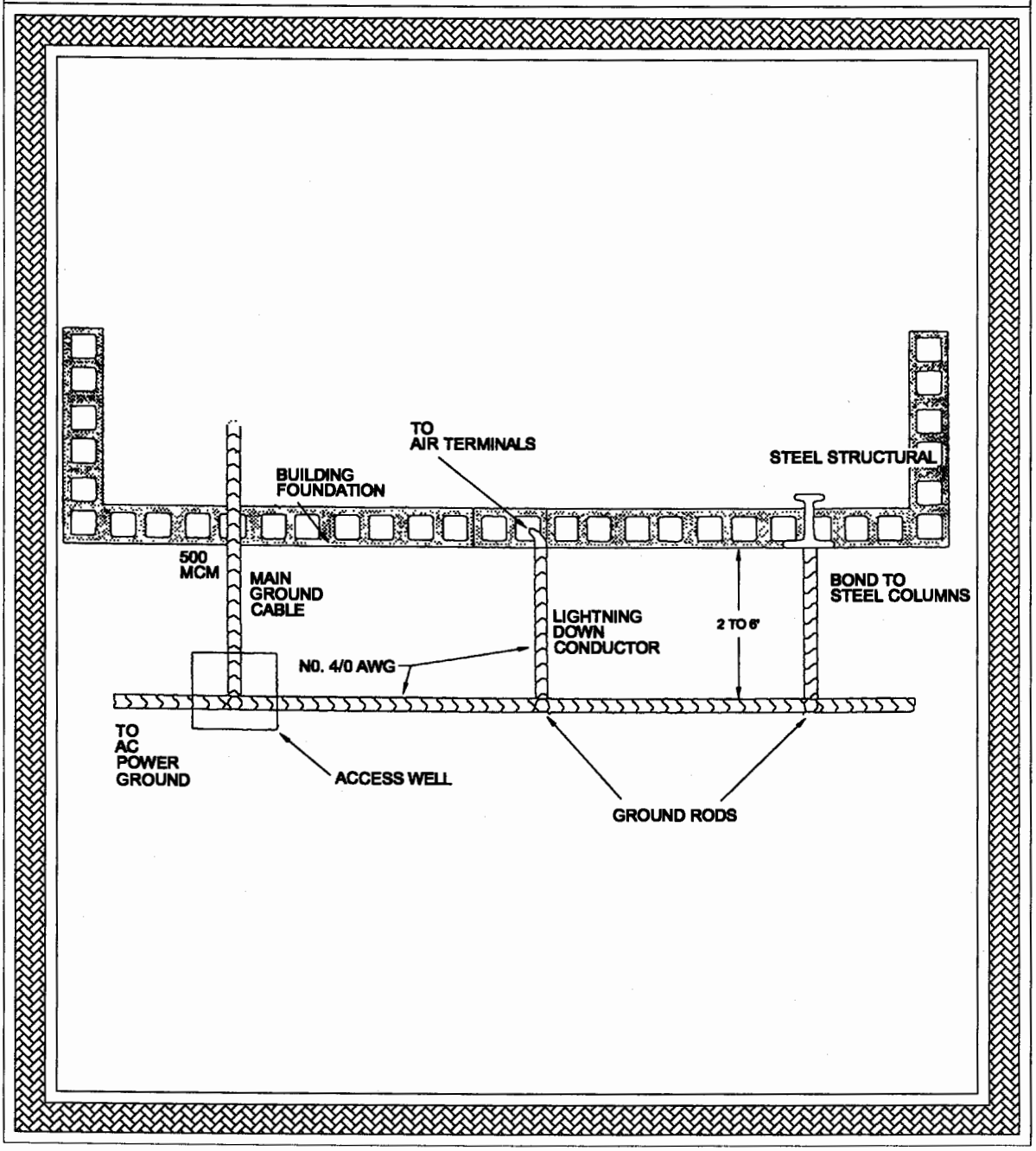

(3) Overall Grounding system. Examine all elements of the facility exterior grounding system from the main ground plate outward. Upgrade the grounding conductors if the conductors are not the proper size. Repair or replace, using exothermic welds, any ground conductor bonds in poor condition. Each air terminal down conductor must be connected directly to a ground rod in the earth electrode grounding system. Install new ground rods as needed for this requirement, and bond each down conductor to its rod with an exothermic weld. Attach each rod to its facility earth electrode grounding system perimeter cable with an exothermic weld or, only in an access well, a clamp.

(4) Earth Resistance Measurements. Retest upgraded earth electrode/interconnecting cable system using the procedure described in this chapter, Section 7, Testing.

f. Alternate Ground Plane System. Ground plane copper conductor wire size requirements vary with the type and condition of soil encountered or the rock surface they are to cover. In non-corrosive soil the conductors shall be no smaller than No. 4/0 AWG bare copper wire. A rock surface will require No. 1/0 AWG or larger wire for the conductors. Copper straps three to six inches in width and one-eight inch thick may be used instead of round wire to cover rock surfaces; however, straps shall not be used in high wind areas.

(1) Soil Installation. A minimum of three conductors made of copper wires or straps shall be buried at least 24 inches below the surface and extend 20 feet from center. A one piece, copper wire, ground loop surrounds the equipment building and connects the earth electrode ground rods that are driven into the soil around the building. Figure 4-10, Tower and Structure Surface Ground Plane System, shows the position of the earth electrode ground system in a typical poor conducting soil installation.

(a) Conductor Burial. Trenches for the conductors are dug either by hand or with a trench digger. Use of ground rods is desirable if soil conditions permit. When ground rods are used they shall always be driven in place. Placement of the individual ground rods is determined by the type of soil and its resistivity.

(b) Conductor Connection. Underground connections are made using exothermic welds or cable clamps for above grade. A ground access well is necessary whenever clamps are used to join the individual conductors together.

(c) Structure Ground Connection. A structure ground connection is made using two 500 Thousand Circular Mil (MCM) AWG cable attached to an earth electrode system ground rod by an exothermic weld or, within a ground access well, by a cable clamp. The other end of the cables are attached with bolt lugs or exothermic welds to the structure ground at the main ground plate. See Paragraph 94, Main Ground Plate Installation.

FIGURE 4-10. TOWER AND STRUCTURE SURFACE GROUND PLANE SYSTEM IN POOR CONDUCTING SOIL

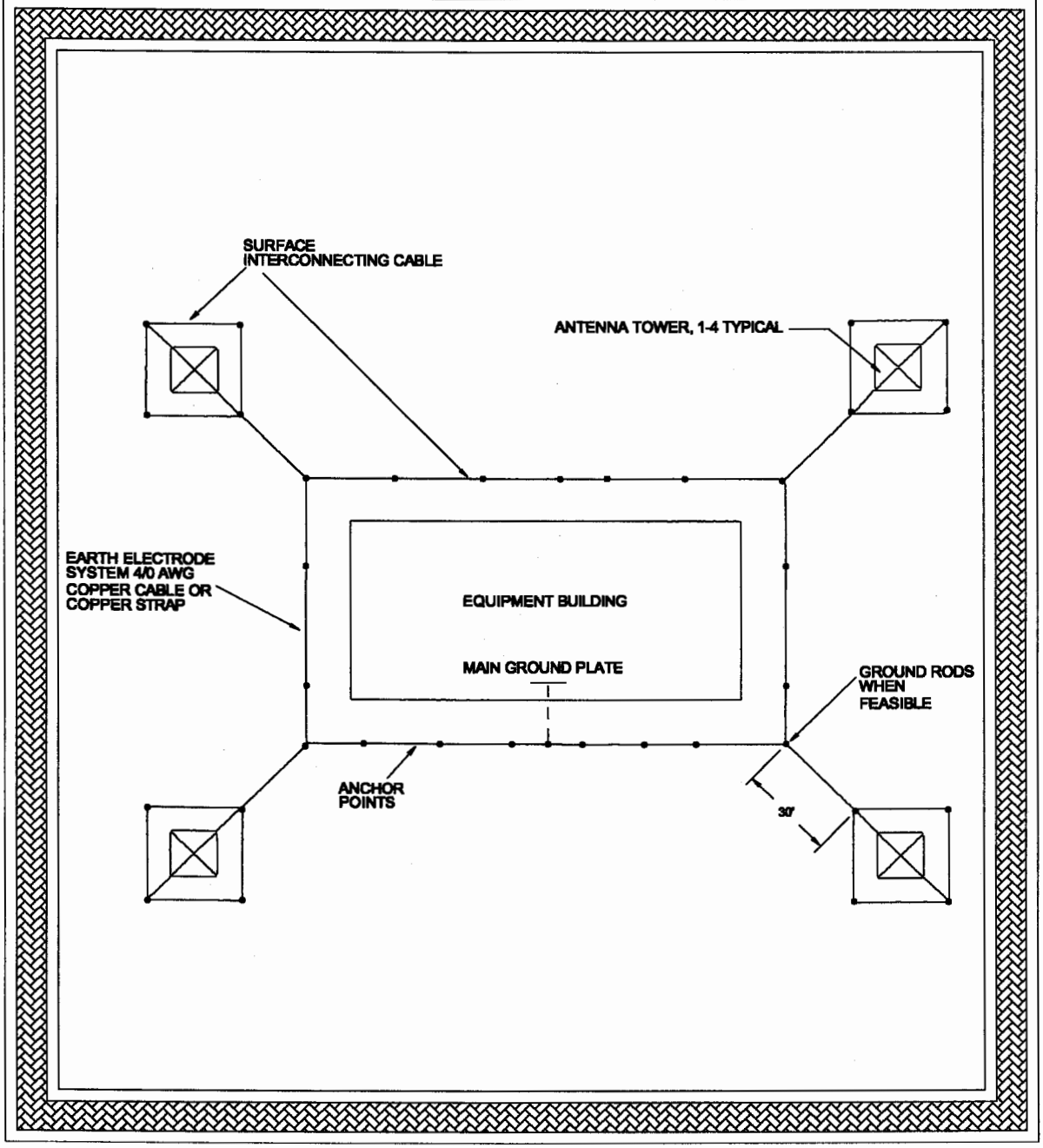

(2) Rock Surface Installation. Surface mounted grounds shall slope down and away from the structure being protected. Rock surface installation requires the use of anchor bolts to secure all ground wire or strap to the rock. An anchor bolt shall be used for every 10 feet of ground conductor length. No electrical connection is needed from the ground conductor to bolts secured in rock since rock is not a good conductor. Where an area of soil will permit installation of a ground rod, a rod shall be driven into the soil to enhance the ground system. Rod connection to the ground conductor is made with an exothermic weld. Ground rods shall be separated by at least one rod length, but a two rod length minimum separation is preferred. Ground rods are not bunched because mutual inductive coupling reduces their effectiveness as low impedance paths to ground.

(a) Conductor Placement. The grounding system elements are placed so that the conductors lie in straight paths, which begin at the perimeter of the structure and proceed away from the structure. A ground loop made of No. 4/0 AWG copper is used to connect the individual conductor ends together using exothermic welds at each joint. A typical tower and structure combination using this technique is shown in figure 4-10. When rolling topography, earth berm, or obstacles such as rocks are encountered, the conductor is routed over the obstacle and not around it. The conductors shall not be placed where their paths would encounter large structures or objects, which would require them to go around the object. Careful site planning is required when installing an above ground earth electrode system so that enough conductors of the proper length can be used.

(b) Structure Ground Connection. The other end of the ground connection cable is connected to the main ground plate inside the structure as in a normal earth electrode counterpoise system installation. A bolt-on lug is used to join the cable to the main ground plate.

g. Chemical Enhancement. Ion-producing chemicals are added to the soil surrounding the ground rods. The following chemicals are commonly used for this purpose:

NAME	SYMBOL	COMMON NAME
Magnesium Sulfate	$MgSO4$	Epsom Salt
Copper Sulfate	$CuSO4$	Blue Vitriol
Calcium Chloride	$CaCl2$	Ice bite
Sodium Chloride	$NaCl$	Common Salt
Potassium Nitrate	$KNO3$	Saltpeter

Magnesium sulfate is the most commonly used chemical due to its low cost and high electrical conductivity. It is also the least corrosive of the chemicals listed. The chemical can be applied in a trench around the ground rod as shown in Figure 4-11, Trench Method of Soil Treatment, or in an access well like the one shown in Figure 4-12, Alternate Method Of Soil Treatment. Coke Breeze should also be considered in accordance with FAA-STD-019.

h. Documentation of Earth Electrode Tested Installation. Redline all applicable facility drawings to indicate changes to the existing earth electrode system. Changes to the new drawings for a new earth electrode system shall also be made. Photographs of below ground exothermic welds should be taken. All applicable documentation is to be conveyed to facility management.

i. Materials required. Installing, repairing, or upgrading the earth electrode system may require any or all of the materials listed in Table 4-1, RCF Earth Electrode System Installation Materials.

93. MAIN GROUND PLATE.

The main ground plate provides a central connection point from the internal grounding system to external earth electrode system components.

94. MAIN GROUND PLATE INSTALLATION.

a. Main Ground Plate. The main ground plate shall be installed on an interior wall or floor of the facility equipment shelter. The main ground plate is a 6 inch by 12 inch by 1/4 inch copper plate mounted on nonconductive material and secured with insulated hardware. The plate shall be mounted as close as possible to where the connection is made to the earth electrode system.

b. Exterior PVC conduit. Install a section of Polyvinyl chloride (PVC) conduit through the facility exterior wall between the main ground plate junction box and the PVC junction (LB fitting) outside of the facility wall as illustrated in Figure 4-13, Main Ground Plate Installation. Schedule 40/80 PVC is recommended per UL-651. Schedule 40 and 80 both may be used in above ground, direct burial and concrete encasement applications. Schedule 80 is thicker walled and is used where physical conditions exist and where applications are in industrial and pole installations are demanded. Install PVC conduit and a PVC sweep elbow between the PVC junction and the ground access well. Attach the PVC conduit to the facility wall with straps. An earth electrode system ground rod at the access well shall be dedicated to the main ground plate and be in the vicinity of the PVC sweep elbow.

c. Main Ground conductor. Install two No. 500 MCM size insulated copper conductors between the main ground plate and the earth electrode system ground rod located at the ground access well. If a ground rod does not exist in the earth electrode system near the PVC sweep elbow, install a ground rod and access well dedicated to the main ground plate. Then attach it to the earth electrode ground system. Refer to Table 4-2, New Installation Junction Box, Main Ground Plate. In new installations, the ground conductor should come up from a conduit provided in the building foundation since the main ground conductor can be difficult to bend in some cases.

FIGURE 4-11. TRENCH METHOD OF SOIL TREATMENT

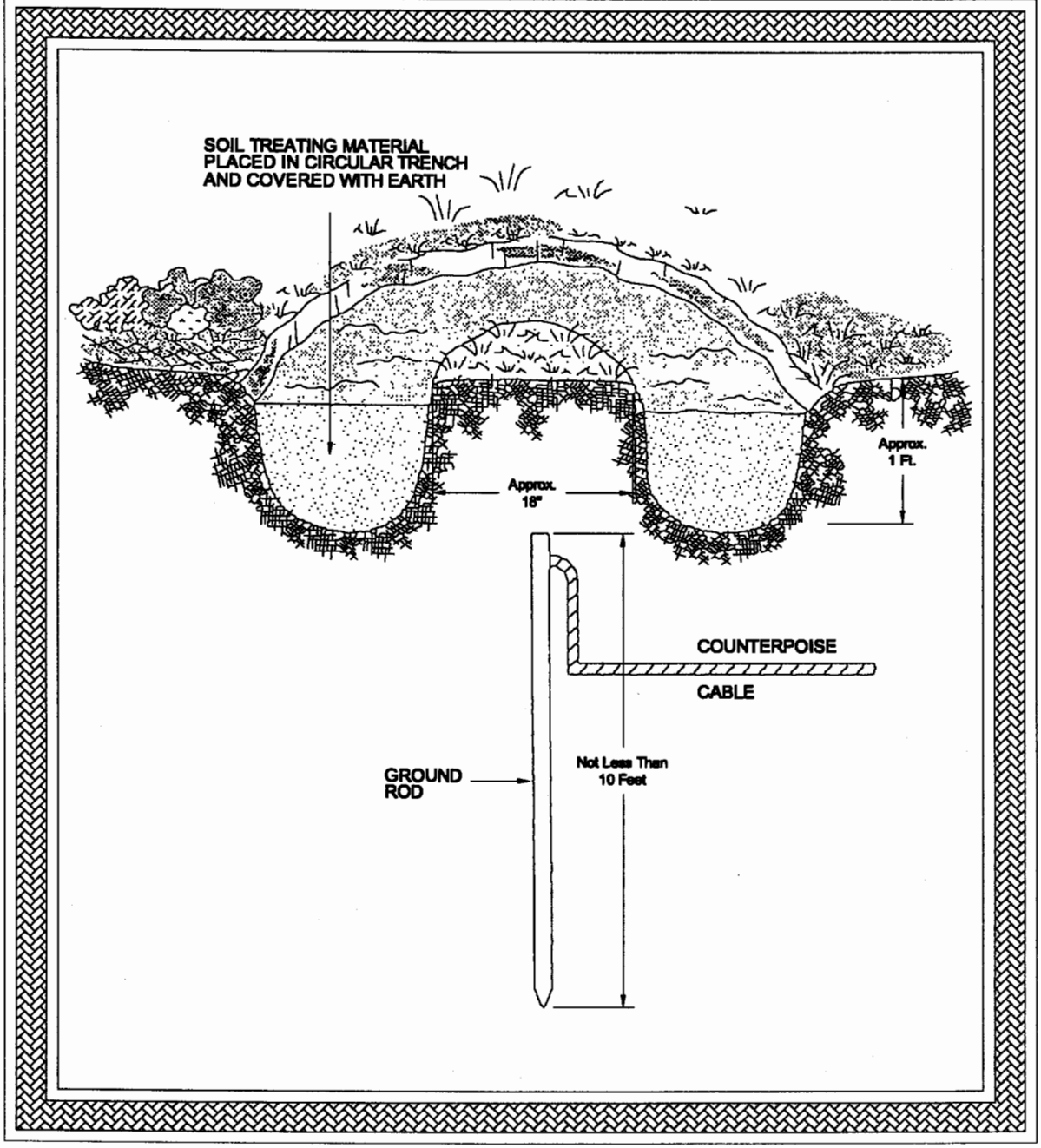

FIGURE 4-12. ALTERNATE METHOD OF SOIL TREATMENT

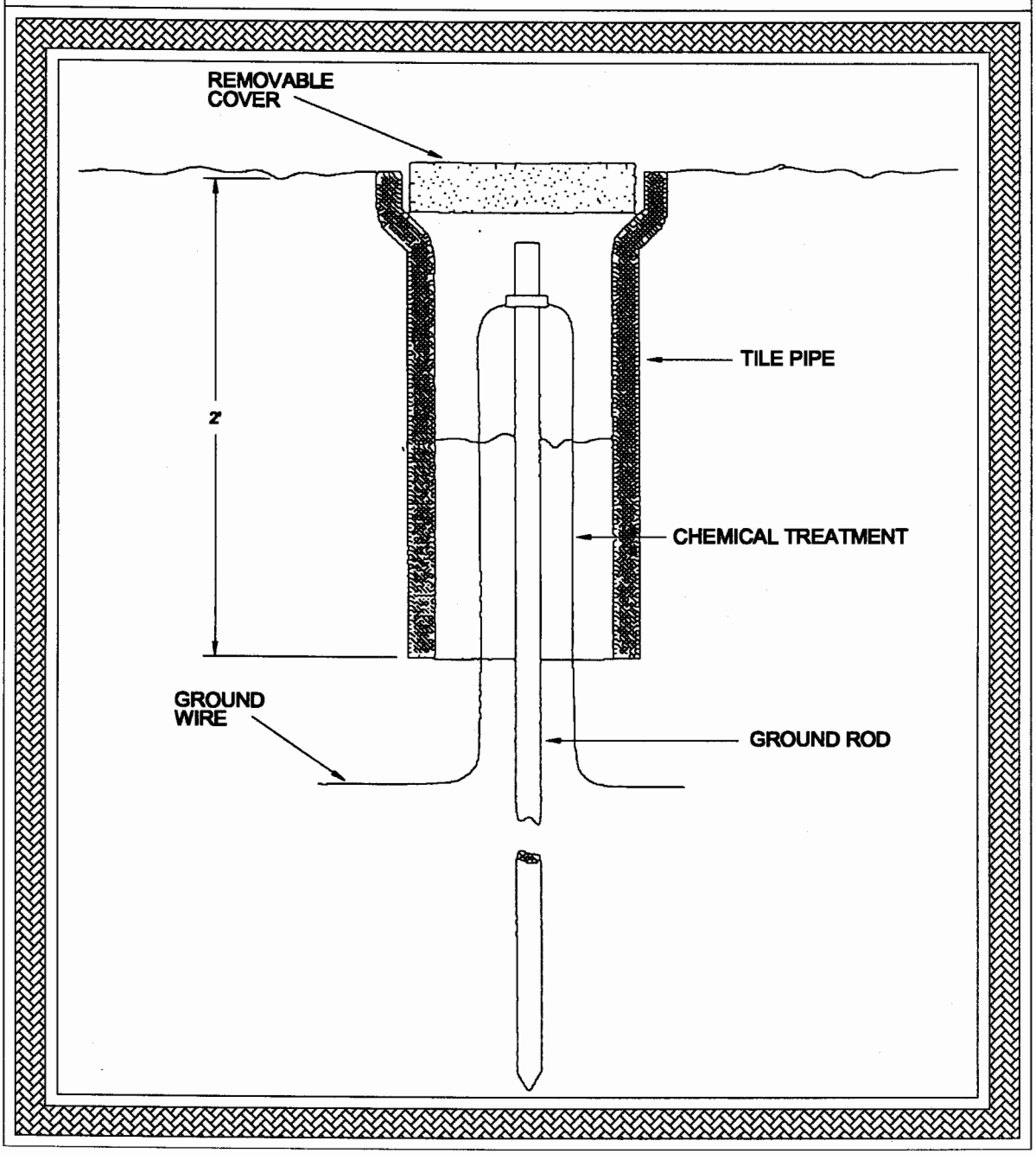

TABLE 4-1. RCF EARTH ELECTRODE SYSTEM INSTALLATION MATERIALS

ITEM	ITEM DESCRIPTION	QUANTITY
1.	Ground rod, sectional, copper clad steel, 3/4 inch x 10-feet, IPC No. 579T, or equal	As Required
2.	Ground rod, sectional, copper clad steel, threaded coupler, IPC No. 141Y, or equal	As Required
3.	Driving stud, IPC No. 141F, or equal	As Required
4.	4/0 AWG stranded bare copper conductor, 19 strand, Alpha No. 7388, or equal	As Required
5.	Welding mold, 3/4 inch ground rod to 4/0 AWG cross-cable, Cadweld GYE-182Q, or equal	As Required
6.	Weld metal, Cadwel #150, or equal	As Required
7.	Weld metal, Cadwel #2-200, or equal	As Required
8.	Splicer mold, 4/0 AWG size cable splicer, Cadweld HDSSC-2Q, or equal	As Required
9.	Ground rod, splice mold, 3/4" copper rod Cadwel HDGBD-18, or equal	As Required
10.	Handle clamps, Cadwel L-160, or equal	As Required

FIGURE 4-13. MAIN GROUND PLATE INSTALLATION

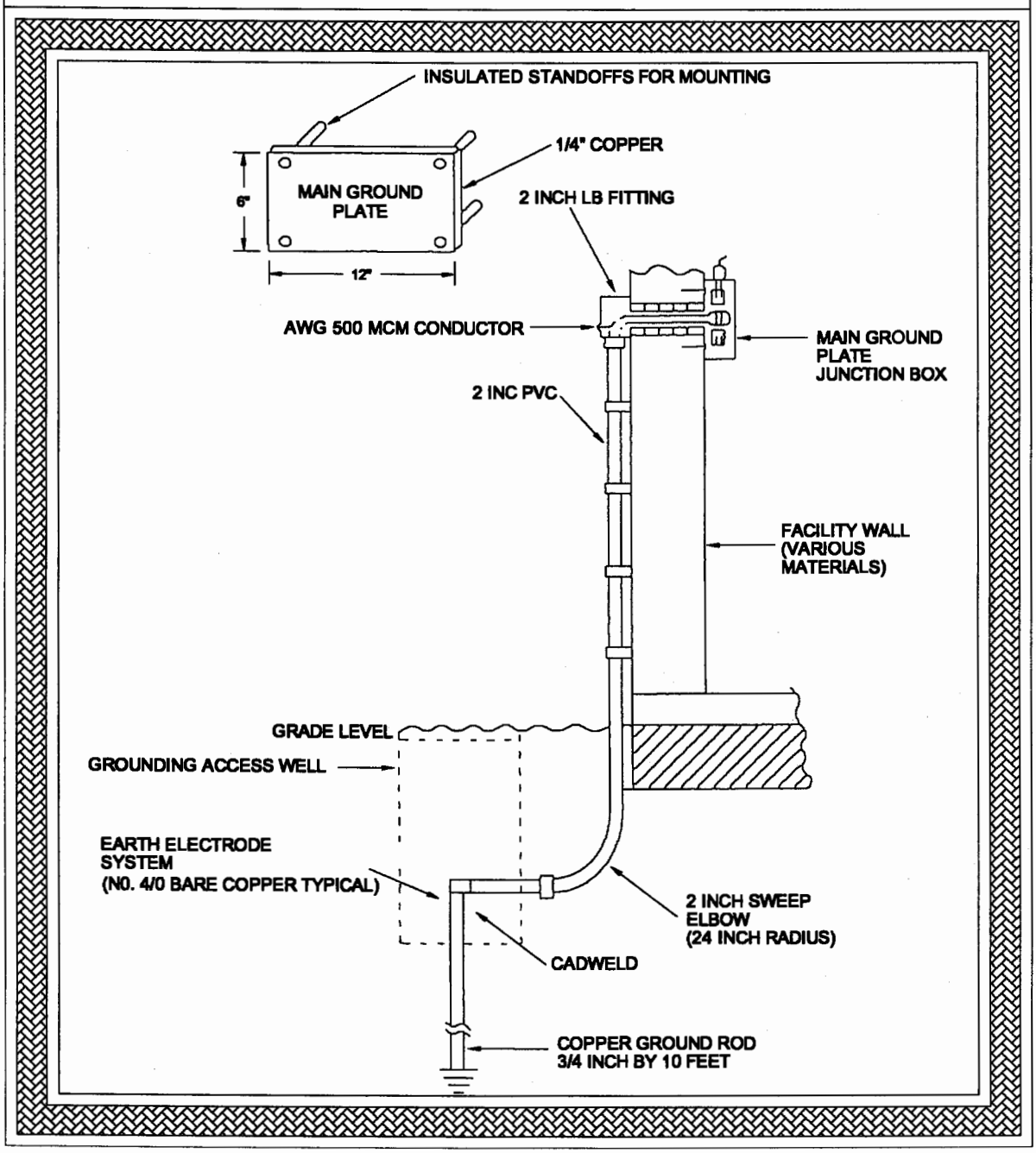

TABLE 4-2. NEW INSTALLATION JUNCTION BOX, MAIN GROUND PLATE

ITEM	ITEM DESCRIPTION	QUANTITY
1.	Junction Box, PA-16, per FAA Drawing DK-6075-19	1 each
2.	Connector, compression type, 1-1/2 inch steel, Thomas & Betts 5523 or equal	2 each
3.	Conduit, thin-wall, 1-1/2 inch galvanized steel	As Required
4.	Wall Anchors with screws (depends on wall construction material)	4 each
5.	No. 4/0 AWG stranded insulated copper wire Multi-Point: Green/ORG Tracer Single-Point: Green/YEL Tracer Lightning: Green/RED Tracer	As Required
6.	Lug, screw, Thomas & Betts 35301 or equal	1 each
7.	Connector, split-bolt, Burndy Type KS17, or equal	1 each
8.	Connector, split-bolt, Burndy Type KS22, or equal	1 each
9.	Connector, split-bolt, Burndy SERVIT Post Type K2C22, or equal	As Required
10.	Compound, sealing, Chico A3, or equal	1 lb.
11.	Tie wrap, nylon,	As Required

95. RESERVED.

96. RESERVED.

97. RESERVED.

98. RESERVED.

SECTION 3. LIGHTNING PROTECTION SYSTEM

99. REQUIREMENTS.

Equipment and structure damage from lightning comes in two forms: a direct lightning discharge to the equipment or structure, and a surge in voltage and current on electrical connections to the equipment. The RCF facility shall be protected from both occurrences. There are three basic elements for a lightning protection system. These elements are an electrically conductive object, an electrically conductive path, and a low- resistance electrical connection with the earth. Protection conditions are satisfied when a lightning discharge is routed to the earth through a conductive path which prevents damage to the facility or equipment it is designed to protect.

a. **Electrically Conductive Object.** The conductive object shall be an air terminal mounted at the highest elevation in relation to the structure, or its equipment, to be protected. Required locations of air terminals are determined by the zone of protection provided by each air terminal, beginning with the highest in elevation. Air terminals shall be solid copper, bronze, or aluminum rods 12 inches long minimum with a rounded point. Copper rods may be nickel plated. Copper or bronze rods shall be 1/2 inch in diameter and aluminum rods 5/8 inch in diameter. Figure 4-14, Lightning Protection for Antenna Platforms, shows a protected antenna and tower. A zone of protection is the concave area between a structure and a ball of lightning, of 150 foot radius, as the ball rolls up to, over, and down mounted air terminals. Zones designed with a 150 foot radius ball would protect against most discharges from common 150 foot stepped lightning leaders. See maximum protection zones using 150 foot radii in Figure 4-15, Determining Air Terminals for Buildings Under 50 Feet Tall; Figure 4-16, Determining Air Terminals for Towers; and Figure 4- 17, Air Terminal Protection of Flat Surfaces. Refer to FAA-STD-019 and National Fire Protection Association Code NFPA-780.

b. **Electrically Conductive Path.** Multiple air terminals on a structure shall be interconnected by a perimeter cable to provide at least two paths to ground from each air terminal. A down conductor connects one or more air terminals to the earth electrode system.

c. **Earth Connection.** An exothermic weld or cable clamp shall connect the earth electrode system to a ground conductor providing the earth connection.

FIGURE 4-14. LIGHTNING PROTECTION FOR ANTENNA PLATFORMS

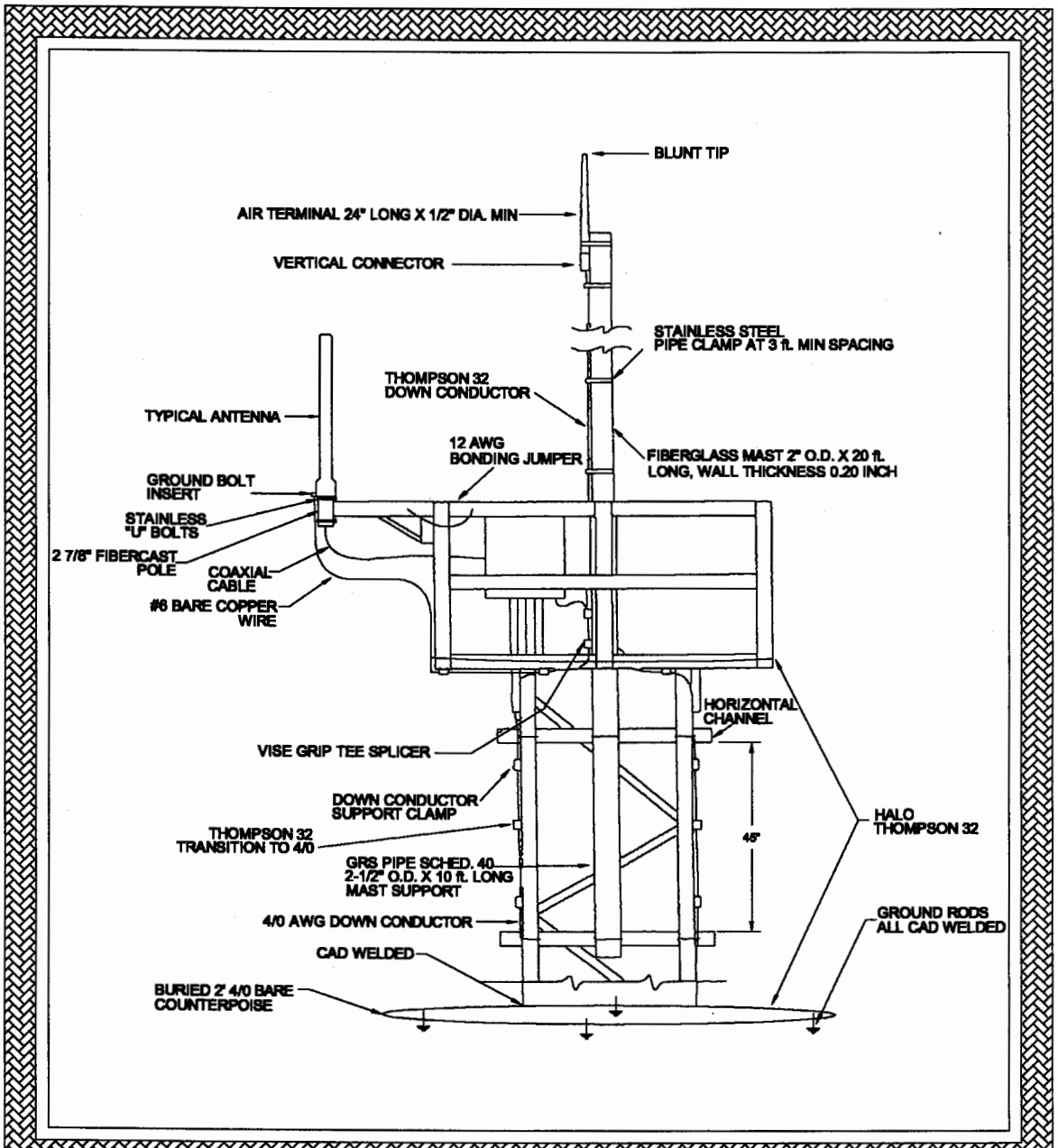

FIGURE 4-15. DETERMINING AIR TERMINALS FOR BUILDINGS UNDER 50 FEET TALL

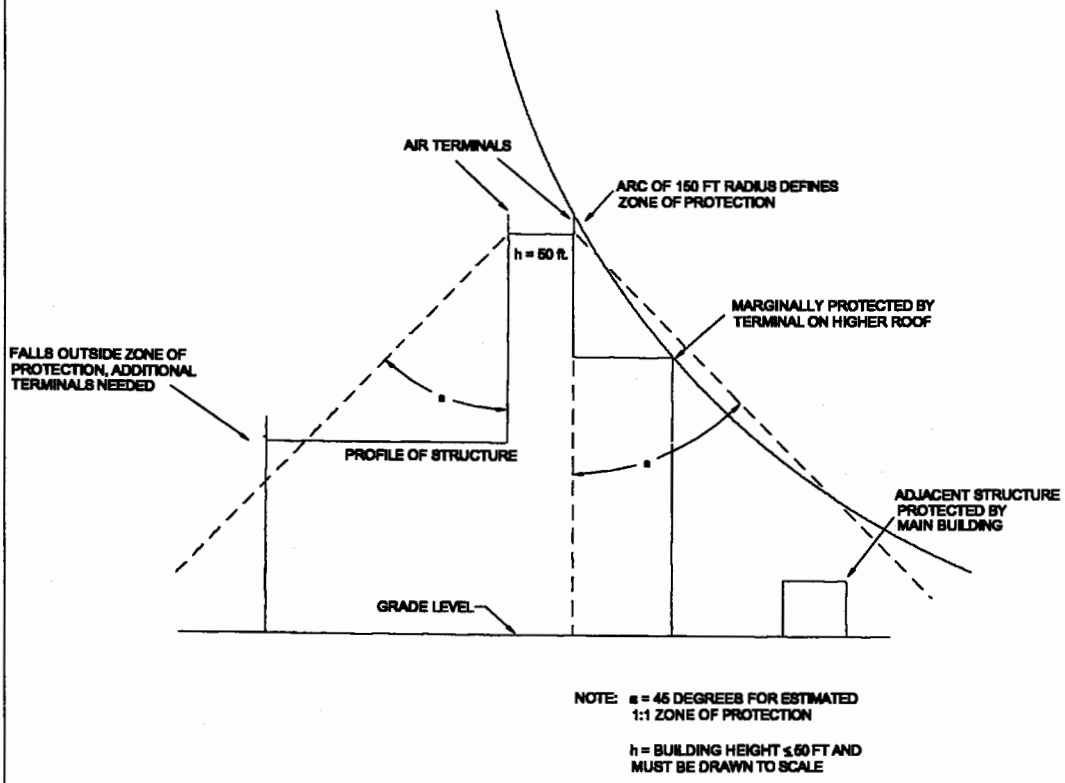

FIGURE 4-16. DETERMINING AIR TERMINALS FOR TOWERS

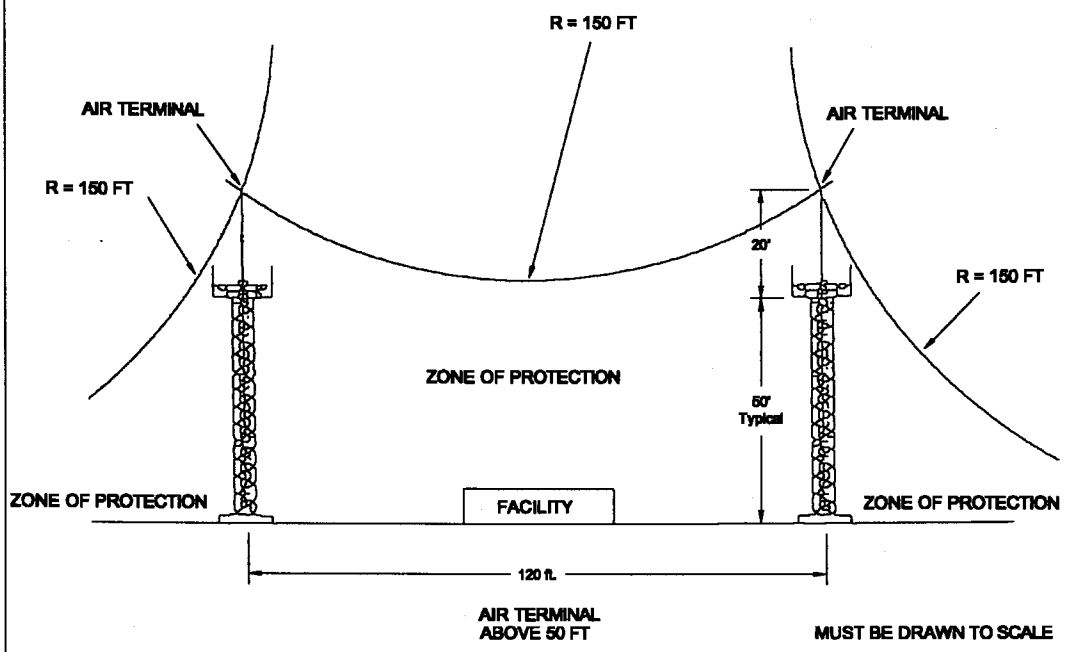

NOTE: P IS THE CENTER, AND R THE RADIUS, OF A CIRCLE TOUCHING THE EARTH AND THE TOP OF AN AIR TERMINAL. EACH ARC DEFINES THE ZONE OF PROTECTION FOR ONE TOWER ANTENNA. THE INTERSECTION OF TWO ARCS AS SHOWN DEFINES THE ZONE OF PROTECTION BETWEEN THE TOWERS.

FIGURE 4-17. AIR TERMINAL PROTECTION ON FLAT SURFACES

NOTE: DRAWING MUST BE TO SCALE

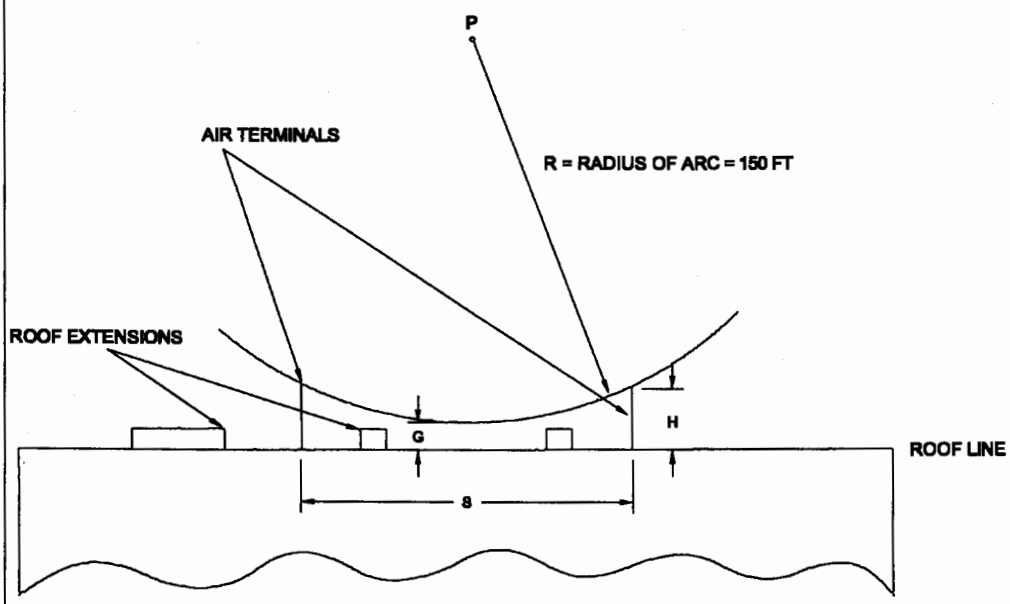

DETERMINATION EQUATION:

$$G = H - R + \sqrt{R^2 - \left(\frac{S}{2}\right)^2}$$

IF G = 0

$$S_{max} = 2\sqrt{H\,(2R - H)}$$

$$H_{min} = R - \sqrt{R^2 - \left(\frac{S}{2}\right)^2}$$

LEGEND

P = POINT OF DISCHARGE FROM FINAL STEPPED LIGHTNING LEADER (CENTER OF ARC)

H = HEIGHT OF TERMINAL

G = MINIMUM ELEVATION COMPLETELY PROTECTED

S = SPACING BETWEEN TERMINALS

100. INSTALLATION.

An air terminal shall extend at least 10 inches above the highest point it is protecting. Air terminals over 24 inches long shall be braced at mid point. Bimetallic connectors shall be used for connecting dissimilar metals such as aluminum and copper or copper and steel. A zone of lightning protection for each structure or group of structures at a site shall conform to FAA-STD-019 and Lightning Protection Code, NFPA-780. Use of 150 foot radius arcs in determining zones of protection provides maximum protection.

a. Tower Protection. An air terminal system shall be used to protect towers from lightning damage. All antennas must be within the tower's zone of protection. The air terminal grounding system and its tower grounding systems shall be installed under the same guidelines and required standards as the earth electrode system. Two down conductors, routed down separate tower legs where possible and away from RF cables, shall connect the tower grounding system to the structure earth electrode system. Utilize reference FAA-STD-019 to identify appropriate antenna tower type.

(1) Self-Support Towers. A self supported tower requires one or more air terminals and two down conductors as part of its lightning protection system. Air terminals shall be interconnected to provide two separate grounding paths from the tower grounding system via down conductors as shown in Figure 4-18a, Antenna Tower Grounding and Lightning Protection. A metal tower whose own structure provides a continuous straight downward electrical path may be considered a part of, but not a replacement for, the down conductor clamped to it. A tower base plate shall be connected to the structure and grounded to its nearest down conductor, keeping the aerial path for the conductor as short as possible. Each down conductor shall take a straight downward path, with no sharp bends, to a bonding plate near the ground before entering PVC to reach a grounding rod. This required PVC should be a minimum of 10 feet. This protects an unknowing individual coming in contact with the down conductor and being exposed to a shock hazard. Each down conductor shall be connected by exothermic weld to a corner ground rod in the structure earth electrode system.

(2) Guyed Towers. Guyed towers have the same grounding and lightning protection requirements as a self supported tower. Guy wires and anchors used in the installation of guyed towers shall be grounded, unless the guy wires are insulated. Guy wires shall be grounded near the turn buckles using wire or strap of the same metal as the guy wires unless bimetallic connectors are used to isolate dissimilar metals. To avoid sharp bends and wire tension, the grounding wire shall follow a downward curving stepped path as shown in Figure 4-19, Guyed Tower Grounding and Lightning Protection.

FIGURE 4-18a. ANTENNA TOWER GROUNDING AND LIGHTNING PROTECTION

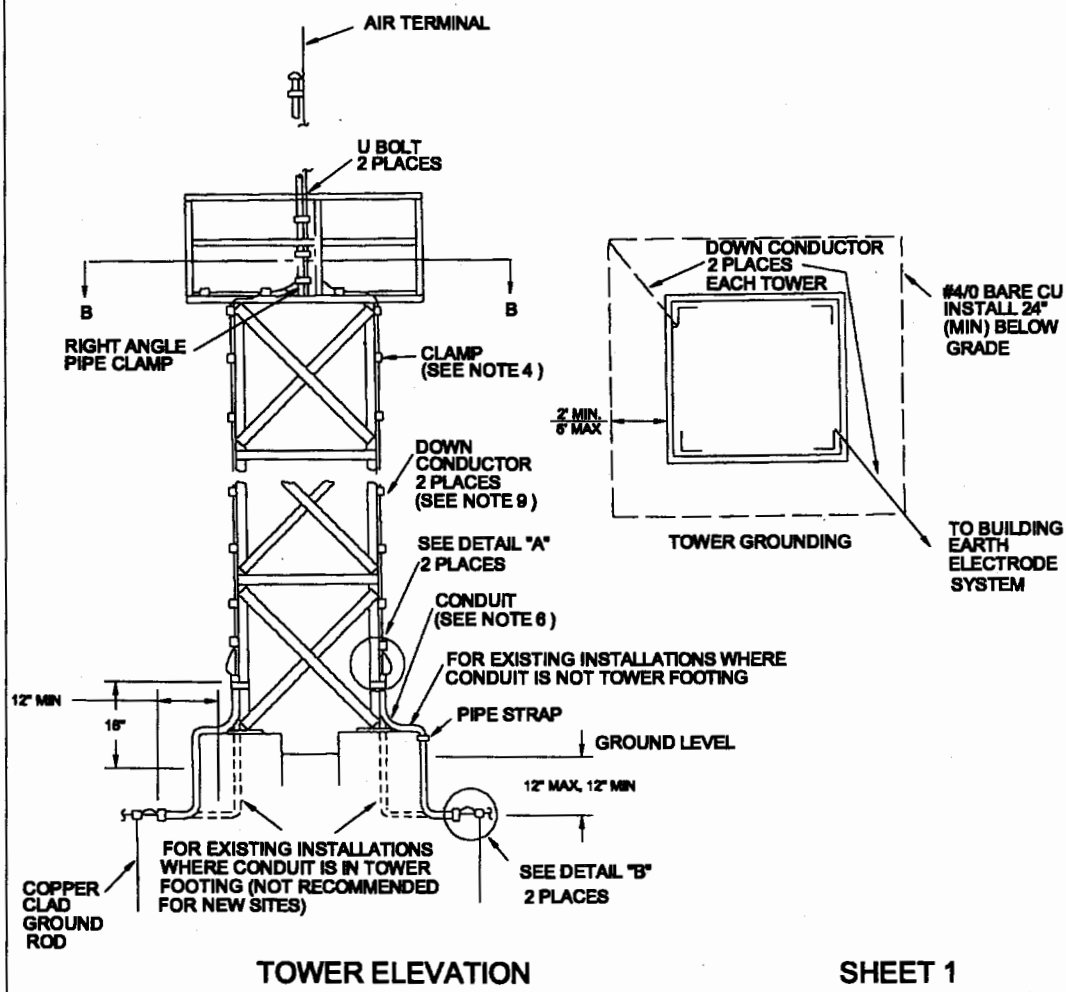

FIGURE 4-18b. ANTENNA TOWER GROUNDING AND LIGHTNING PROTECTION

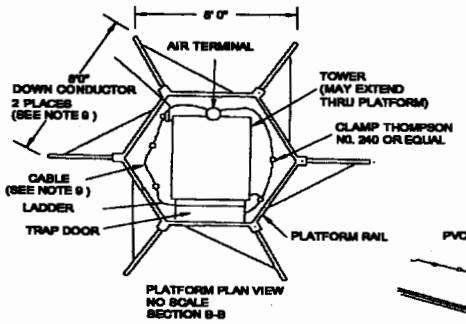

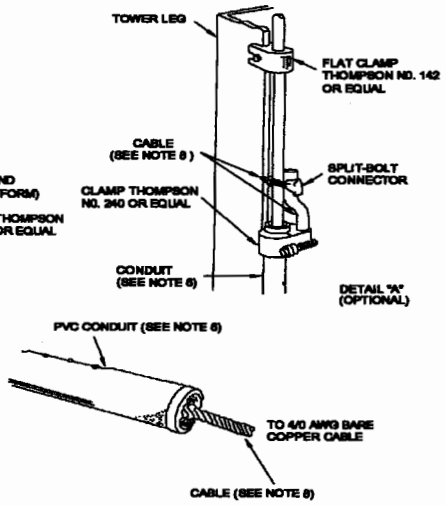

DETAIL "A"

1. CONDUIT AND DOWN CONDUCTOR BEND RADIUS 8" MIN.
2. CONDUIT AND DOWN CONDUCTOR BEND ANGEL 90°
3. EXTEND CABLES 1" BEYOND TERMINATING CONNECTIONS AND FITTINGS.
4. DISTANCE BETWEEN CLAMPS ATTACHING CONDUCTORS TO TOWER SHALL BE 36" MAX.
5. CLEAN BONDING SURFACES UNDER CLAMPS TO BARE METAL, SECURE HARDWARE AND WATERPROOF WITH SILICONE SEALING COMPOUND.
6. FOR CONDUIT REPLACEMENT OR NEW CONSTRUCTION USE SCHEDULE 40 PVC CONDUIT AND OMIT BONDING JUMPER AND FITTINGS. ROUTE CONDUIT THROUGH CONCRETE FOOTING FOR NEW CONSTRUCTION.
7. INSTALL BURIED CABLE 2 FEET BELOW GRADE AND 2 TO 5 FEET FROM TOWER BASE.
8. ALL TOWERS USE THOMPSON NO. 506 CABLE OR EQUAL.
9. INSTALL TWO DOWN CONDUCTORS ON THREE AND FOUR LEG TOWERS. ROUTE CONDUCTORS DOWN OPPOSITE LEGS OF FOUR LEG TOWERS. DO NOT ROUTE DOWN CONDUCTORS WITH ELECTRICAL CABLES.

DETAIL "B"

10. BOND OBSTRUCTION LIGHT CONDUIT AND ANTENNA SUPPORTS TO DOWN CONDUCTORS USING CLAMPS, BONDING JUMPER AND FITTINGS.
11. INSTALL LONGER GROUND RODS OR ADDITIONAL GROUND ROD SECTIONS WHEN NECESSARY TO PRODUCE RESISTANCE OR EXTEND RODS INTO PERMANENT MOISTURE BEARING SOILS.
12. CONNECT THE ELECTRODE GROUNDING SYSTEM SHOWN TO THE EQUIPMENT BUILDING GROUNDING SYSTEM USING BARE NO. 4/0 AWG COPPER CABLE BURIED 2" BELOW GRADE AND EXOTHERMIC WELD OR EQUAL CONNECTORS.
13. WHERE EXISTING TOWERS ARE INDIVIDUALLY GROUNDED AND GROUND RESISTANCE IS SATISFACTORY (APPROX. 10. OHMS) THE BURIED ⅝ AWG COPPER CABLE INTERCONNECTING TOWERS AND THE GROUND RODS BETWEEN TOWERS ARE NOT REQUIRED.
14. MISCELLANEOUS HARDWARE SHALL BE COPPER, BRONZE OR STAINLESS STEEL.

FIGURE 4-19. GUYED TOWER GROUNDING AND LIGHTNING PROTECTION

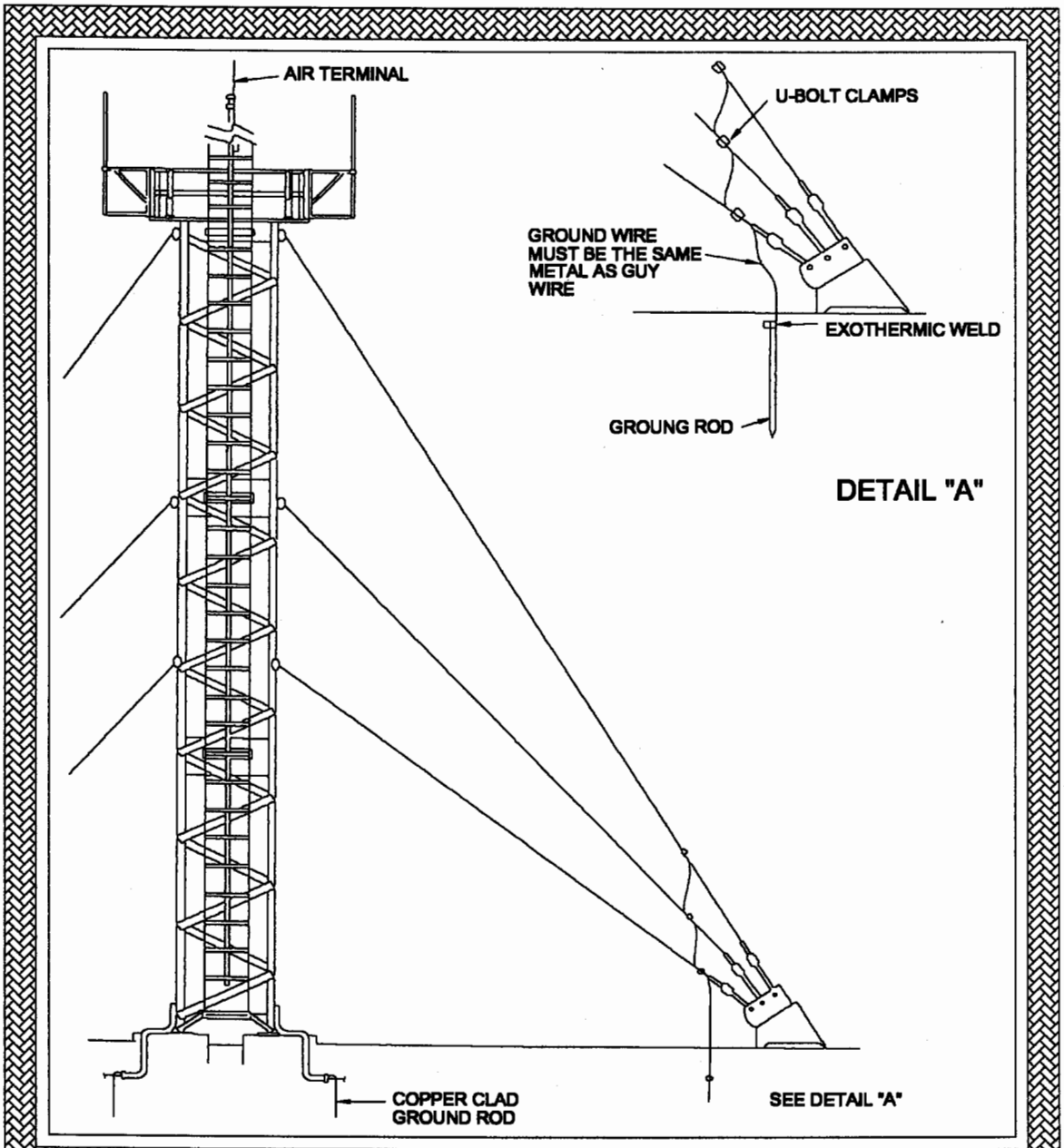

b. Structure Protection. Two or more down conductors shall be provided for building structures with a perimeter of 250 feet or less. The down conductors shall be sized per NFPA 780. Structures whose perimeter exceeds 250 feet shall use an additional down conductor for every 100 feet of perimeter distance.

c. Transmission Line Shield Grounding. Shields on antenna RF coaxial cables shall be grounded to the earth electrode system in the tower junction box and at the entrance to a facility. Transient suppressors are provided at the facility entrance coaxial cable grounding plate at the tower as illustrated in Figure 4-20b, Typical Tower Coaxial Cable and Junction Box Grounding. At some sites an external bulkhead plate may be the facility coaxial cable grounding point. A copper wire shall be attached to this copper plate with a bolt lug and be routed to the facility earth electrode system. Figure 4-21, Typical Coaxial Cable Bulkhead Plate, shows this ground cable. At other facilities conduits may be used to bring the antenna coaxial cables into the building to a cable junction or patch panel box. In either case, the cable outer shield and connectors shall be grounded to the facility earth electrode system. A copper wire routed to the facility earth electrode system shall be attached with a bolt lug to the copper bar or plate which grounds the coaxial cable outer shielding. Figure 4-22, Typical Cable Grounding in Antenna Patch Panel, contains facility entrance feed through transient suppressors and illustrates RF coaxial cable transient protection bus grounding. All wire sizes shall be per FAA-STD-019.

d. Protection of Underground Cables. Buried AC power lines and signal and control landlines, except RF coaxial cables, are best protected in grounded electrically continuous watertight ferrous conduit. Runs more than 300 feet may use armored cable. Protection against direct lightning strikes to buried cables not completely enclosed in ferrous metal conduit shall be provided by installing a guard wire at least 10 inches above and parallel to the buries cables. Bare copper wire is recommended for guard wire as shown in Figure 4-23, Lightning Protection for Underground Cables. For a spread of cables 3 feet wide or less, only one guard wire is necessary. For wider cable spreads, at least two guard wires shall be installed. All guard wires shall be connected to the earth electrode system. Buried cables must enter a facility in ferrous conduit. The conduit must extend a minimum of 5 feet beyond the earth electrode system with the outer end bonded to the earth electrode system with a stranded bare copper conductor. The facility end of conduit shall be bonded to the entrance housing. All wire sizes shall be per FAA-STD-019.

101. RESERVED.

102. RESERVED.

103. RESERVED.

104. RESERVED.

105. **RESERVED.**

FIGURE 4-20a. TYPICAL TOWER COAXIAL CABLE AND JUNCTION BOX GROUNDING

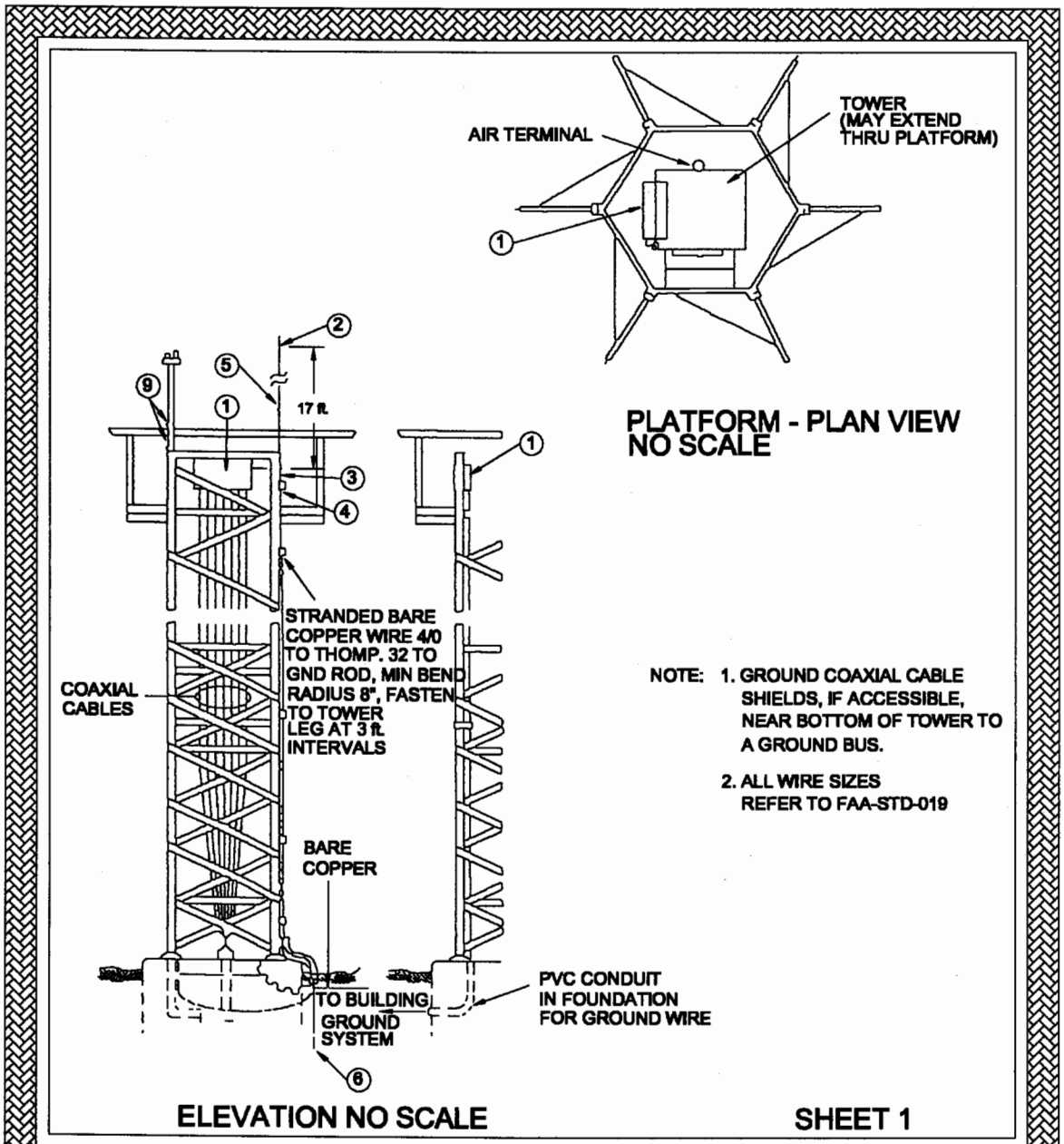

FIGURE 4-20b. TYPICAL TOWER COAXIAL CABLE AND JUNCTION BOX GROUNDING

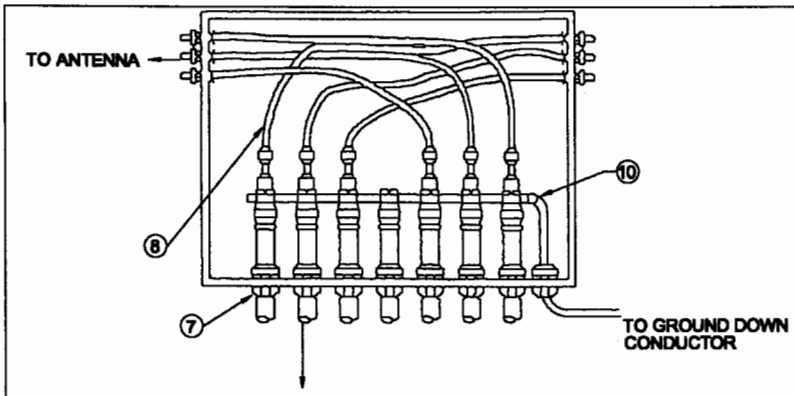

NOTE:

1. 24" X 20" X 8" MIN. DEEP WATERTIGHT JUNCTION BOX NEMA 4 OR 4X (CIRCLE AW OR EQUAL). BOX TO BE SECURELY BOLTED TO TOP RAIL AND TO GALV. ANGLE IRONS.
2. AIR TERMINAL INSTALLATION IN THE CENTER OF THE TOWER. GROUNDING AND INSTALLATION OF THE LIGHTNING ROD SHALL BE IN ACCORDANCE WITH FAA STANDARD DRAWING SERIES FAA-D-6075.
3. COPPER U-BOLT CLAMP (N0. 182, INDEPENDENT PROTECTION CO., OR APPROVED EQUAL).
4. 5/8" BRONZE SUPPORT BRACKET (N0. 67X. INDEPENDENT PROTECTION CO., OR APPROVED EQUAL).
5. 5/8" X 8" COPPERWELD GROUND ROD THREADED TO MATCH LIGHTNING ROD TIP AND BASIC BRACKET.
6. 3/4" X 10" COPPERCLAD GROUND ROD TIES TO ANTENNA GROUND AND BUILDING GROUND WITH A 4/0 BARE COPPER WIRE.
7. CONNECTOR, WATERTIGHT WITH LOCKNUT (TYPE T & B 2558 OR EQUAL).
8. BRING CABLES INTO PATCH BOX. LEAVE 2 FEET OF EXCESS-CABLE AND MAKE ENDS WATERTIGHT WITH TAPE.
9. ANTENNA TOWER, SAFETY RAIL, PLATFORM, AND COAXIAL CABLE ARE GOVERNMENT FURNISHED. ALL OTHER ITEMS SHOWN ARE CONTRACTOR FURNISHED.
10. COPPER GROUNDING BAR WITH LUG (SPECIAL TO SITE).

NOTE: 1. ALL WIRE SIZES REFER TO FAA-STD-019

SHEET 2

FIGURE 4-21. TYPICAL COAXIAL CABLE BULKHEAD PLATE

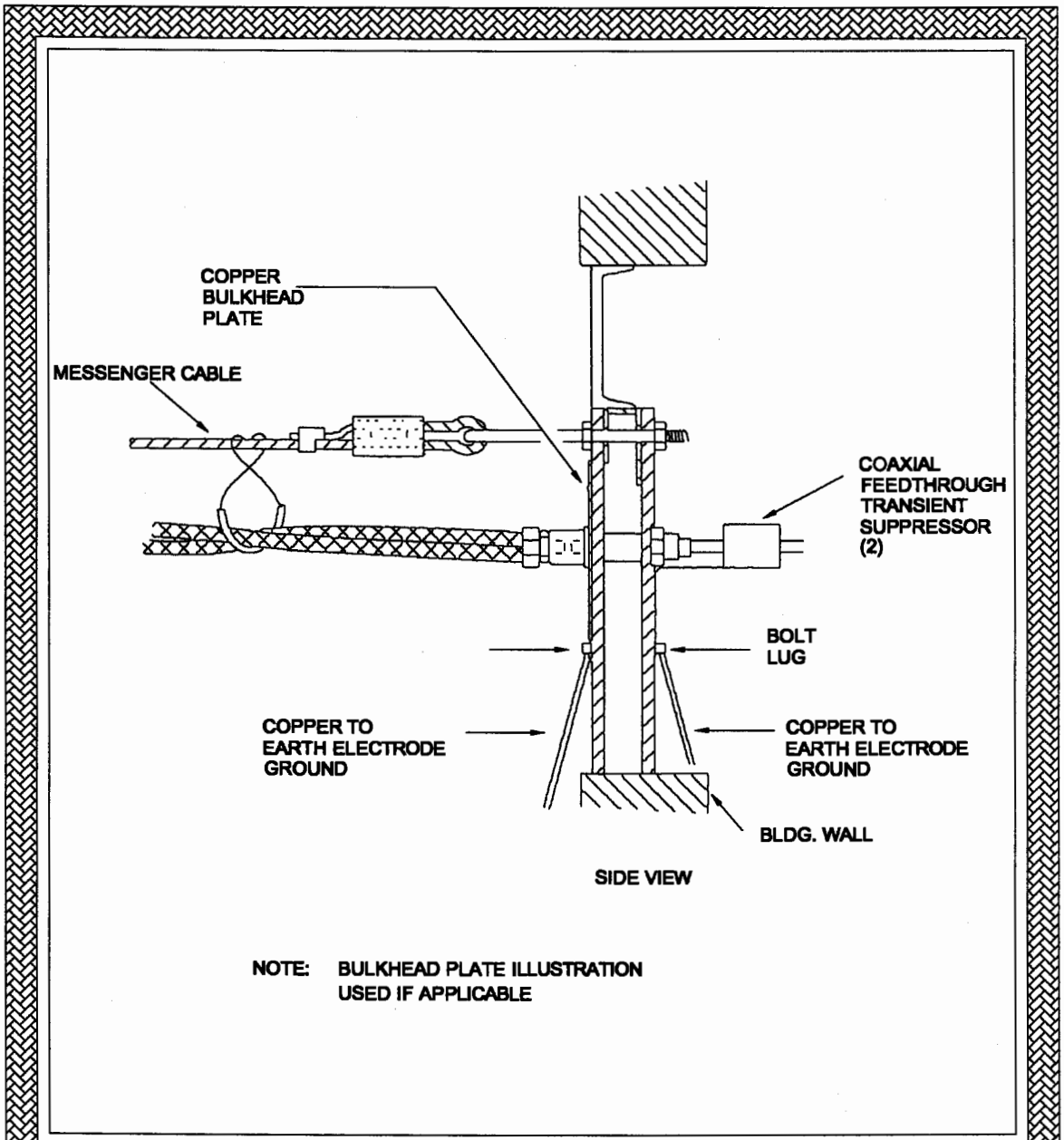

NOTE: BULKHEAD PLATE ILLUSTRATION USED IF APPLICABLE

FIGURE 4-22. TYPICAL CABLE GROUNDING IN ANTENNA PATCH PANEL

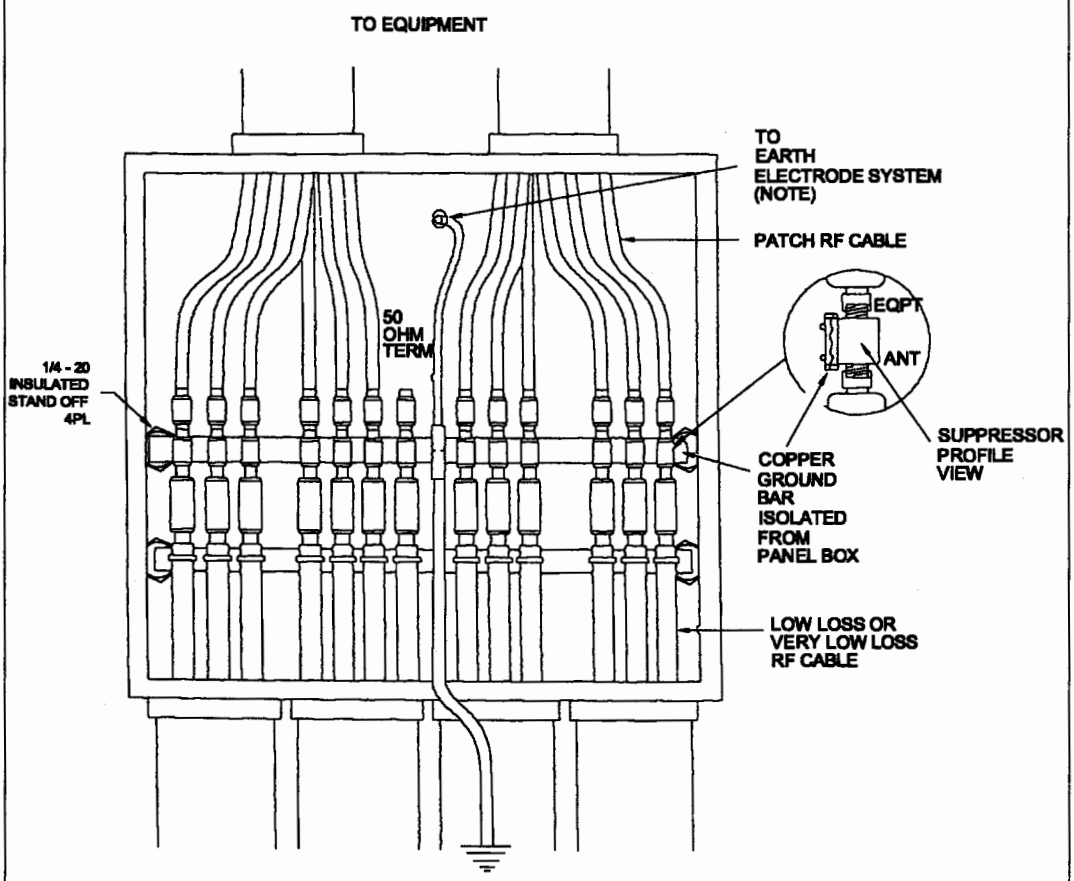

NOTE:
1. IF PATCH PANEL IS INSTALLED EXTERIOR TO BUILDING GROUNDING CABLE MAY EXIT AT BOTTOM OF ENCLOSURE (X).
2. ALL WIRE SIZES REFER TO FAA-STD-019

FIGURE 4-23. LIGHTING PROTECTION FOR UNDERGROUND CABLE

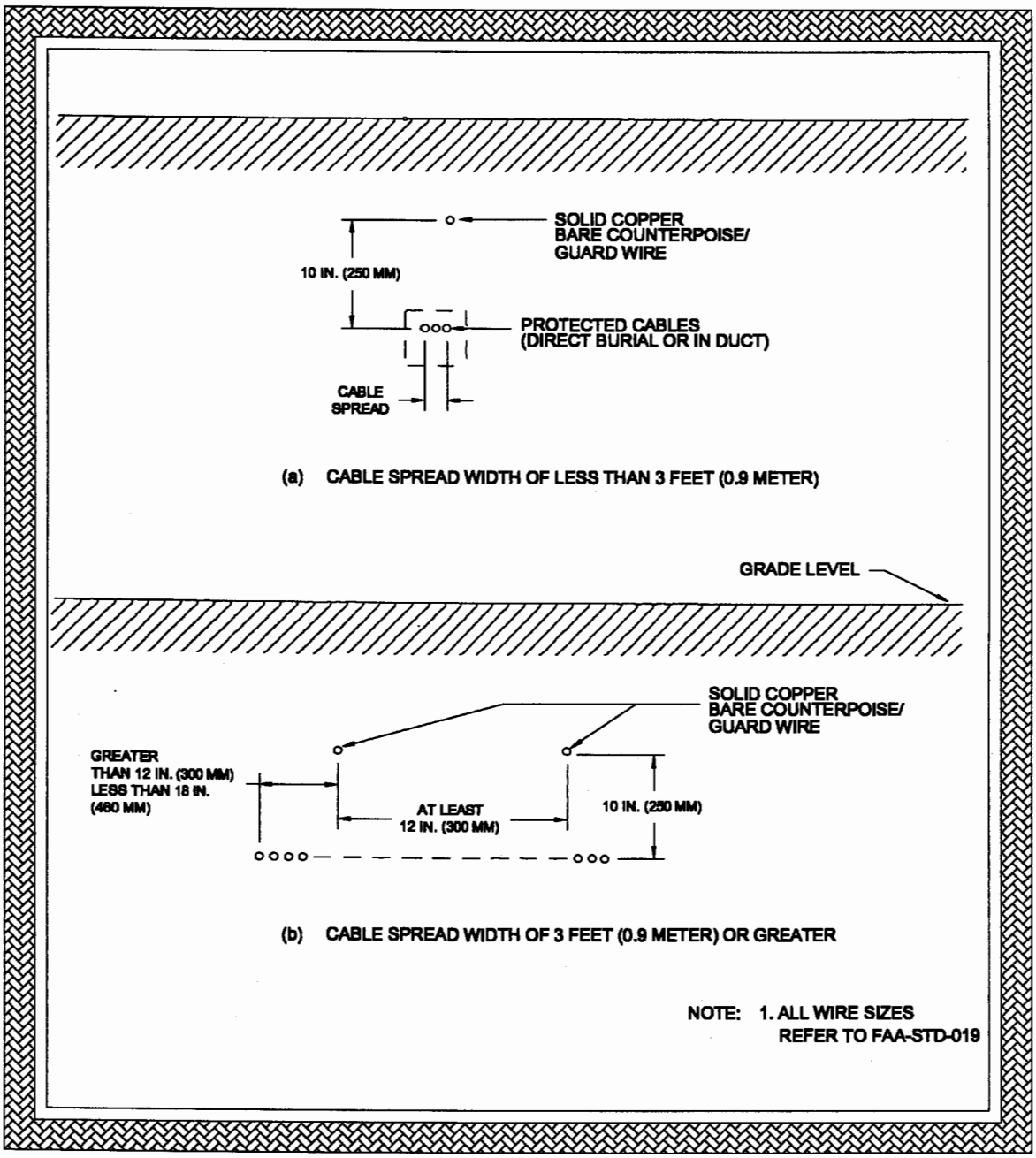

SECTION 4. MULTIPOINT GROUND SYSTEM

106. REQUIREMENTS.

The RCF multipoint equipment ground system consists of interconnected, normally non-current carrying, metal objects. The system is required by FAA-STD-019 to include at least two low impedance electrical paths to the earth electrode system. This system connects equipment frames, cabinets, racks, conduits, wireways, cable trays, outer cable shields, steel structure, and interconnection conductors. The multipoint ground system provides low impedance ground paths between interconnected metal in various locations within the facility and interconnected metal ground plates within the facility to the earth electrode system.

107. INSTALLATION.

The multipoint ground system is designed to protect electronic equipment from potential differences and static charge buildup. The multipoint ground system shall be separate from the single point ground system, except after a main ground plate. From that main ground plate both systems share a common conductor directly to the earth electrode system. The AC protection ground (green wire) must maintain a separate path and must connect to the earth electrode system only at the service disconnect means and at the power company ground. A buried cable connection to the power company ground is recommended. Separation of these three grounding systems minimizes transient current induction. The multipoint ground system shall use copper conductors with green insulation and an orange tracer. Each facility shall use a multipoint ground plate and branch plates as necessary. For an RCF having less than 100 square foot a multipoint ground system is not required.

a. Multipoint Ground Plate. The multipoint ground plate shall be a copper plate mounted on insulated spacer material and secured with insulated hardware per FAA-STD-019 as illustrated in Figure 4-24, Multipoint Ground Plate. Ground plates and buses shall be identified with a permanently attached nonconductive cover label that is predominantly green with distinguishing bright orange slashes. The label shall bear the caption ELECTRONIC MULTIPOINT GROUND SYSTEM in black characters. This marking and labeling can be on a plastic cover (with suitable length spacers) over the copper plate.

FIGURE 4-24. MULTIPOINT GROUND PLATE

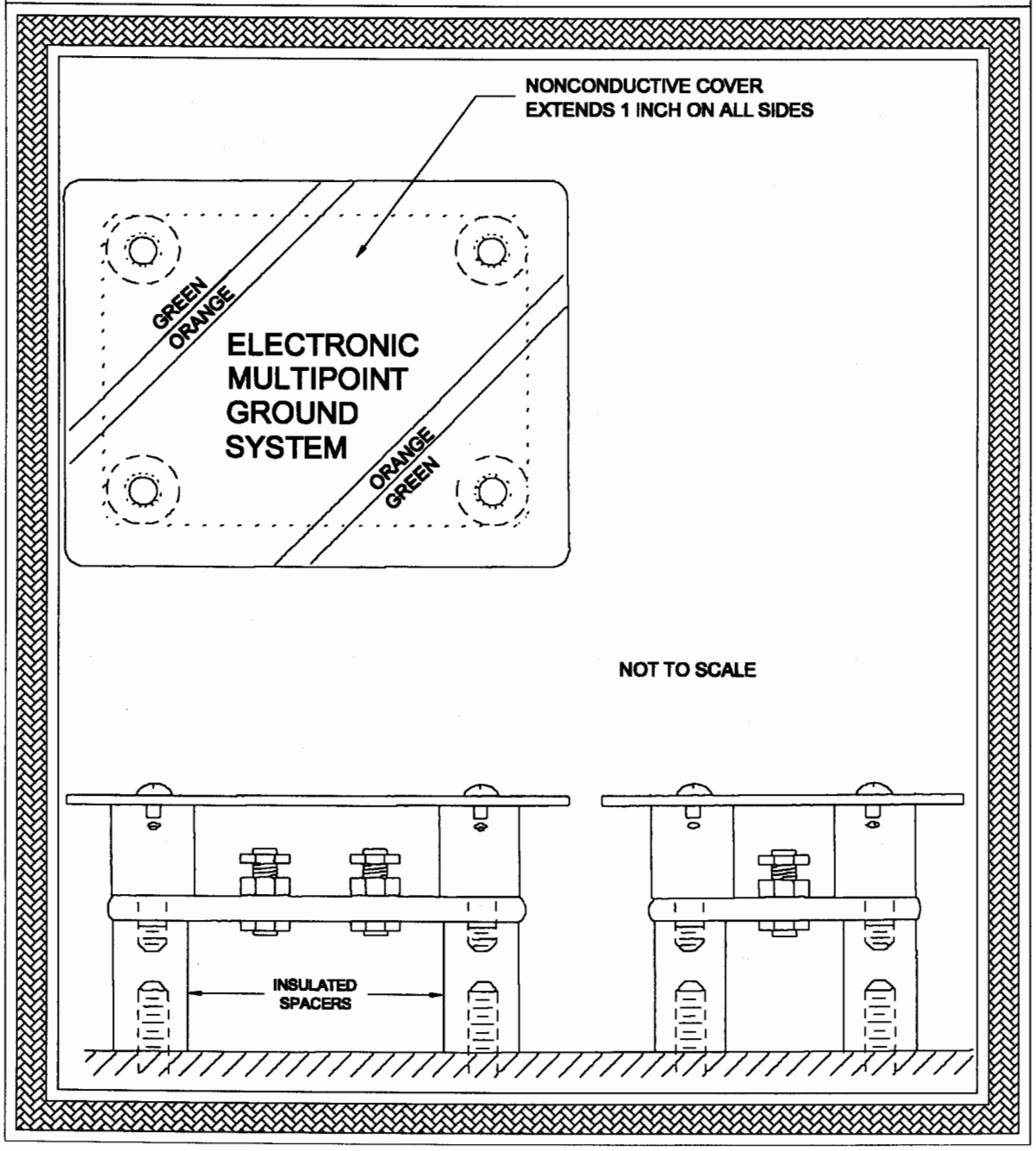

FIGURE 4-25. MULTIPOINT GROUND INSTALLATION

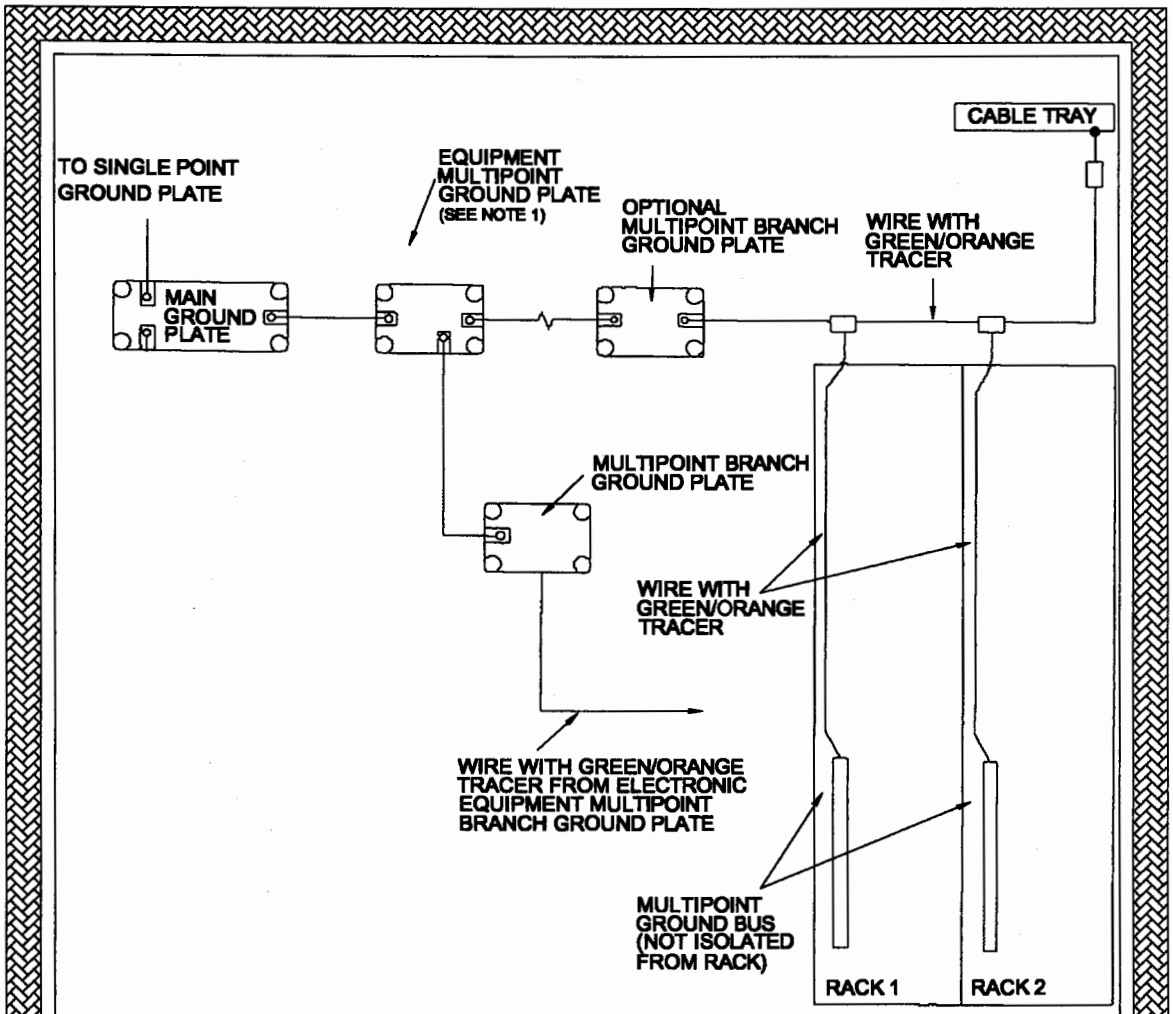

NOTE 1: THE EQUIPMENT MULTIPOINT GROUND PLATE IS TO BE INSTALLED ADJACENT TO THE MAIN GROUND PLATE
SEE DETAIL DRAWINGS FOR CLARITY
4/0 CABLE TO BE USED UNLESS EXCEEDS 13 FEET

b. **Multipoint Branch Ground Plates.** Multipoint branch ground plates shall be used to minimize the number of independent wire runs to the multipoint ground plate. The number and location of branch plates is dependent upon site requirements. An illustration of a facility multipoint ground system is shown in Figure 4-25, Multipoint Ground Installation.

c. **Multipoint Ground Conductor.** A series daisy chain arrangement shall be used to interconnect the multipoint ground plate with each section of conduit, wireway, and cable tray. This conductor arrangement is used to interconnect equipment "frames, cabinets, racks, and equipment chassis. The connection from multipoint ground to the metal cabinets shall use a pressure type connector as shown in Figure 4-26, AC Ground Bolted Connection. Orange vinyl tape shall be added to a green insulated wire if green with orange tracer insulated copper conductor is not available. Conductor sizes and lengths that shall be used are specified in FAA-STD-019.

NOTE: Ensure that any paint or other nonconductive finishing has been removed in the vicinity of the bolt to provide good metal to metal electrical contact.

d. **Structures.** All structural members should be bonded to the multipoint ground per FAA-STD-019.

108. **RESERVED.**

109. **RESERVED.**

110. **RESERVED.**

111. **RESERVED.**

112. **RESERVED.**

FIGURE 4-26. MAIN AC SERVICE GROUND BOLTED CONNECTION

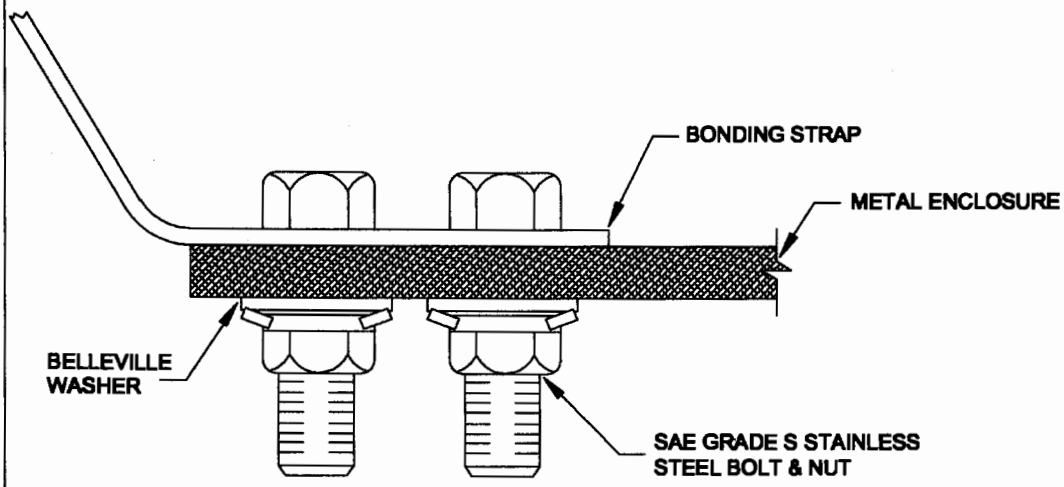

SOURCE:

SAE GRADE S STAINLESS STEEL BOLT & NUT

NOTES:

a. USE STUDDED SPLIT BOLT CONNECTOR, MINIMUM WIRE SIZE #4 AWG, BONDING LUG FOR ALL DISCONNECT SWITCHES & METAL ENCLOSURES

b. REFER TO FAA-STD-19 FOR BOLT TORQUE SPECIFICATIONS

SECTION 5. ELECTRONIC SINGLE POINT GROUND SYSTEM

113. REQUIREMENTS.

Electronic single point ground systems are not required in FAA facilities unless the equipment to be installed requires it. The RCF single point ground system provides an isolated, single ended, low impedance electrical path from shields of low voltage data, communication, and control cables to the earth electrode system. Grounded reference shields must be isolated and grounded at the source end only to prevent loops in the single point ground system. To provide a noise-free ground reference, the single point ground system shall be isolated from the multipoint ground system, except after the facility main ground plate. From the main ground plate both systems share a common conductor directly to the earth electrode system. The single point ground bus shall be isolated copper bars or plates suitable for termination of cable shields and of cables to branched ground plates. Cable shield pigtails terminated on the single point ground bus shall be as short as possible to minimize inductance. Cables connected to single point ground plates and to the single point ground connection on the main ground plate shall be insulated copper conductors coded green with a yellow tracer and must be isolated from all other grounding systems. Branch plates shall be used as needed in order not to violate the isolated, non-looped, single-ended, tree configuration of the single point ground system.

114. INSTALLATION.

The single point grounding system shall be isolated from all other grounding systems except at the tie-in to the main ground plate.

a. Single Point Ground Plate. The single point ground plate shall be a copper plate mounted on insulated spacer material and secured with insulated hardware per FAA-STD-019 as shown in Figure 4-27, Single Point Ground Plate. Single point ground plates and buses shall be identified with a permanently attached non-conductive cover label that is predominantly green with distinguishing bright yellow slashes. The label shall bear the caption CAUTION ELECTRONIC SINGLE POINT GROUND in black characters.

b. Equipment Cabinet Single Point Ground Bus Bar. A solid copper single point ground bus bar, mounted on insulators shall be installed when required by communication equipment. A typical single point ground bus bar is approximately 3/4 inch wide, 1/4 inch thick, and 16 inches long. It is mounted horizontally in the equipment cabinet. Isolation from the cabinet shall be provided by standoff insulators. Each RCF single point ground shall be insulated from the cabinet and all other grounds. An illustration is given in Figure 4-28, Single Point Ground Installation.

FIGURE 4-27. SINGLE POINT GROUND PLATE

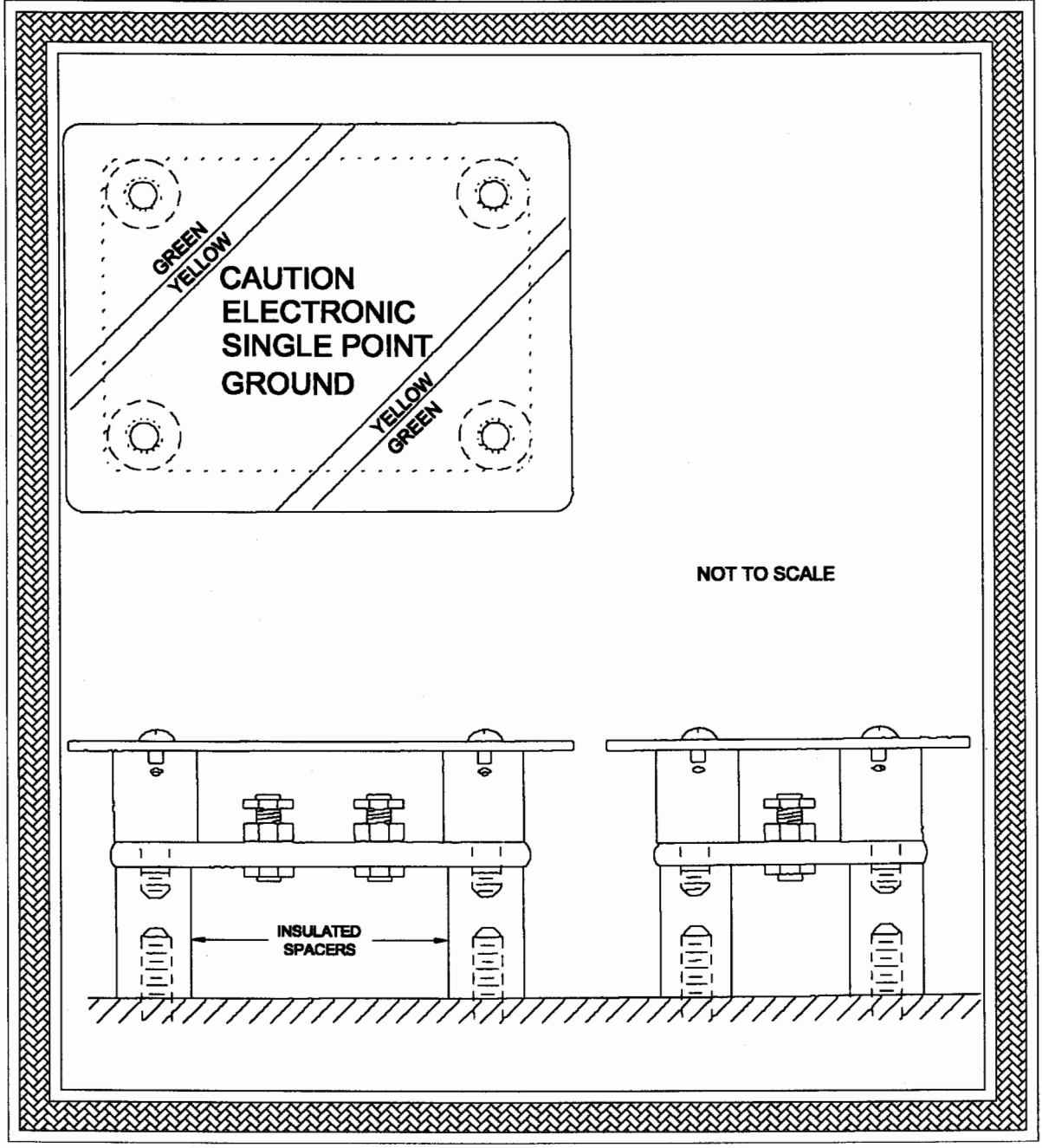

FIGURE 4-28. SINGLE POINT GROUND INSTALLATION

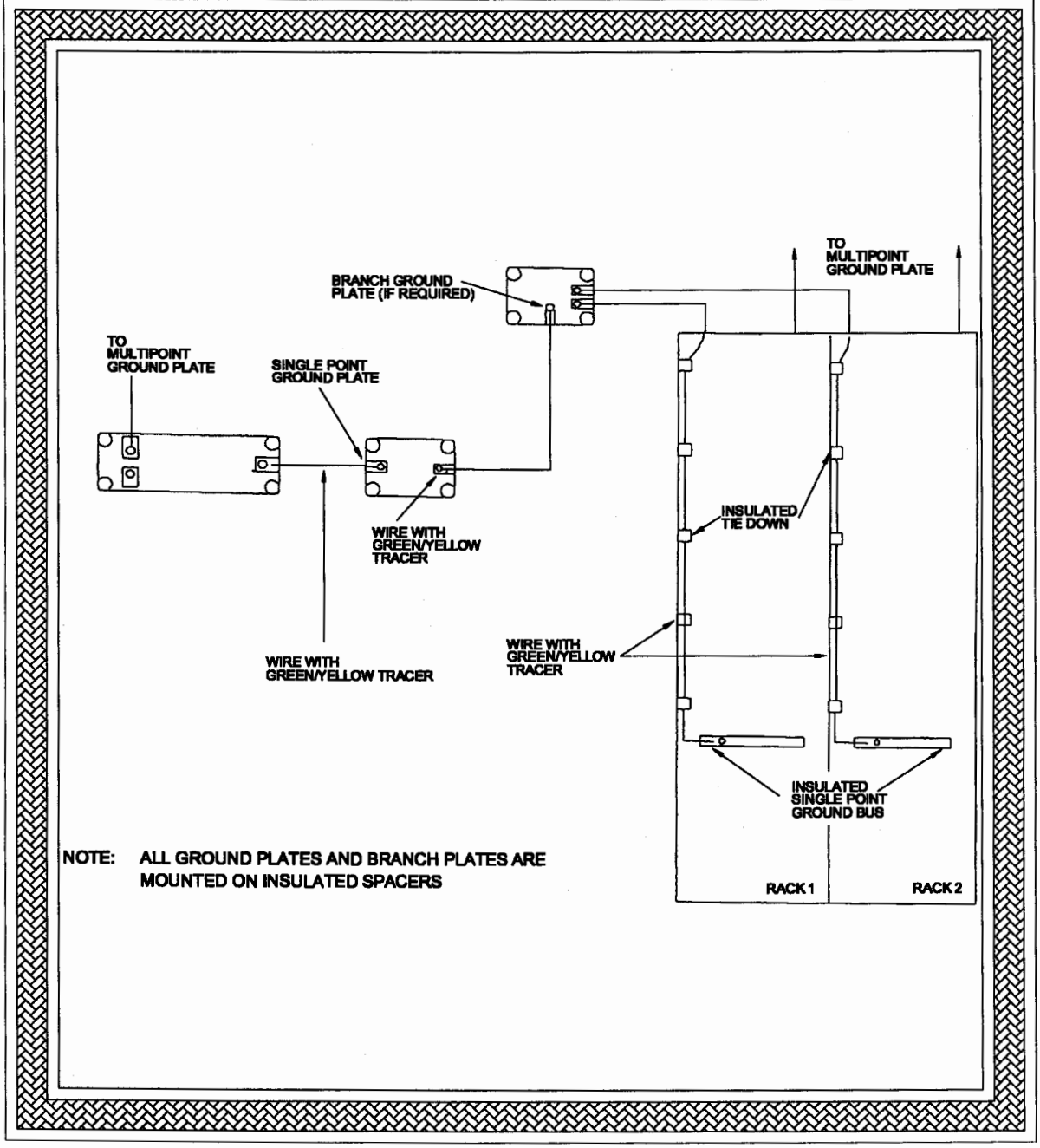

c. **Interior Single Point Ground Conductor**. A green with yellow tracer insulated copper conductor shall be installed from the equipment single point ground lug to the equipment cabinet single point ground bus. The single point ground conductor for each cabinet shall be connected separately to a single point ground plate or branch plate. Conductor size and length shall comply with FAA-STD-019.

115. RESERVED.

116. RESERVED.

117. RESERVED.

118. RESERVED.

119. RESERVED.

SECTION 6. TRANSIENT AND SURGE PROTECTION SYSTEM

120. REQUIREMENTS.

An operating system comprised of electrical power, communication, and electronic equipment is susceptible to two types of lightning effects. These lightning effects are surges on AC power lines and transients on signal and control landlines connected between an external equipment or structure and a facility. Damage from lightning can be minimized, and in most instances eliminated, by properly using the following protection methods.

121. AC POWER PROTECTION.

Protection from AC power surges caused by lightning shall be provided by the use of surge arresters on the supply side of incoming power lines at the facility service disconnect means and at the entrance at interconnected facilities. Arresters limit the induced voltage by routing excess current to earth until surges are dissipated. These devices shall be sized to limit to an acceptable level of the AC voltage supplied to RCF equipment. Ratings for these devices are found in FAA-STD-019 and FAA-STD-020.

a. Pre-installation Tasks. An existing facility will require the following major pre-installation actions prior to the actual installation of the lightning and electrical surge protection circuit equipment.

(1) Evaluation of Existing Surge Protection. Determine if the facility AC entrance power circuits have lightning protection circuits currently installed. If the protection equipment installed is operating satisfactorily and has operating parameters equivalent to those of the equipment specified herein, no further action is required.

(2) Voltage and Phase of AC Power Service. Obtain a surge arrester that is compatible with the facility entrance power. More specific guidance is provided in FAA documents, FAA-C-1217 Electrical Work, Interior, FAA-STD-019, and FAA Order 6950.19.

(3) Coordination of System Shutdown. Prior to upgrading the surge protection, coordinate all systems shutdowns with involved parties such as operation centers and air traffic personnel.

(4) Location of Surge Arrester. Surge arresters shall be mounted on incoming AC lines per FAA-STD-019. An arrester junction box shall be located immediately adjacent (1 foot maximum)to the main AC service disconnect. Wiring shall be installed per FAA Order 6950.19, Secondary AC surge arrestor installation, grounded service per Fig 2-51.

b. Installation Tasks. Install the AC power surge arrester at the selected location on the incoming AC power lines. If the arrester cannot be mounted directly adjacent to the main service disconnect switch as

illustrated in Figure 4-29, Single Phase AC Power Surge Arrester Installation, or Figure 4-30, Three Phase AC Power Surge Arrester Installation, site adaptation will be required. It is important to keep connections to the arrester as short as possible with no loops or sharp bends.

(1) **Operating System Outage.** Prior to installing surge arresters, if required, coordinate all systems shutdowns with all involved parties such as operation centers and air traffic personnel.

(2) **AC Entrance Power.** Install the surge arrester per FAA-STD-019. If removing AC service is not possible, open the main service disconnect switch to install the arrester after the main service disconnect switch but before the fuses in the load lines.

NOTE: Utilize lockout-tagout when working in the vicinity of energerized circuits.

(3) **Arrester Installation.** Install the AC power surge arrester and verify that the installation is in accordance with FAA Order 6950.19, per Fig 2-51 or Fig 2-52. Follow the manufacturer's special requirements where applicable. Restore the AC power to all RCF systems and ensure that they are operational.

FIGURE 4-29. SINGLE PHASE AC POWER SURGE ARRESTER INSTALLATION

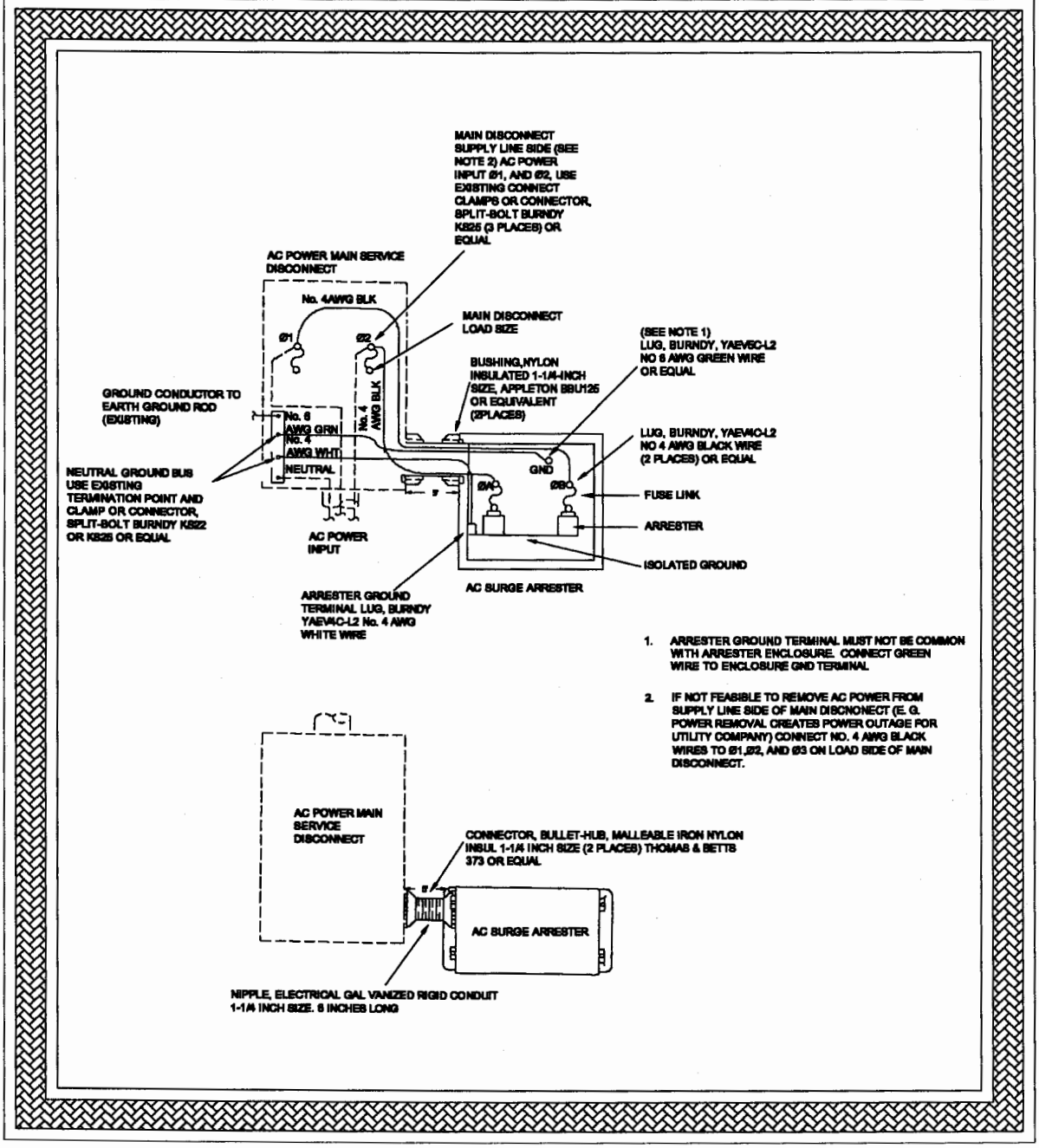

FIGURE 4-30. THREE PHASE AC POWER SURGE ARRESTER INSTALLATION

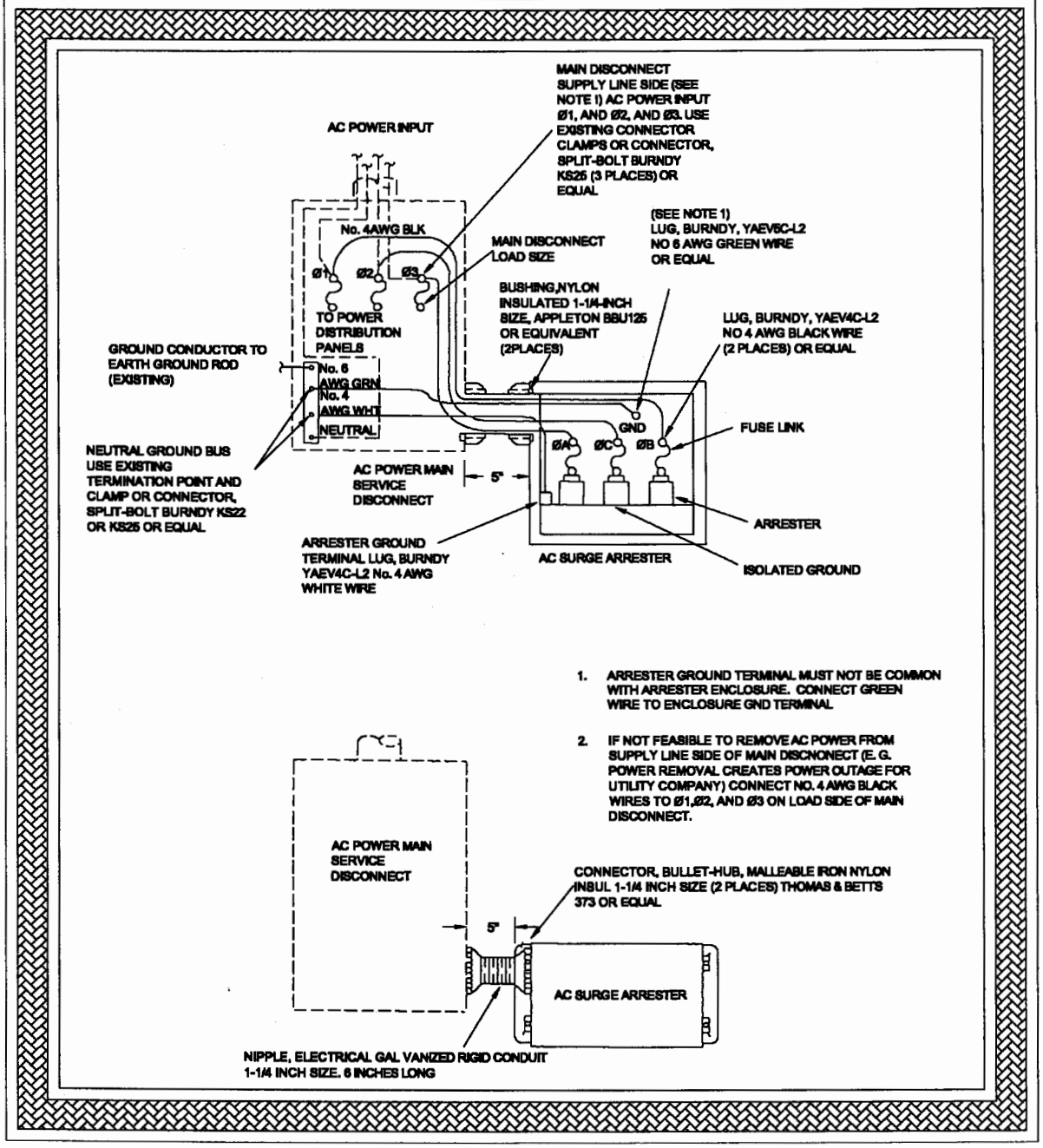

TABLE 4-4. MATERIALS FOR AC POWER SURGE ARRESTER INSTALLATION

ITEM	ITEM DESCRIPTION	QUANTITY
1.	Lightning and electrical surge arrester 120/240V AC, 1-phase, 3-wire, grounded neutral, NSN 5920-01-146-2112	As Required
2.	Lightning and electrical surge arrester 120/208V AC, 3-phase, four wire, NSN 5920-01-146-2111	As Required
3.	Connector, conduit, bullet-hub, nylon insulated, malleable iron, 1-1/4 inch, or equal	2 each
4.	Nipple, electrical, galvanized, rigid conduit, 1-1/4 inch by 6 inches	1 each
5.	Bushing, nylon, insulated, 1-1/4 inch Appleton BBU125 or equal	2 each
6.	No. 6 AWG (Green) stranded, 600 V AC, THW wire	As Required
7.	No. 4 AWG (Black) stranded, 600 V AC, THW wire	As Required
8.	No. 4 AWG (White) stranded, 600 V AC, THW wire	As Required
9.	Connector, split-bolt, Burndy KS22 or equal	1 each
10.	Connector, split-bolt, Burndy KS25 or equal	1 each
11.	Connector, split-bolt, Burndy SERVIT Post Type K2C22, or equal	As Required

c. **Documentation.** Redline all applicable facility drawings. Review the manufacturer's data furnished with the arrester for theory of operation and maintenance data. Provide the site management with all applicable documentation for filing with the facility.

122. TRANSMITTER/RECEIVER PROTECTION.

Each RF coaxial line not protected by continuous ferrous conduit shall have installed at the facility entrance a feed through coaxial transient suppressor with an isolated ground to protect equipment from conducted transients. An example of feed through coaxial cable transient suppressors appears in Figure 4-31, Coaxial Transient Suppressor Mounting.

123. LANDLINE PROTECTION.

Transient suppressors, either feed through or in junction boxes, shall be installed at RCF and support facilities to protect equipment from landline conducted transients in accordance with FAA-STD-019. Multiconductor landlines shall be protected by transient suppressor hybrid circuits which limit peak voltage while shunting excess current to the earth electrode system. Figure 4-32, Landline Protector Circuit Assembly Installation, shows a multipair landline example. Suppressor elements shall be grounded to lightning protection circuit bus bar A. All ground leads must be as short as possible. Verify that bus bar A and its ground leads are isolated from all other ground systems by at least 1 megohm before connection is made to the earth electrode system. Bus bar A shall be connected as directly as possible to the earth electrode system with No.4 AWG insulated stranded copper wire coded green with red tracer. Ground buses A and B shall be isolated from the junction box and from each other. Ground bus bar B shall be connected to the single point ground system with No.6 AWG insulated copper wire coded green with yellow tracer. The junction box shall be connected to the multipoint ground system with No.6 AWG insulated copper wire coded green with orange tracer.

a. **Pre-installation Tasks.** Adequate planning must be performed before any changes are made to lightning protection equipment. Prior notice of any system shutdown must be given for all affected systems.

(1) **Evaluation of Existing Protection Equipment.** The installation of lightning protection circuits and landline lightning protection equipment is applicable to all RCFs and their associated control facilities, including those facilities which have leased landline equipment. In some instances, a host navigational aid facility interfacility landline demarcation box may have to be enlarged to accommodate the RCF landlines. Table 4-5, Existing Installation Lightning Protection Circuits Material, shows a list of materials used for the addition of new protector assemblies. On other host facilities, the existing demarcation box may adequately accommodate the additional RCF landlines. If existing facility landline circuit protection has adequate hybrid devices properly installed, no further action is

necessary. Under no circumstances should additional FAA landline protection circuits be used in parallel with telephone company-provided protection equipment. Any facility landline protection circuitry in which duplication is found must be corrected by removing the FAA landline protection equipment and retaining telephone company-installed protection equipment. If telephone company-provided protection equipment is found to be inadequate, the telephone company must be notified and be requested to upgrade its protection equipment.

FIGURE 4-31a. COAXIAL TRANSIENT SUPPRESSOR MOUNTING

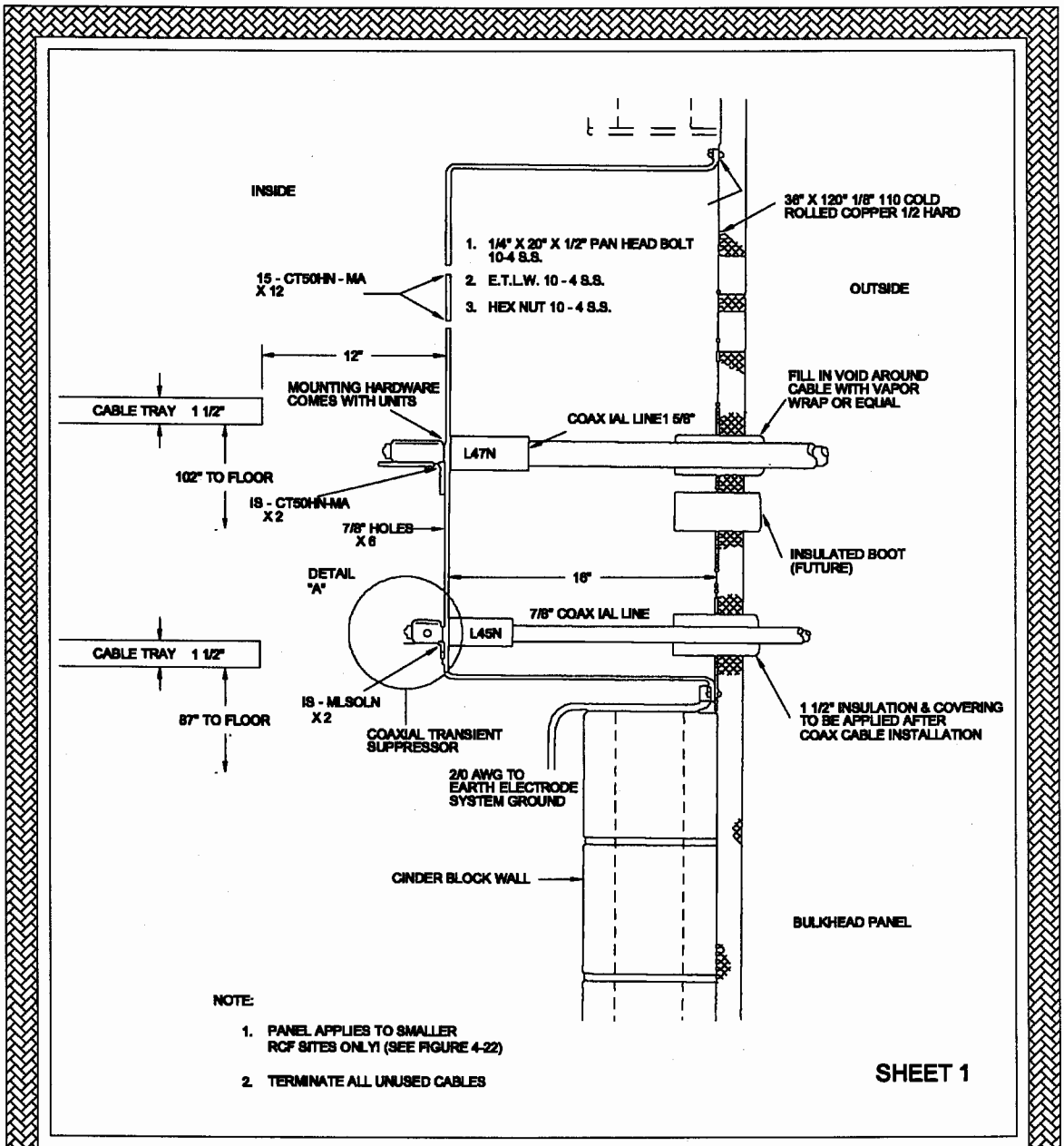

FIGURE 4-31b. COAXIAL TRANSIENT SUPPRESSOR MOUNTING

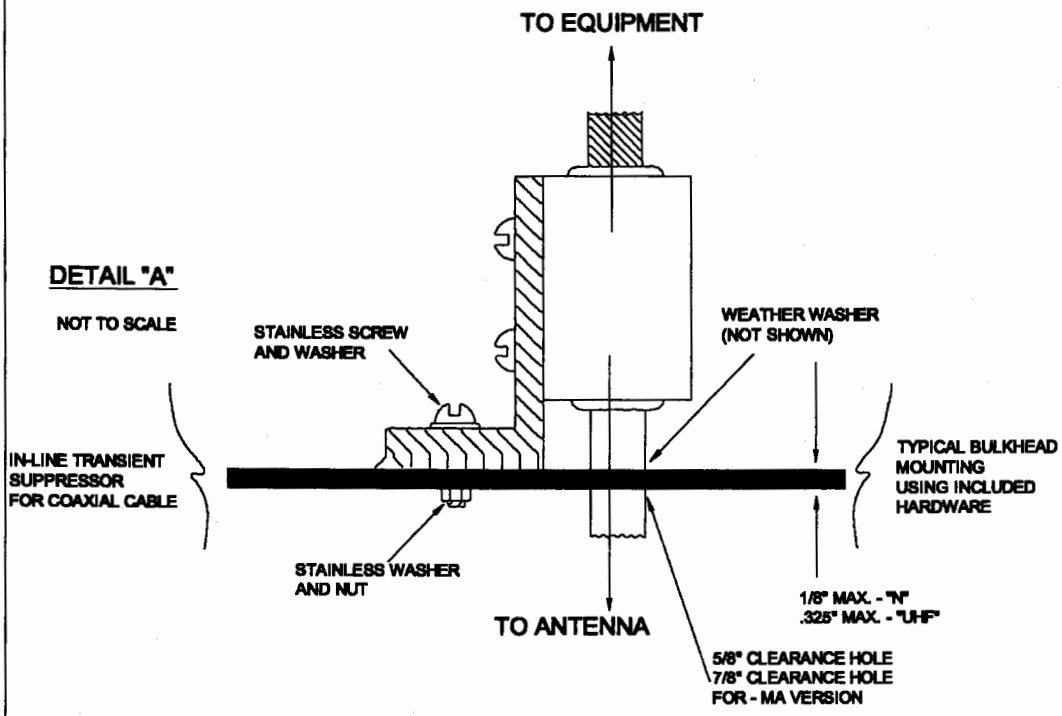

FIGURE 4-32. LANDLINE PROTECTOR CIRCUIT ASSEMBLY INSTALLATION

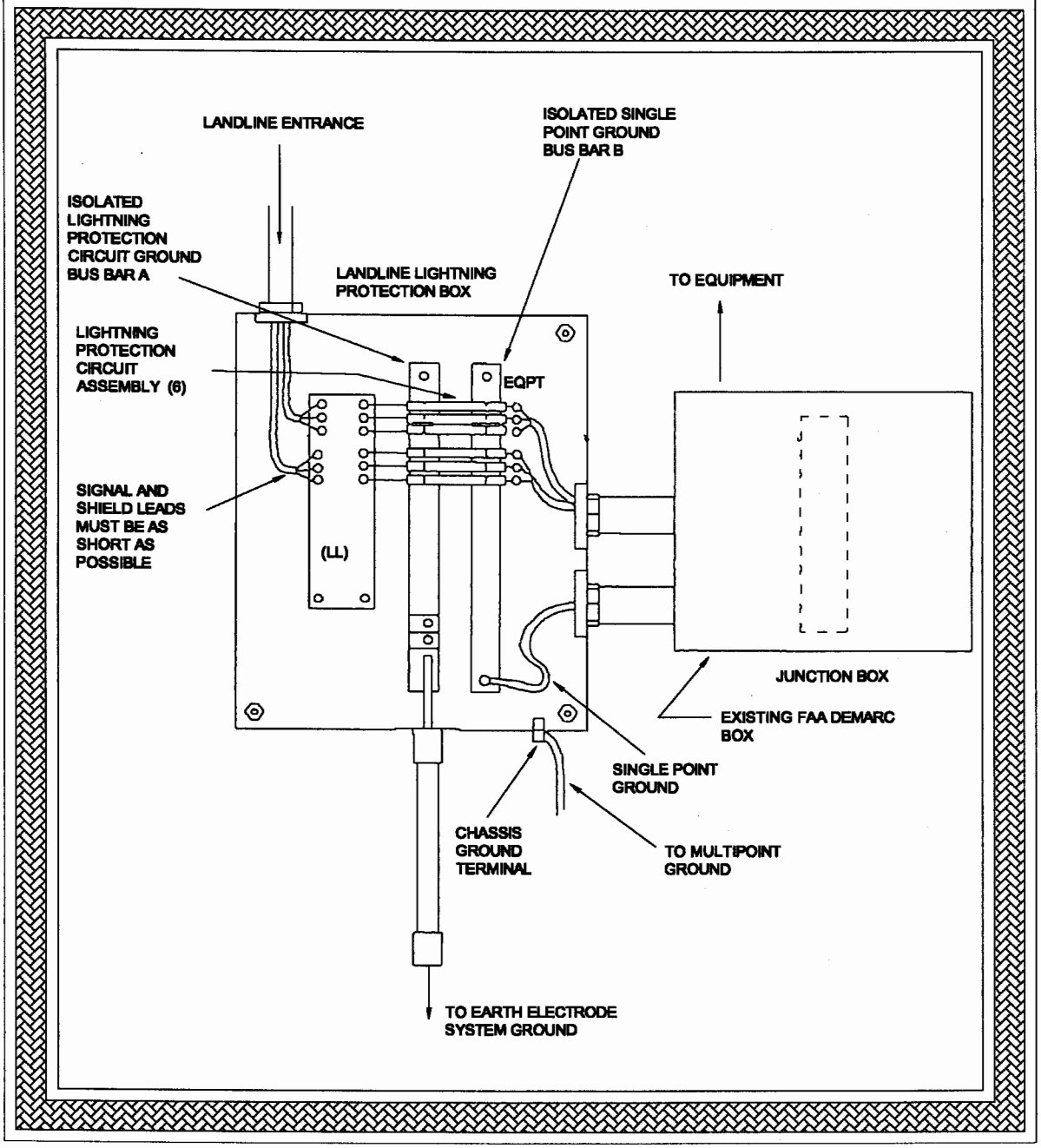

TABLE 4-5. EXISTING INSTALLATION LIGHTNING PROTECTION CIRCUITS MATERIAL

ITEM	ITEM DESCRIPTION	QUANTITY
1.	Screw, machine, No. 6-32 x 1/2-inch	8 each
2.	Lockwasher, No. 6, split, silicon	8 each
3.	Washer, flat, No. 6, 5/16 inch	8 each
4.	Lug, spade, Thomas & Betts RA1203 or equal	12 each
5.	Splice, insulated, Burndy INSULINK, Type SN18, or equal	As Required
6.	No. 6 AWG wire, twisted pair, solid, copper red and black, Alpha 1793, or equal	As Required
7.	Lightning Protection Circuit Assembly, Type PA3-12, printed wiring board, NSN 5920-01-046-4246	As Required

(2) **Coordination of Systems Shutdown.** Request the issuance of a NOTAM and coordinate the shutdown of the systems affected by the temporary loss of audio and control functions.

b. **Existing Facility Installation.** Identify the facility's existing junction box where the landlines are first terminated (normally the facility's demarcation junction box). Installation of the new landline lightning protection junction box to the left of the existing junction box is preferred; physical and circuit constraints, however, may require a different location. A list of materials required for installation is listed in Table 4-6, New Installation Lightning Protection circuits Material.

(1) **Wiring Signal and Equipment Grounds.** The new landline lightning protection junction box shall be wired into the RCF grounding system using a No.4 AWG copper conductor. Refer to Figure 4-33, Landline Lightning Protection Installation, as a wiring guide.

(2) **Documentation of Junction Box Installation.** Redline all applicable facility drawings and provide facility management with all relevant documentation.

c. **New Facility Installation.** Install the lightning protection circuits in the new landline lightning protection junction box.

(1) **Lightning Protection Junction Box.** Identify all landlines in the interfacility demarcation junction box scheduled to receive the lightning protection circuits. Mark each line to identify its function. Measure and record on appropriate FAA forms all signal levels on each line. Remove any existing surge protection devices or circuits presently installed that are inadequate for the combination of new and existing equipment. Figure 4-34, Landline Junction Box Installation, shows assembly components. Document the removal of existing devices. Describe the inadequacy and document the removal of existing devices.

NOTE: Appropriate caution shall be taken since low voltages may exist on landlines.

TABLE 4-6. NEW INSTALLATION LIGHTNING PROTECTION CIRCUITS MATERIAL

ITEM	ITEM DESCRIPTION	QUANTITY
1.	Terminal strip, barrier type, 10 terminal, Cinch 1-141 or equal	As Required
2.	Marker strip, 10 terminal, Cinch MS10-141	As Required
3.	Bar, ground bus, PA-45, per FAA Drawing D-6075-14	2 each
4.	No. 6 AWG, (green with yellow tracer), stranded, insulated copper wire	As Required
5.	Screw, machine, hexagon-head, 10-32 x 7/16-inches, brass, nickel-plated	2 each
6.	Nut, machine, hexagon-head, 10-32, brass, nickel-plated	2 each
7.	Lockwasher, No. 10, external tooth, silicon bronze, neckel-plated	8 each
6.	Insulator, nylon, PA-90, per FAA Drawing D-6075-32	2 each
9.	Insulator, ground bus, PA-90, per FAA Drawing D-6075-32	2 each
10.	Connector, split-bolt, Burndy Type KS17 or equal	2 each
11.	Lockwasher, No. 6, split, silicon bronze, nickel-plated	8 each
12.	Washer, flat, No. 6 5/16-inch brass, nickel-plated	8 each
13.	Compound, sealing, Chico A3, or equal	1 lb.
14.	Tie wrap, nylon, Thomas & Betts TY-26M or equal	As Required
15.	Lightning Protection Circuit Assembly, Type PA3-12, printed wiring board, NSN 5920-01-046-4246	As Required

FIGURE 4-33. LANDLINE LIGHTNING PROTECTION INSTALLATION

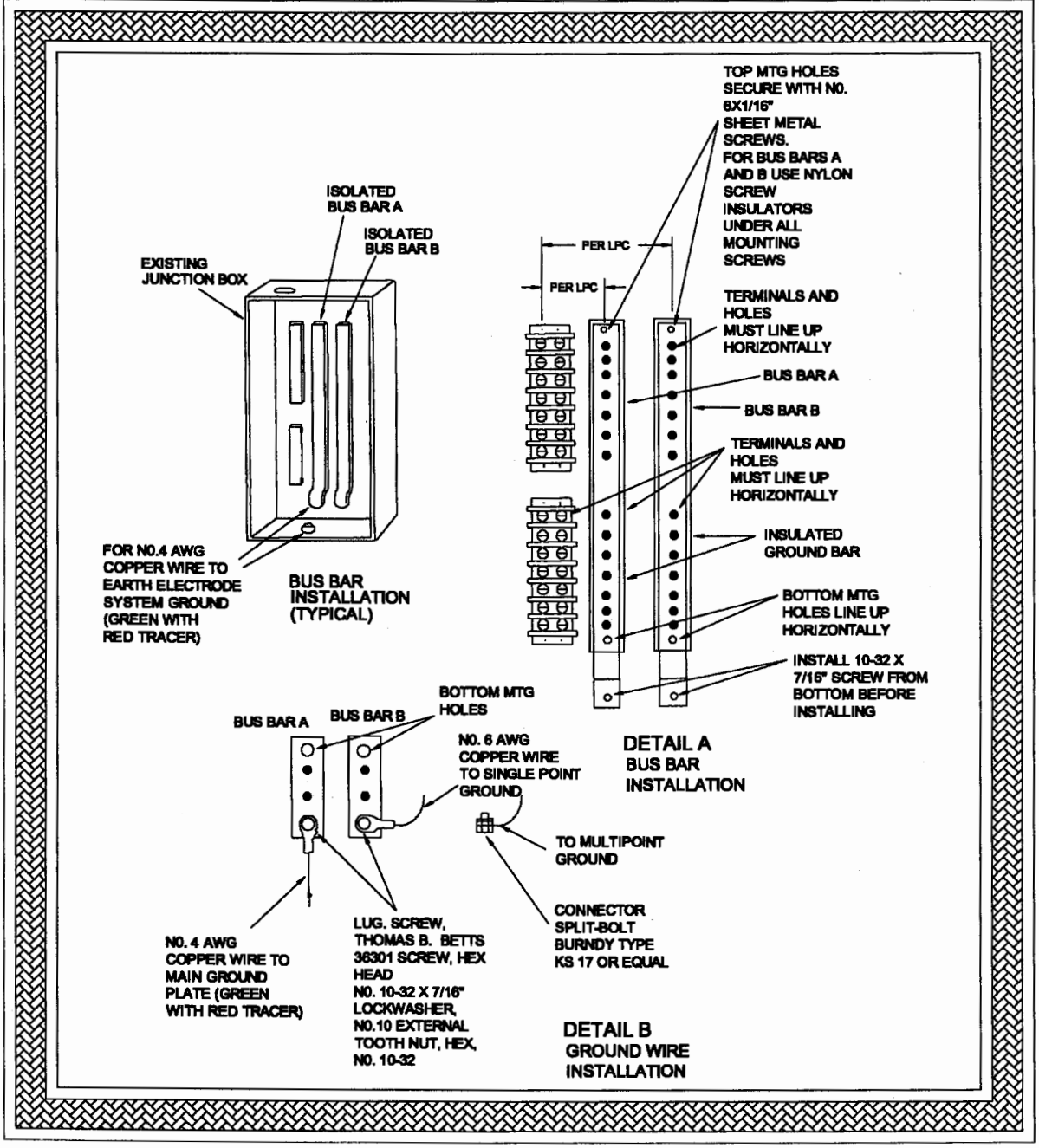

FIGURE 4-34. LANDLINE JUNCTION BOX INSTALLATION

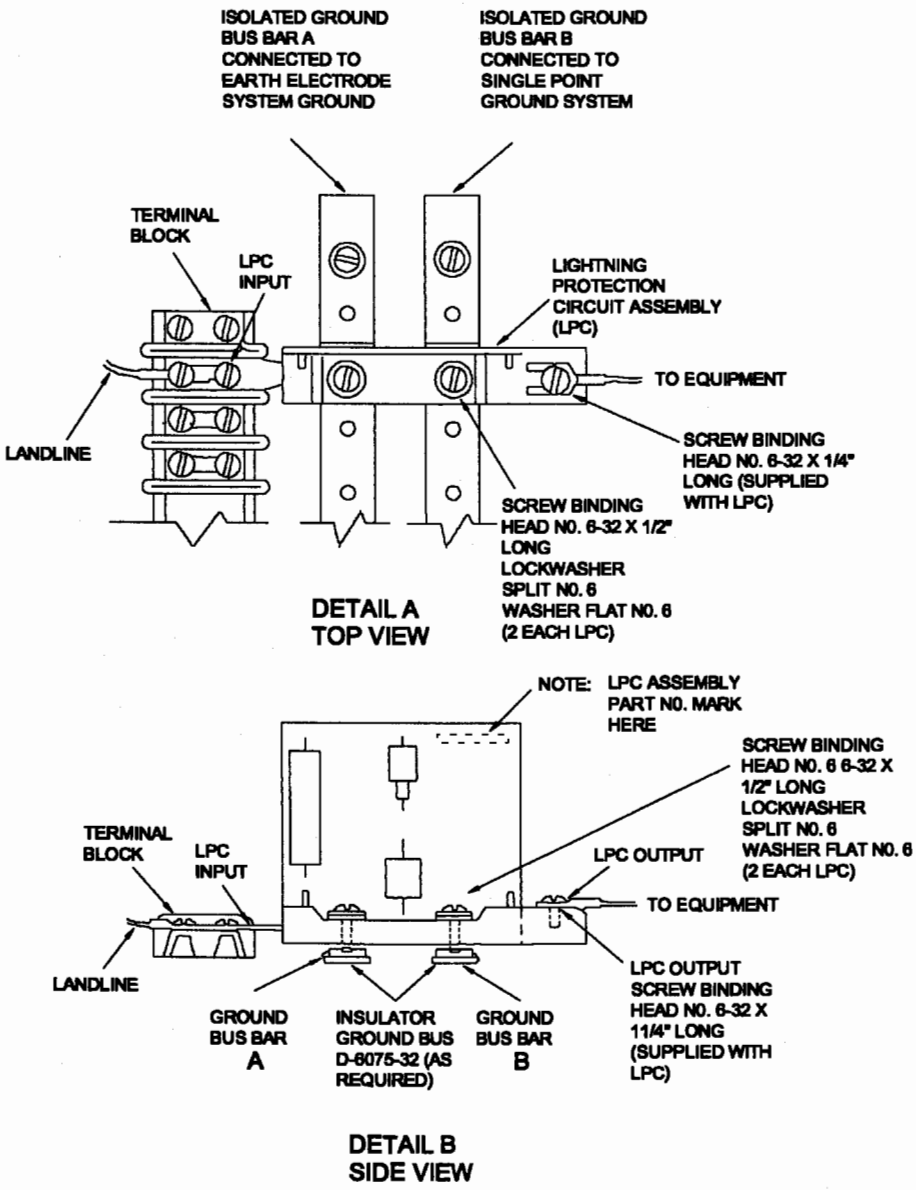

(2) Inspect Systems for Proper Operation. Measure and verify the signal levels previously measured. Some loss in signal may occur.

(3) Return Systems to Service. Return all affected systems to full service.

(4) Documentation of Installation. Redline all applicable facility drawings. Review the manufacturer's data furnished with the lightning protection circuits for theory of operation and maintenance. Provide facility management with all applicable documentation.

124. ADDITIONAL LANDLINE PROTECTION.

Damaging voltage transients are abnormally high pulses that exceed a circuit's operating voltage. These pulses are random in nature and are produced by various sources, such as, lightning, electrostatic discharge (ESD), AC-power faults and induced voltages from adjacent transmission lines. The vulnerability of electronic systems requires that the FAA must protect the NAS with external transient-suppression circuitry. Lightning, ESD and inductive load switching can produce electrical transient pulses characterized by high dv/dt and di/dt contributing to electronic component and system failure. A Transient Voltage Suppression (TVS) or Surge Protection Device (SPD) must activate before the systems electronic components are damaged. The device must be capable of dissipating the resultant transient energy while clamping the voltage to a safe level. TVS devices usually limit the over-voltage rise by shunting the transient away from protected components to ground.

a. Gas Tubes. Gas tubes employ an inert gas that ionizes and conducts during a transient event. The inert gas requires time to ionize, taking several microseconds to turn on or "fire". The reactive time and firing voltage are dependent on the slope of the transient front. A circuit protected by a gas tube will typically see an overshoot voltage ranging from a few hundred volts to several thousand volts during a fast rising ESD pulse or lightning strike. Gas tubes have a finite life cycle, slow response time and non-restoral under DC. Gas tubes are effective as primary facility protectors handling very high current in telecommunications and AC lines. It is desired to use gas tubes as the first stage (primary protection) and the second stage (secondary protection) as sold state protection.

b. TVS Diodes. TVS diodes are solid-state pin junction devices. A large cross sectional area is employed to allow conduction of high transient currents. These diodes respond instantaneously to transient events with clamping voltage ranges from a few volts to a few hundred volts. The fast response time means that any voltage overshoot is primarily due to installed lead inductance. This device has a limited surge current rating. The FAA has used this type device within hybrid modules such as the Illinois Tool Works Inc. (ITW) Linx module. The modular assembly is capable of handling very high pulse currents. These devices respond in nanoseconds and have

operating voltages starting approximately at 28 volts and up. This device non-restores under DC and has a narrow voltage range. Installing the ITW Linx module in FAA facility telecommunications and landlines will provide secondary protection capturing the fast transients that damage electronic systems. Using TVS diodes and thyristors along with a resetable fuse link or PTC (Positive-Temperature-Coefficient), FAA and privately contracted telecommunications service will improve. This effort to improve our facilities shall include an evaluation of the site to locate existing types of protection, including connections to an approved FAA-STD-019 grounding and bonding system. All incoming telecommunications lines should have older resistor block protectors replaced with gas tube protectors. Resistor block protectors are a noise source in circuits. Gas tube protectors will serve as primary protection. The ITW Linx module will provide the secondary protection with a resetable fuse link and TVS solid-state devices mounted on 66 block modules. All grounding in accordance with FAA-STD-019 shall provide a Transient Plate to connect primary and secondary protection grounds and direct connect to the facility Earth Electrode System (EES). No primary and secondary protection grounds shall interface the Multipoint, Single-Point or Main Plate grounding. The Transient Plate shall be the only interface providing direct connection to the EES.

c. Transient Grounding. Manufacturers routinely construct their electronic equipment circuitry to utilize the AC ground as a zero voltage data signal reference. In 1988, research engineers at the now National Institute of Standard and Technology (NIST) learned that transient surge suppression referencing the AC ground for their suppression path were detrimental to the operation of interconnected electronic equipment. Transient protection connected through the AC ground contaminated circuits as they surged the AC ground during normal suppression operations. After setting parameters and conducting tests the researchers found damaged components attached to electronic interfaces. The component damage was attributed to the coupling of transient energy into the electronic interface from the surges that were diverted to the AC ground circuit. This experiment verified that suppressors referencing the AC ground not only causes circuit service disruptions, but also were responsible for hardware interface failure. FAA shall not use facility AC ground for transient protection.

d. PTC-2 Resetable Fuse. The PTC-2 resetable fuse link will benefit more the telecommunications service more than the fuseable link. The PTC-2's first stage employs a resistor Temperature-Coefficient to limit the current during AC Power-Cross faults, meeting requirements of Bellcore 1089 and UL 1459 (See Figure 4-35 PTC-2 Resetable Fuse Link). PTC resistors are typically 4 to 7 Ohms in pretrip resistance values. The PTC resistor limits the current to the solid state protection elements under transient conditions, slightly reduces the signal amplitude. A condition by some other PTCs manufacturers should be known to technicians due to a characteristic of increasing resistance during life-cycle suppression operations. Two varieties of PTC are marketed - Ceramic and Polymeric. The

ceramic variety is characterized by increasing impedance during a life cycle of operations. Another unfavorable characteristic of the Ceramic PTC is the internal material collapsing into itself causing a dead short. ITW Linx markets Polymeric PTCs, which do not have the characteristics of Ceramic PTCs.

FIGURE 4-35 PTC-2 RESETABLE FUSE LINK

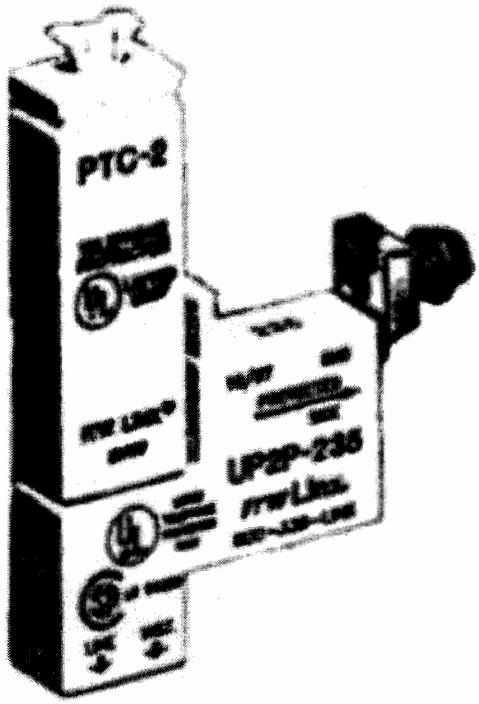

e. In-Line Fuse. An alternative to using PTCs is in-line fuses. In-line fuses require immediate replacement when a current exceeding its rated value is applied. Service will be lost until replacement of the fuseable link is accomplished. ITW Linx offers three types of fuses for use in FAA facilities. The SCP-9F is rated 750 ma (opens @1.125 a within 90 s & opens@ 2 a within 30 s). The SCP-2x2 and MP-SCP are rated 1.2 a (opens @1.8 a within 1.0 s & opens @2 a within .09 s). Also, the SCP-2x2 provides easy test points. The PTC-2 is rated at 160 ma (opening @1 a within 6.0 s & 2 a within 2.0 s). To analyze these circuits See Figure 4-36 Solid State Circuits.

(1) Suggested PTC Devices. The UP2HP-235 (T1, LAN & ISDN services) a primary/secondary protector with bridging and PTC-2 resetable fuses. The UP2P-235 (other telco equipment and CO trunk and landlines services) is a secondary protector without bridging and with PTC-2 resetable fuses.

(2) Testing of PTC Devices. Replaceable sneak current protectors (PTCs) are designed to open the circuit at excessive current levels. Testing the in-line PTC (protector/device) is accomplished by inserting ohmmeter probes into the terminals. If the ohmmeter reads 12 ohms, the PTC should be replaced. To test for over voltage conditions, one probe is attached to ground. If a measurement less then infinity is obtained, the PTC should be replaced.

FIGURE 4-36 SOLID STATE CIRCUITS

Regular Speed

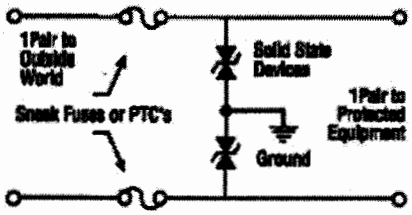

High Speed

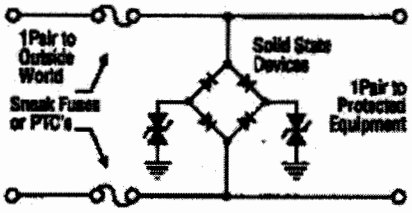

Typical Circuit — Solid State Protection with Resettable PTC Fuses

Provided by ITPE

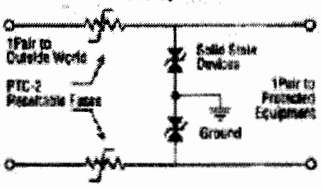

(3) **Testing 5-Pin Devices.** Testing five-pin modules and the ITW-Linx devices will be aided by using a Surge Protector Test Set. It is desired that FAA technicians have access to a test set, Luscent/Joslyn Surge Protector Test Set, after improvements to telecommunications and landlines terminating into their facilities. The Luscent/Joslyn Surge Protector Test Set, Model 4020-01, is a battery-operated and designed to test industry standard five-pin modules and station protectors. Protectors may be tested for breakdown and insulation leakage, heat coil resistance and bridge lifter operation. The Model 4020-01 will test standard carbon, gas tube, MOV and solid-state protectors. Testing these devices is non-destructive. The Standard five-pin protectors are inserted for testing into test set. In addition the test set provides connections for test leads to check other devices. See Figure 4-37 for internal details of the 5-Pin Device.

FIGURE 4-37 SWITCHES

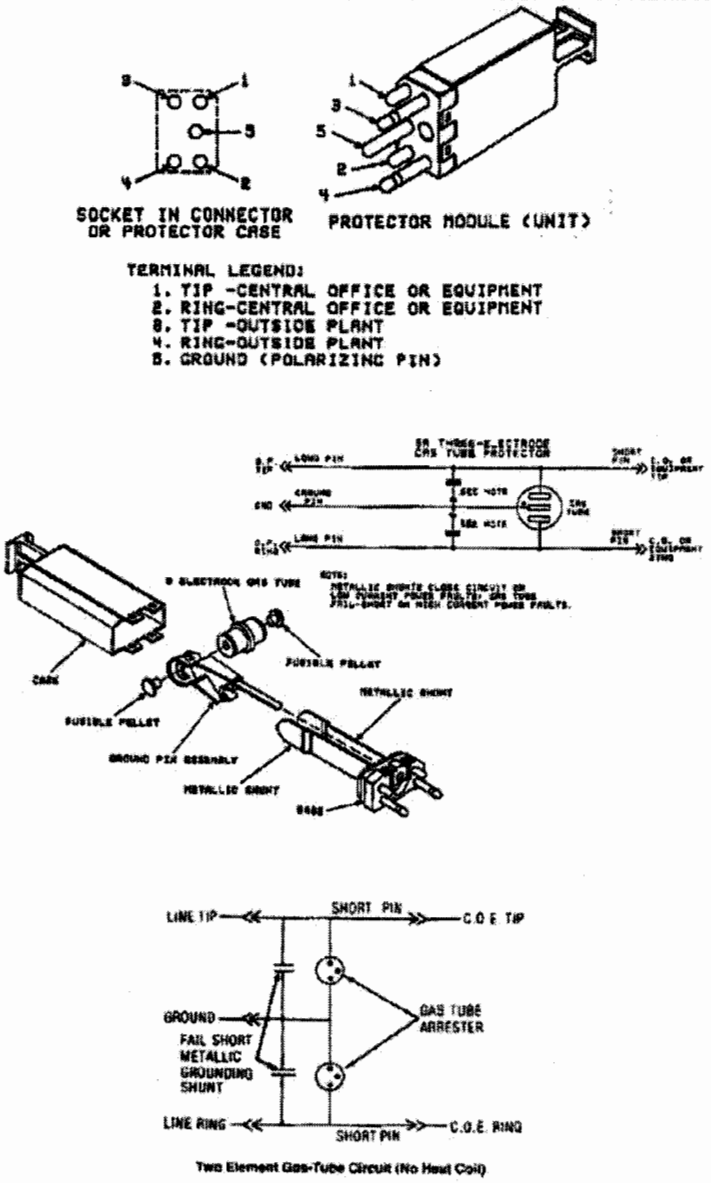

*Base is often used for mounting an external spark gap assembly.

(4) Five-Pin Protector Types.

Cook Electric or Northern Telecom

TYPE	RATING	PROTECTION
3A BLK/RD	350/450V	Voltage protection w/carbon block, air gap & fusible metal alloy
4A BLK/RD	350/450V	Voltage, sneak current & power fault protection w/carbon block & heat coil
7X BLK/RD	400V	Voltage protection w/ dual gas tubes and spark gaps
8X BLK/RD	400V	Voltage & Sneak current protection w/dual gas tubes, heat coils & spark gaps
9X BLK/RD	400V	Voltage protection w/single triode gas tube & spark gaps

Northern Telecom

TYPE	RATING	PROTECTION
9XW BLK/RD	300-500V	Voltage protection w/single triode gas tube & spark gaps
9X BLK/RD/ORG	300-500V	Voltage protection w/single triode gas tube & spark gaps
9A	300-500V	Voltage protection w/single triode gas tube

Reliance Comm/TEC

TYPE	RATING	PROTECTION
G4A - ORG G4AB - BLK G4AR - RD	350V	Voltage & sneak current protection w/triode gas tube pair, heat coils & spark gaps
G4AVS - ORG G4ABVS - BLK G4ARVS - RD	350V	Voltage & sneak current protection w/triode gas tube pair, vented heat coils & spark gaps
6AU20	350V	Voltage protection w/gas tube pair; has spark gaps

Marconi

TYPE	RATING	PROTECTION
R4B1EJZ	350V	Voltage & sneak current protection

BLK		w/gas tube pair & vented heat coil; uses an extended life new gas tube technology

TYPE	RATING	PROTECTION
R4B3EJZ RD	350V	Voltage & sneak current protection w/gas tube pair & vented heat coil; uses an extended life new gas tube technology

(5) **Recommended Five-Pin Protectors.** The Marconi types are preferred for use in FAA facilities. These devices incorporate an environmentally robust form of gas tube technology in applications that have an uncontrolled environment and severe lightning exposure. The electrical surge endurance exceeds 3000 strikes without incidence and is used in areas of frequent transient over-voltages. The fact that FAA operational services impact aviation safety upon an outage, it is considered the Marconi JZ380 series five-pin protector as an improvement over other types. FAA should install the above rated Marconi types in all FAA landlines and make recommendations that TELCO also installs this type of protection. The black (BLK) five-pin protector will be installed on all lines not considered operational, such as phone extensions and remote monitoring. In order to distinguish operational Air Traffic circuits, FAA should install the red (RD) five-pin protector. Both have the same protection qualities, however it is the red color of the five-pin protector housing that indicates the circuit services as Air Traffic operational.

(6) **Installation Procedures.** The below procedures is in compliance with FAA-STD-019. Although, FAA is required to get approval of any devices fielded into our facilities, the architecture of Primary & Secondary Protection complies with several industry standards and specifications, such as, Bellcore/Telcordia GR-1089, FCC Part 68, United Laboratories UL 1459 and International Telecommunications Union (ITU) K series (See Figure 4-38 Primary And Secondary Telco). Some FAA facilities have elected to provide only the secondary protection or a hybrid device, even though the configuration below remains the selected choice of engineering in a NAS facility.

FIGURE 4-38 PRIMARY AND SECONDARY TELCO

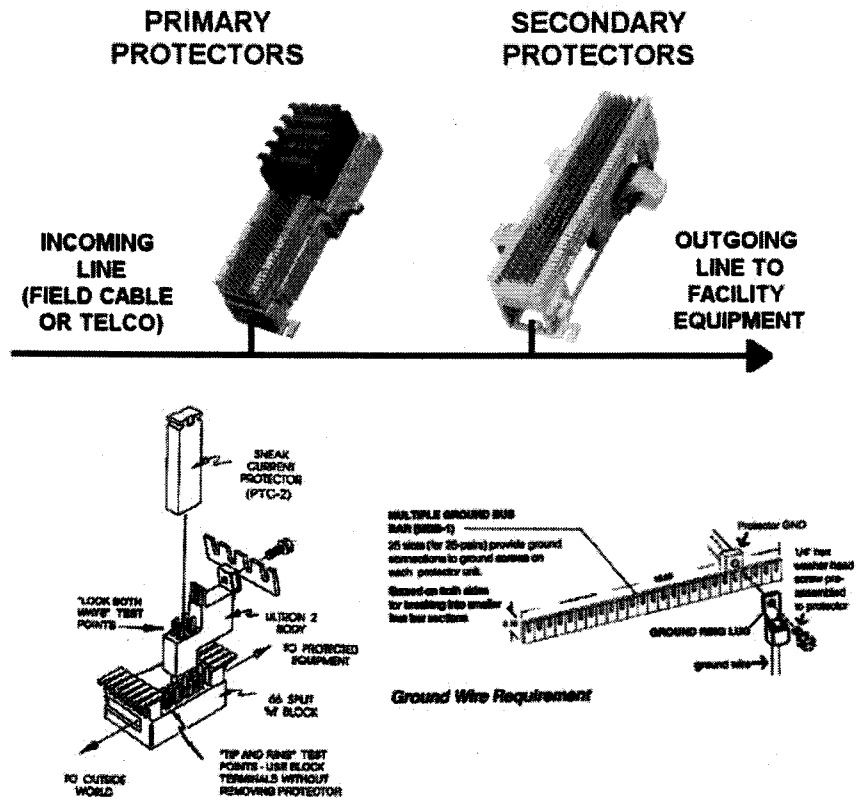

(7) Installation Notes:

(a) Never install devices during lightning activity.

(b) Disconnect service at the network interface before installing a primary/secondary protector.

(c) Sneak current protector rating is often marked on the protector housing.

(d) The protector shall be installed in accordance with NEC and ANSI/NFPA-70, Article 800, Section C.

(e) Mount protectors on an approved 66MX-XX or type Seimon block. Each device will directly plug onto the 66 blocks. Some facility blocks are wired horizontally tip - ring. The ITW Linx protector is wired vertically tip - ring. If a facility block is wired horizontally than install a separate block to accommodate the ITW Linx or replace the wiring configuration. Many 5-pin protectors plug into 66 block configurations wired horizontally (tip - ring). The 5-pin protector and block may be used and wire connected to a separate block for the ITW Linx protectors. All 5-pin protectors will serve as primary protectors and be gas tube type. Any older resistor block 5-pin protectors shall be removed and replaced with gas tube type. The distance between primary and secondary protection shall be less than 5 feet. The short CU line length enhances the loss in dv/dt and di/dt and is an expensive method to mitigate the intensity of transients and high energy.

(f) Ground the ITW Linx protectors with multiple ground bar (Linx No. MGB-1). Break the required MGB-1 length by utilizing the score lines on the bar. Mount the MGB-1 under the grounding screws, position with open slots away from the block base, and tighten all green ground screws.

(g) Attach a screw ground lug (Linx No. SGL-1) to the center protector.

(h) Attach a ground wire to the center protector and connect the other end to the transient ground plate as per FAA-STD-019. Use minimum AWG #6 ground wire size. For ground lengths in excess of 60 feet, use the next larger diameter wire gauge.

(i) Use facility documentation to identify all telecommunication (Telco & FAA Cable) terminations. All identifying line discrepancies shall be corrected by redlining copies of facility documentation or drawings. Corrected information on facility telecommunications shall be forwarded to the Regional Office for updating information and drawings.

(j) Use proper telecommunication practices for installing terminations and identify analog verses digital lines. Use red colored shell casing of any five-pin protector that identifies Air Traffic operational service. The black colored shell casing for five-pin protectors will identify all other circuits.

(k) Terminate all unused pairs into a short and through a bonded ground to the EES.

(l) Prior to removal of telecommunications circuits from service, coordinate all activities with local AF maintenance.

125. **RESERVED.**

SECTION 7. TESTING

126. CRITERIA.

The ground systems installed at an RCF shall comply with grounding, bonding, shielding, and transient protection standards as stated in FAA-STD-019. All ground connections shall exhibit a resistance value of less than 1 milliohm as measured across the junction of exothermic welds, clamps, and terminals. This measurement shall be made with a 4-terminal milliohm meter of sufficient sensitivity to measure junction resistance. Testing and inspections are necessary to certify compliance with FAA standards and requirements in NFPA-70, National Electric Code; NFPA-780, Lightning Protection Code; and UL-96A, Installation Requirements for Master Labeled Lightning Protection Systems.

127. EARTH ELECTRODE SYSTEM.

Testing the earth electrode system requires an earth resistance tester, YEW Type 3235, or equivalent. Ensure the tester has had a valid calibration certification. An alternate four probe test set may be used in earth resistance measurements. Follow instructions provided in the equipment manual. The earth electrode system shall be tested and shall meet the resistance requirement of 10.0 ohms or less prior to the installation and subsequent to commissioning of RCF equipment.

a. Drawings. The engineering drawings associated with the RCF shall be reviewed to verify the location and dimensions of the existing or newly installed earth electrode system.

b. Procedure. The earth ground resistance of an existing or newly installed earth electrode system shall be measured without the RCF operating equipment, entrance power, and landline lightning protection equipment connected. An existing earth electrode system may not meet minimum resistance requirements because of system deterioration, improper installation, or site conditions. Detailed analysis and procedure can be found in FAA Order 6950.20.

(1) Measure Earth Resistance. Measure the resistance of the earth electrode system using an earth resistance tester. DO NOT test the earth electrode system within 72 hours following rain, or if the ground is frozen. The YEW 3235 resistance tester, illustrated in Figure 4-39, Earth Resistance Tester, passes a known current between probe E and probe C. Probe P, the potential balance probe, is placed midway between probes C and E. When the meter resistance knob is adjusted so the resistance bridge is balanced, the potentials from probe P to probes C and E are equal and the earth resistance is read from the dial. More than one earth resistance measurement must be made for each site. Maintain the same relative distances for the probes, more than four times the length of the longest ground rod as the distance between probes C and E with probe p midway between E and C. Probe P may be

offset up to 40 degrees from a line between probes E and C if necessary. Use the equipment manufacturer's instructions.

FIGURE 4-39. EARTH RESISTANCE TESTER

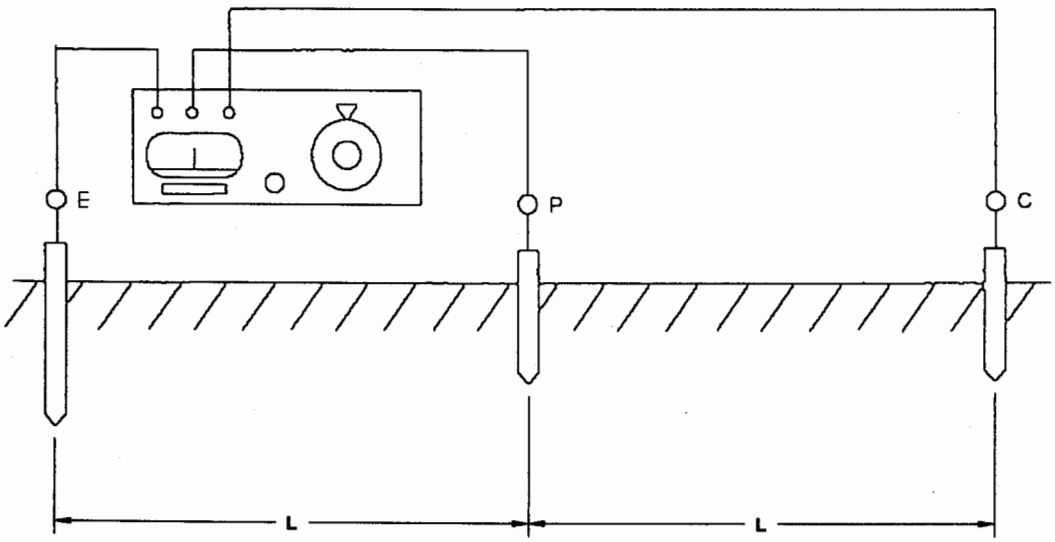

NOTE: CONNECTIONS SHOWN ARE FOR VEW TYPE 3235.

LEGEND

E - EARTH GROUND ROD
P - POTENTIAL PROBE
C - CURRENT PROBE

(2) Locate Ground Rod. To measure the earth resistance of an existing earth electrode system, find perimeter ground rods and their lengths using facility documentation. If necessary, use hand tools to dig a trench from the place where the facility ground conductor exits the building to a perimeter ground rod to locate other rods. Large facility earth electrode systems and systems with longer ground rods have larger electrical fields of mutual inductance. For such facilities the distance required between test probes E and C may have to be more than four times the longest ground rod length for accurate earth resistance measurement. Select a ground rod to use as probe E and make measurements as in (1) above.

(3) Evaluation of Test. Earth electrode system resistance of 10 ohms or less is low enough. Earth electrode system resistance higher than 10 ohms may cause unsatisfactory operation of facility equipment due to an improper single point ground reference level and can prevent surge and transient protection devices from properly protecting the facility. If measurements indicate an earth electrode system resistance is more than 10 ohms and facility operation is inadequate, the earth electrode system shall be repaired or upgraded. If the earth ground resistance of a newly installed earth electrode system exceeds 10 ohms, review the soil conditions and examine the system using paragraphs 88 through 92 in section 2 to determine the cause of the high resistance. Lower the resistance to 10 ohms, if possible, or at least until facility operation is entirely adequate.

128. LIGHTNING PROTECTION SYSTEM.

Equipment that provides both lightning strike and conduction protection shall be inspected and tested for continuity and proper operation. A 4-terminal milliohm meter of sufficient sensitivity to accurately measure junction resistance shall be used to measure the resistance of all bonds, terminal connections, and joints in the lightning protection system. The zone of protection from lightning provided by air terminals shall be verified as adequate to meet the requirements for all facilities and equipment on site. All discrepancies found during the inspection shall be recorded in an inspection log. Discrepancies shall be corrected as soon as possible.

a. Strike Protection. The requirements for protection from lightning strikes shall be fulfilled by air terminals, down conductors, and the earth electrode system.

(1) Air Terminals. Inspect all air terminals for proper material, size, and placement on the structure. Check each air terminal's location, length, and elevation reference with scale drawings defining the zone of protection for site structures. If no such drawings are available, scale drawings shall be made of the zone of protection for the existing site to determine if all equipment and facilities on site are protected adequately. Inspect all mounting hardware for size and type and make sure all fasteners are properly tightened. Measure the resistance of connections to roof or

down conductors and verify compliance with the required one milliohm maximum. Inspect all existing air terminals for damage from previous lightning discharges, corrosion, pitting, breaks, and deformities. Note all discrepancies in the inspection log.

(2) **Conductors.** Inspect down conductors for proper materials, size, and routing. Inspect all mounting hardware for the appropriate size and type, and make sure all fasteners are properly tightened. Measure the resistance of connections to air terminals and the main ground system and verify compliance or noncompliance with the required one milliohm maximum. Inspect to verify that each down conductor is bonded across all tower sections on its path to the bottom of the tower. Inspect buildings to verify that down conductors are bonded to any metal they come into contact with, or are close to, in their paths to the earth electrode system. Inspect all bends and verify that the bend radius is not less than 8 inches and the bend angle is not less than 90 degrees. Inspect all of the conductors and associated components of an existing system for corrosion, pitting, and damage from previous lightning discharges.

(3) **Zone of Protection.** The zone of protection is defined as the space between a 150 foot radius ball of lightning and a structure as the ball rolls up to, over, and down its air terminals. This zone is defined using arcs drawn to scale on elevation site drawings which show all structures, including air terminals and equipment located exactly, and all drawn to scale. The drawings shall include above ground transmission lines and cables, roof and tower conductors, and down conductors. If drawings are not available, actual measurements shall be taken and elevation drawings made to scale for use in verifying that existing overlapping zones of protection for site facilities and equipment provide adequate site protection. If existing protection is not adequate, air terminals can be lengthened, added, or moved to different positions to provide required protection.

b. **Surge Protection.** AC power line protection from lightning generated power surges requires the use of grounded ferrous conduit and power line surge arresters. Inspect surge arrester installation to see if adequate line-to-line or line-to-ground arresters are provided for the facility requirements. Verify by visual inspection that installation requirements are met and, where possible, measure junction resistance of bonds, terminal connections, and conduit ground connections, and verify conduit electrical continuity. The secondary AC surge arrester junction box must be located less than 12 inches from the main service disconnect. Each surge arrester must be connected on the line side of the switch, or line side of the fuse inline to the load, with No.4 AWG insulated copper wire without loops, sharp bends, or kinks. Visually inspect each arrester fuse. If an arrester fuse is blown, replace the arrester or fuse module.

c. **Transient Suppression.** Protection from conducted transients on communication, control, and status landlines entering a facility above or

below ground requires the use of inline transient suppressors at the facility entrance, except for landlines run in watertight continuous ferrous conduit. Axial cables must use axial feed through transient suppressors. Unused wires in a cable must be grounded to their shield at each end. Verify by visual inspection and by resistance measurements that all installation requirements are met for connections, isolation, and continuity.

(1) Axial Transient Suppressors. Verify that coaxial, twin-axial, and tri-axial cables entering a facility at a bulkhead have shields properly grounded and that each axial cable is connected to a properly grounded feed through axial cable transient suppressor that meets equipment and non-degrading signal requirements. The shields of these transmission lines shall be terminated on a grounded bulkhead plate or on a grounding bar as they enter the building. Earth ground connection shall be made with a No. 2/0 AWG or larger copper wire. The connector plate or bar shall be tinned copper. All electrical paths to and from the transient suppressor shall be as short as possible and large enough to handle the surge current. Make sure separate electrical paths are provided when both high and low level transient suppressors are used. Low level transient suppressors are part of landline entry protection. Refer to figure 4-31.

(2) Non-Axial Landline Transient Suppressors. Verify that transient suppressor circuits for twisted pair and other non-axial landlines are provided in a separate junction box by the demarc box where landlines enter the facility. Transient suppressor bus bars A and B must be isolated from the junction box and from each other. Bus bar A must connect directly to the earth electrode system. Verify that suppressors are the proper size.

(3) Conduit. Verify that conduit is made of ferrous metal and has electrical continuity throughout its length. Conduits shall also be connected to earth ground at each end and, if the installed length is 300 feet or more, the conduit shall be connected to the earth ground every 100 feet.

(4) Armored Cable. Except for AC power cables, buried landlines which exceed 300 feet in length may use armored cable instead of conduit. Where it enters a facility, armored cable is bonded to the earth electrode system with a No.2 bare copper wire, or to the main ground plate, if necessary. Verify that any other armor grounding complies with FAA-STD-019.

(5) Guard Wires. Verify that cables with more than 3 feet not completely enclosed in ferrous conduit has a No.6 AWG solid copper guard wire buried a minimum of 10 inches above the cable. The guard wire shall be connected to earth ground at the ends and every 300 feet when the wire exceeds this length. A cable run spread that is greater than 3 feet wide requires two or more guard wires.

129. MULTIPOINT GROUND SYSTEM.

a. Ground Plate. Verify each ground plate is of proper size and construction and is mounted properly. Inspect all connections to the ground plate and measure each with a 4-terminal milliohm meter. Each junction resistance shall measure 1 milliohm or less. Any connections that do not meet this standard shall be redone and shall be measured again to certify compliance with the specification.

b. Electrical Paths. Verify that at least two low impedance electrical paths exist from the multipoint ground system to the earth electrode system. Verify that the multipoint ground system is isolated from the single point ground system until it reaches the main ground plate. Measure the multipoint ground path resistance to ground with a 4-terminal milliohm meter to verify that it is 5.0 milliohms or less. Verify that all multipoint ground system cables are coded green with an orange tracer and are insulated from other ground systems.

c. Building Grounding. Facility building structural steel elements shall be grounded to the earth electrode grounding system.

(1) Steel Buildings. Verify that joints in a steel framed building are adequately bonded. Measure joints with a 4-terminal milliohm meter. Junction resistance shall be 1 milliohm or less. The resistance of bolted joints can be reduced as follows. The resistance of the bolted joints can be reduced by cleaning with solvent, tightening the bolt to the proper torque, applying sealant, and re-measure its resistance. If the resistance is still greater than 1 milliohm, add 1 or more conductive jumpers across the joint until the junction resistance measures 1 milliohm or less. All steel building elements shall be grounded to the earth electrode system via conductors separate from the main ground plate conductor.

(2) Non-Metallic Buildings. Verify that all metallic elements of a non-metallic building are grounded to the earth electrode system directly or through the multipoint grounding system. Junction resistance shall measure 1 milliohm or less using a 4-terminal milliohm meter. Repair faulty junctions to meet requirements.

130. SINGLE POINT GROUND SYSTEM.

a. Ground Plate. Verify that all single point ground plates are isolated, are the proper size and construction and are mounted properly. Disconnect the main single point ground cable from the main ground plate to measure the isolation resistance between the plate and the cable. Isolation resistance must measure at least 10 megohms per FAA-STD-019. If the resistance is lower, the single point ground system isolation has been compromised and must be restored. Disconnect each single point ground branch to measure its isolation and to locate and repair isolation violations. Measure junction resistance of each reconnected single point ground with a

4-terminal milliohm meter to verify resistance of 1 milliohm or less for each remade connection.

b. Cables. Verify that all cables used in the single point ground system are the correct size, are insulated from contact with other grounds, and are coded green with yellow tracer. Replace cables as necessary to meet the specification.

c. Bus Bars. Verify that single point bus bars are of proper size and material are mounted in and isolated from equipment cabinets and junction boxes. Measure with a 4-terminal milliohm meter to insure that the resistance across each connection to a bus bar is 1 milliohm or less. Verify that all cables connected to these bus bars are properly sized and marked.

131. RESERVED.

132. RESERVED.

133. RESERVED.

134. RESERVED.

135. RESERVED.

CHAPTER 5. POWER DISTRIBUTION SYSTEM

SECTION 1. GENERAL

136. GENERAL POWER SYSTEMS.

Many RCF sites require both AC and direct current (DC) power to operate equipment. Reconfiguration of both AC and DC load centers may be necessary when installing new A/G communications equipment at an RCF. A DC power distribution system which provides +24 volts direct current (VDC) may be required at an RCF to support the associated equipment. The DC power distribution system is required to have redundant battery chargers/eliminators with appropriate interface circuitry that permits switching from one power source to another without interruption of service. AC and DC power system primary power source, capacity and characteristics are listed in Table 5-1, General AC Load Center Power/System Characteristics.

TABLE 5-1. GENERAL AC LOAD CENTER POWER/SYSTEM CHARACTERISTICS

SINGLE PHASE 240 VAC rms INPUT FEEDER REQUIREMENTS

SYSTEM TYPE	AC INPUT CURRENT	FEEDER SIZE	CIRCUIT BREAKER
3 channel	24 amps	10 AWG	30 amps
6 channel	45 amps	4 AWG	60 amps
12 channel	76 amps	1 AWG	100 amps

THREE PHASE 208 VAC rms INPUT FEEDER REQUIREMENTS

SYSTEM TYPE	AC INPUT CURRENT	FEEDER SIZE	CIRCUIT BREAKER
3 channel	15 amps	12 AWG	15 amps
6 channel	30 amps	10 AWG	30 amps
12 channel	50 amps	6 AWG	50 amps

AC POWER INPUT REQUIREMENTS FOR DC POWER SYSTEM

SYSTEM TYPE	BATTERY CHARGER	CABINET FANS	TOTAL POWER	TOTAL V/A
3 channel	2376 W	180 W	2556 W	2840
6 channel	4644 W	180 W	4825 W	5360
12 channel	7776 W	360 W	8136 W	9040

SECTION 2. AC POWER

137. GENERAL.

Commercial AC power to the site provides power to operate AC powered equipment as well as providing power for the battery chargers/eliminators required for operation of DC powered systems. Commercial AC power is either single phase 240 VAC or three phase 208 VAC.

138. AC POWER DISTRIBUTION.

AC power distribution shall be supplied from the main service disconnect panel via a master circuit breaker switch to the AC panelboard where the circuit breakers are mounted. These circuit breakers support the RCF equipment circuits and battery chargers. A diagram of a typical AC power system is shown in Figure 5-1, Simplified AC Power Distribution System. As a general policy, AC panelboard circuit breakers shall be subdivided. Equipment shall be separated on the same phase into circuit breaker groups identified by the following groups:

a. Primary or main RCF equipment (transmitters, receivers, multicouplers, radio control equipment and battery chargers).

b. Secondary or standby RCF equipment (transmitters, receivers, multicouplers and remote control equipment).

c. Commercial AC power source for utility items (lights, heating/cooling equipment and convenience outlets).

139. GROUNDING REQUIREMENTS.

The RCF AC power ground system shall provide electrical system safety grounding in accordance with the NEC.

a. **AC Ground Conductor.** The AC ground conductor takes a separate path to the earth electrode system via the grounding conductor. The AC power ground shall be connected to the barrier grounding bus of the main service panel. The ground conductor shall be terminated on the equipment rack, utilizing approved fittings. The equipment AC power grounding conductor shall be copper with green insulation and installed in the same raceway as the branch AC circuit conductors feeding the equipment. Each branch circuit shall have its own equipment grounding conductor. The equipment ground conductor shall be sized in accordance with Table 250-66 in NEC 70, Article 250.

b. **System Components.** Several system components are necessary in order to meet the standards for AC power grounding systems. These systems

may need to be upgraded when additional equipment is added to existing sites.

FIGURE 5-1. SIMPLIFIED AC POWER DISTRIBUTION SYSTEM

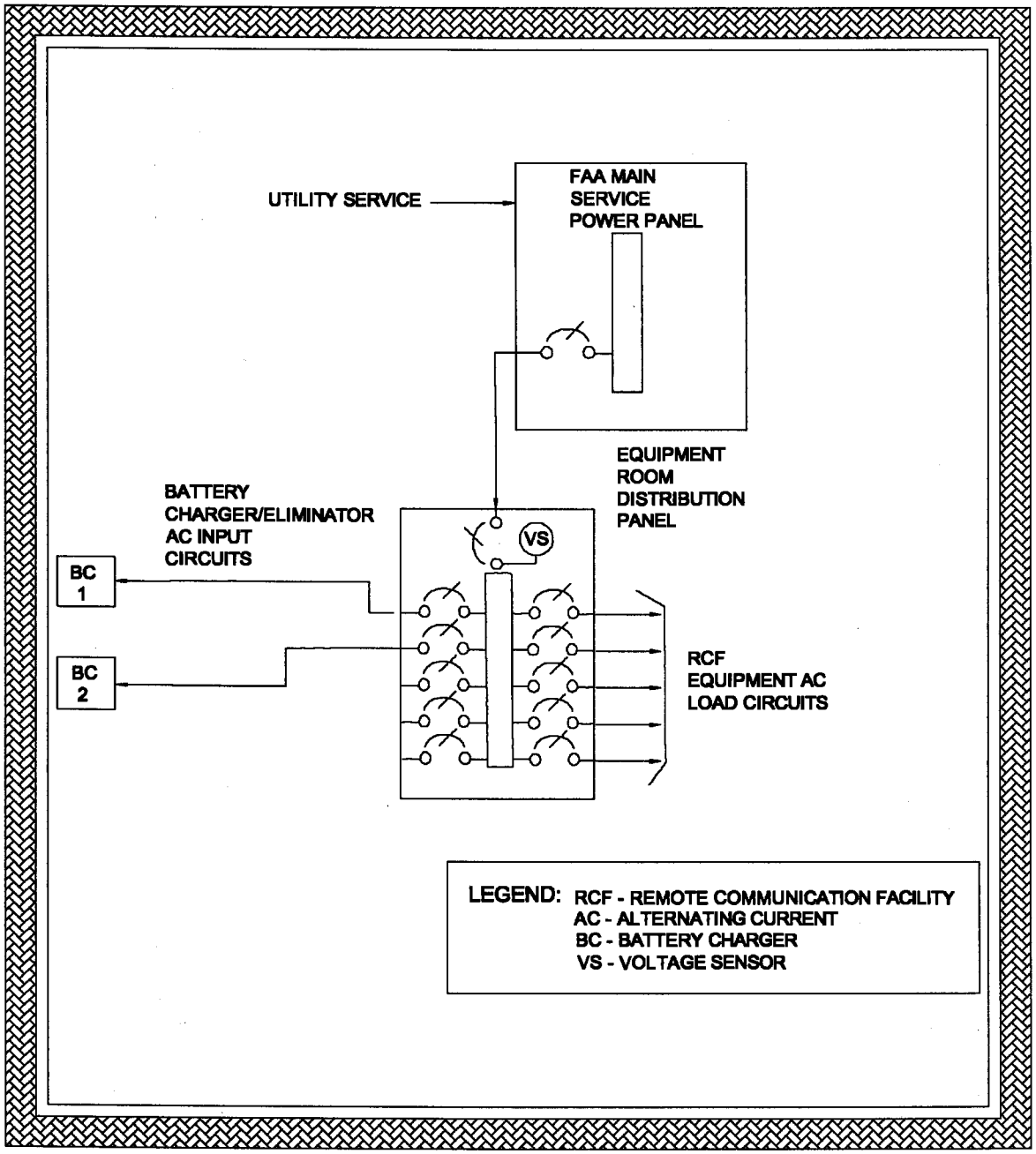

(1) AC Power Wiring Ground. The RCF equipment and rack AC power grounding conductor shall be installed in the same conduits, raceways, cable trays, etc., as the AC power branch conductors. If a power cord is used, the green conductor shall be integral with the branch conductors of the cord. Where a power cord terminates on a grounding type attachment plug, the equipment grounding conductor of the cord shall terminate on a fixed ground contact of the plug. For equipment supplied with AC power through a connector, the connector shall contain a grounding pin terminating the equipment grounding conductor to the connector pin. Do not rely on, or substitute, conduits or cable shields as the equipment grounding conductor even though they are electrically continuous and firmly bonded to the equipment case. All AC outlets shall be provided with a proper Underwriters Laboratory (UL) approved grounding receptacle.

(2) Main Service Transformer Ground. This is the grounding conductor between the main service transformer secondary center tap and the earth electrode system. Local power company approval shall be obtained before work is done on this system. Close coordination with the power company should be established before probing near active AC power cables.

(3) Transformer Grounding Conductor. At some host facilities, added power requirements may cause a need to increase the size of the grounding conductors between the main AC distribution transformer and the main AC service disconnect panel. Refer to the illustration in Chapter 4, Figure 4-1, Typical Facility Grounding System. Locate and uncover the grounding conductor between the main service transformer pad and the earth electrode system. Inspect the conductor for condition and proper size. The size of this grounding conductor between the transformer pad and the earth electrode system is based on the size of the largest service entrance power conductor. This conductor shall be a No.2 AWG or larger copper conductor. The following chart will assist in selecting the proper conductor size.

NOTE: Do not use powered equipment. Use only hand tools!

Size of Largest Service-Entrance Conductor or Equal Area for Grounding	Size of Grounding Conductor
3/0 AWG through 250 MCM	2
350 MCM through 600 MCM	1/0
600 MCM through 1100 MCM	2/0
Over 1100 MCM	3/0

NOTE: To avoid injury and any possible equipment damage, TURN OFF the AC power at the transformer input prior to upgrading the main service transformer conductor to the earth electrode system. Coordinate all systems shutdowns with air-traffic personnel.

(4) Earth Electrode System Connection. The RCF AC power ground system requires a conductor between the main service disconnect panel and the earth electrode system. One end of the wire should be connected to the ground bus inside the main service disconnect panel. It should be connected to the neutral bus if a neutral bus is present. The size of this conductor to the earth electrode system shall be based on the size of the largest service entrance power conductor or as referenced in Table 250-66 of the NEC. The conductor may be a No.2 AWG or larger stranded copper conductor. A mechanical connection similar to the one shown in Figure 5-2, Main AC Service Ground Bolted Connection, shall be used to facilitate system ground testing. This is the only mechanical connection to the underground electrode system which allows this conductor to be disconnected during ground testing. The same conductor size used for the main service transformer ground shall be used for this conductor. All underground connections shall be exothermic welds.

140. AC PANELBOARD.

The AC panelboard may be either single phase or three phase depending on the facility. A drawing of each type is shown in Figure 5-3, Typical Reconfigured RCF Single Phase AC Power panelboard, and Figure 5-4, Typical Reconfigured RCF Three Phase AC Power panelboard. These panelboards may have to be reconfigured to support new communications equipment. The following steps are necessary to add breakers to support new equipment.

a. Remove Entrance Power. Commercial AC power is removed by opening the main breaker at the main power disconnect.

b. Remove Front Panel. Remove the AC front panelboard front panel.

c. Install Convenience Outlet Breakers. A dedicated 15 Amperes AC circuit breaker shall be used for each group of three convenience outlets installed in the RCF racks. A single convenience outlet shall be mounted in the base of each rack with the exception of racks containing only DC voltage powered equipment. These racks shall not have AC voltage outlets permanently installed.

NOTE: DO NOT INSTALL AC CONVENIENCE Outlets in DC voltage equipped racks except on a temporary basis.

d. Install Equipment Circuit Breakers. A dedicated 20 amperes AC circuit breaker shall be used for the main equipment and a second dedicated 20 Amperes circuit breaker shall be used for the standby equipment. Main and standby multicoupler and control equipment shall be configured the same way. Each equipment group shall have a SEPARATE dedicated circuit breaker group.

FIGURE 5-2. MAIN AC SERVICE GROUND BOLTED CONNECTION

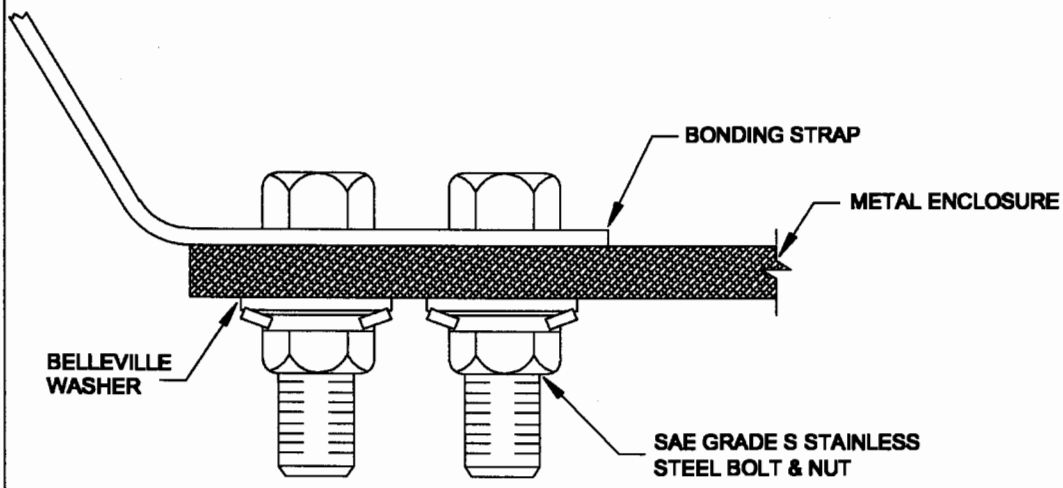

SOURCE:

SAE GRADE S STAINLESS STEEL BOLT & NUT

NOTES:

a. USE STUDDED SPLIT BOLT CONNECTOR, MINIMUM WIRE SIZE #4 AWG, BONDING LUG FOR ALL DISCONNECT SWITCHES & METAL ENCLOSURES

b. REFER TO FAA-STD-19 FOR BOLT TORQUE SPECIFICATIONS

FIGURE 5-3. TYPICAL RECONFIGURED RCF SINGLE PHASE AC POWER PANELBOARD

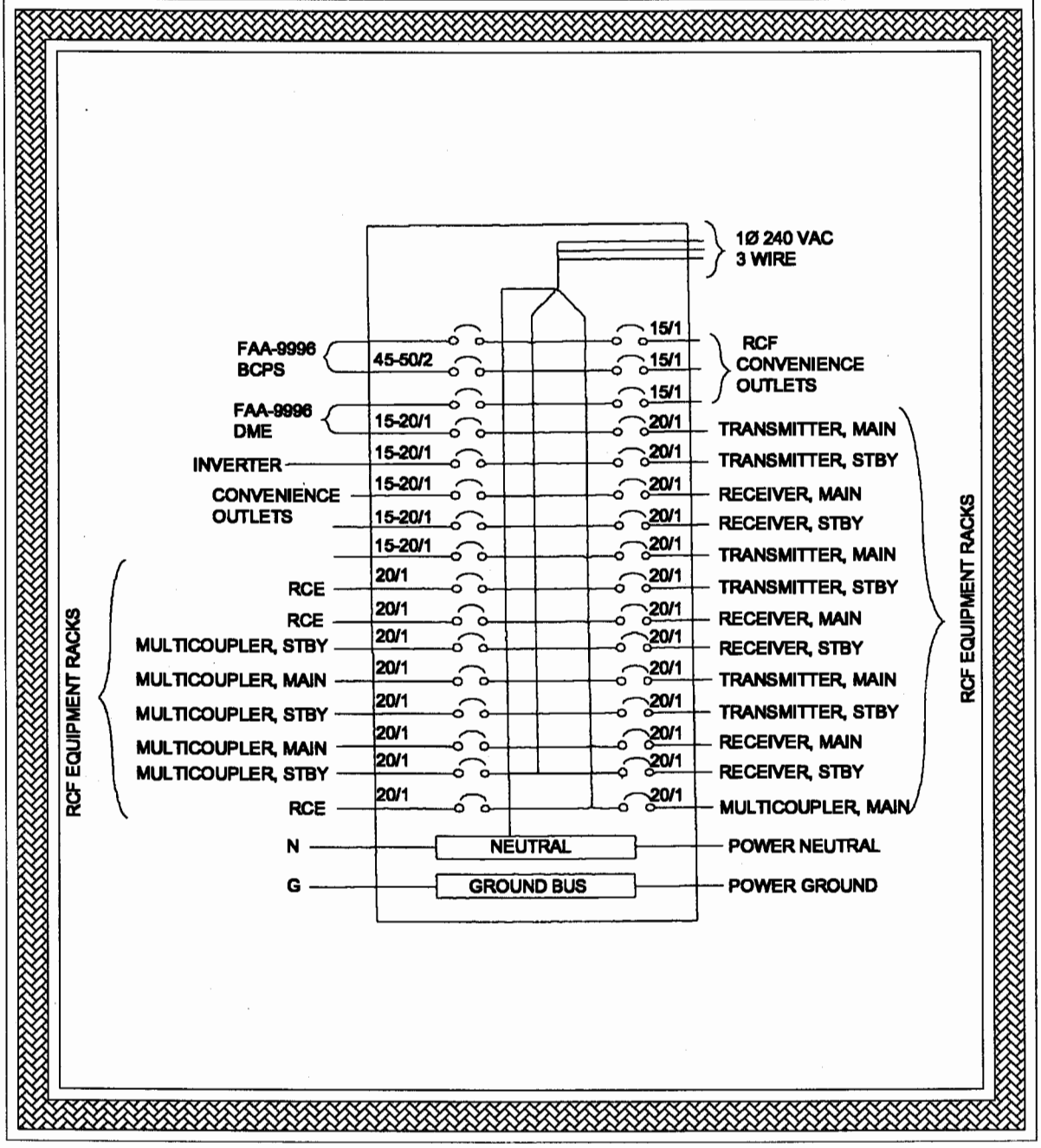

FIGURE 5-4. TYPICAL RECONFIGURED RCF THREE PHASE AC POWER PANELBOARD

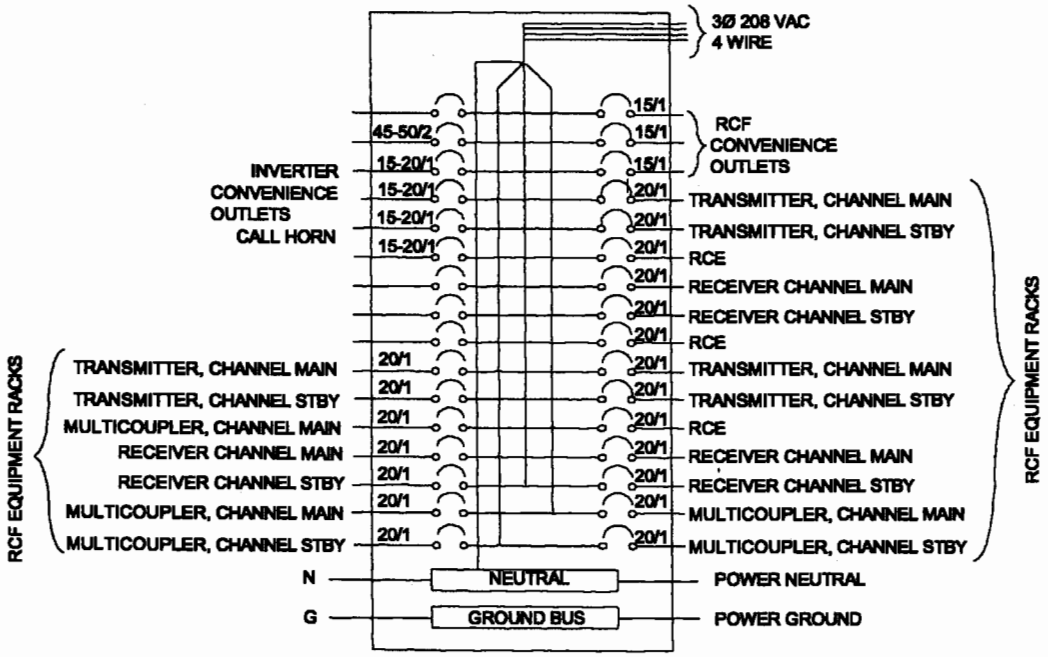

141. WIRING.

AC power wiring shall be done in accordance with FAA-C-1217, Electrical Work, Interior. AC wiring shall never be routed with DC wiring, control cables, or RF cabling.

142. RESERVED.

143. RESERVED.

144. RESERVED.

145. RESERVED.

SECTION 3. DC POWER SYSTEM

146. GENERAL.

The DC power distribution system consists of a DC power system and a backup battery system containing additional battery charger systems. A DC to AC power inverter may also be employed to provide backup power to the Telephone Company (TELCO) trunk termination equipment. A block diagram of typical power distribution system is shown in Figure 5-5, Typical RCF Power Distribution Diagram.

147. DC POWER DISTRIBUTION.

Control of DC power distribution shall be through the DC power system. The DC power rack contains the battery chargers, load distribution panels, battery disconnect panel, alarm and monitor panel and the AC input panel. A typical rack configuration is shown in Figure 5-6, Typical DC Power Rack. The assemblies that make up the DC power rack shall be configured to support 3-channel, 6-channel, or 12-channel RCF communications system applications.

a. Monitor Panel. The monitor panel monitors DC Bus system equipment functions, selected environmental building parameters, standby power source status. Alarm sensors shall provide serial digital signals to relay information on failures. Data is usually transmitted as an analog, four-wire communications circuit which does not cause interference to the voice signals. Microwave, UHF radio and fiber optic paths can also be used to transmit information to remote alarm monitoring equipment.

b. AC Interface. The AC input panel interfaces with the AC load center to provide power for the battery chargers and/or eliminators. A DC power distribution diagram for a battery charger is shown in Figure 5-7, Typical DC Load Distribution.

c. Battery Disconnect Panel. The manual battery disconnect panel allows discharging batteries to be disconnected from the load when system voltage drops below a pre-set minimum. An alarm in the form of a dry contact relay closure shall provide an indication that this has occurred. Battery systems per NEC 70 shall have a disconnect switch or breaker to remove a battery from the rest of the DC power system. A battery charger/eliminator alarm and monitor panel is shown in Figure 5-8, Battery Alarm and Monitor Panel.

FIGURE 5-5. TYPICAL RCF POWER DISTRIBUTION DIAGRAM

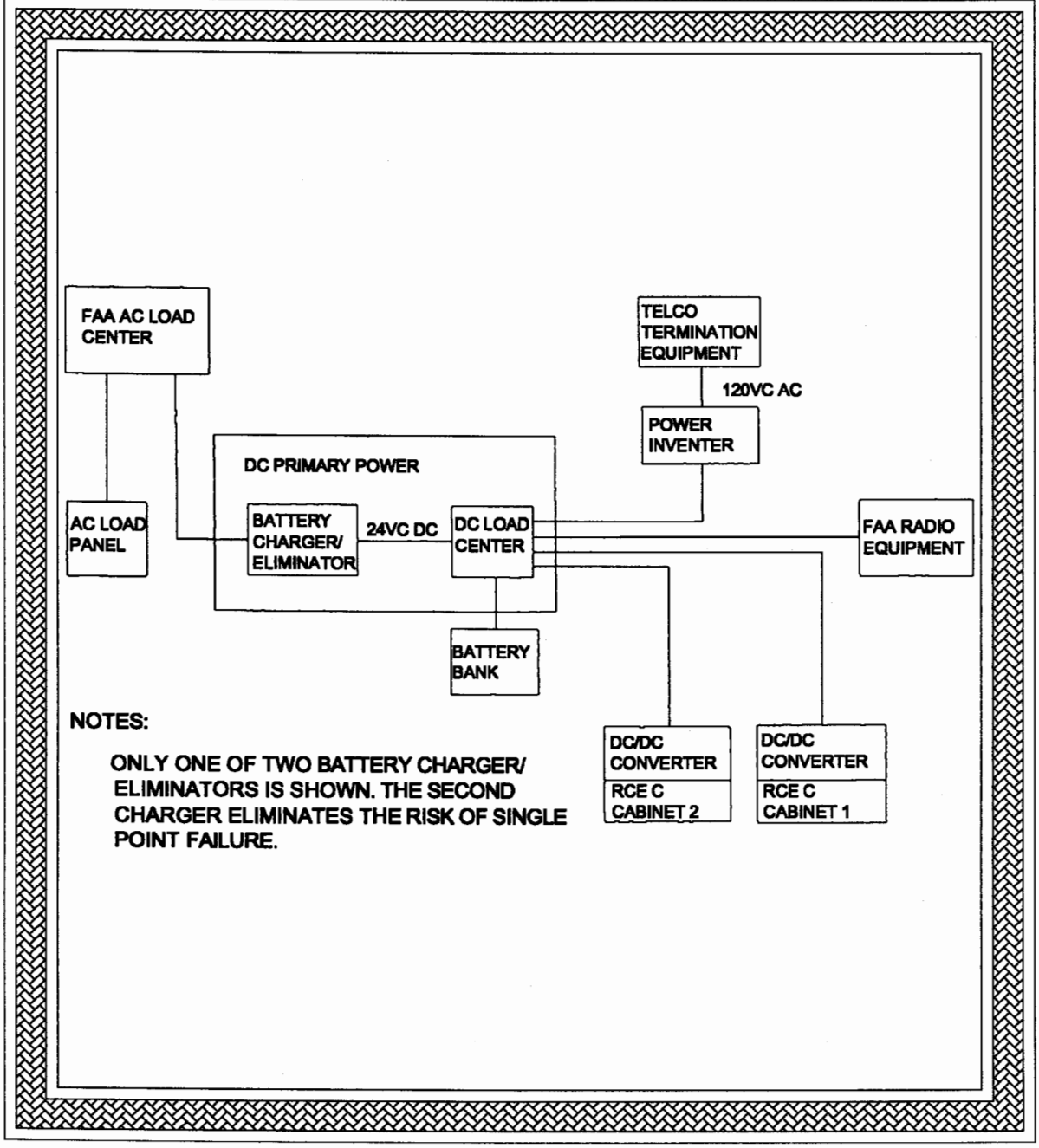

NOTES:

ONLY ONE OF TWO BATTERY CHARGER/ ELIMINATORS IS SHOWN. THE SECOND CHARGER ELIMINATES THE RISK OF SINGLE POINT FAILURE.

FIGURE 5-6. TYPICAL DC POWER RACK

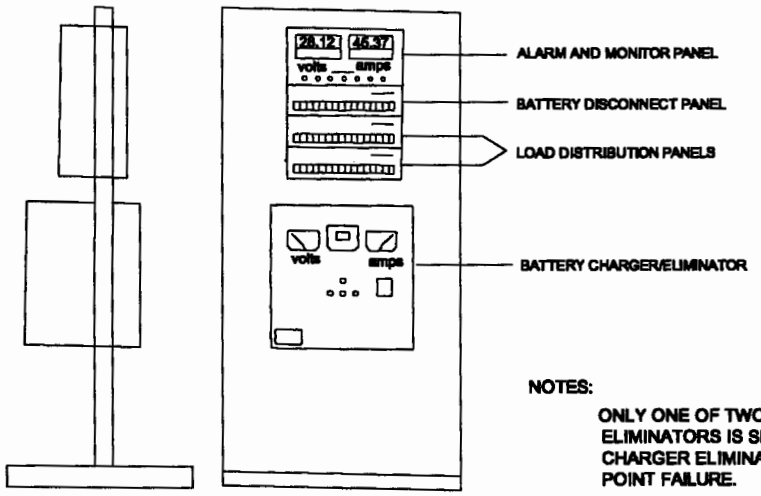

NOTES:

ONLY ONE OF TWO BATTERY CHARGER/ ELIMINATORS IS SHOWN. THE SECOND CHARGER ELIMINATES THE RISK OF SINGLE POINT FAILURE.

FIGURE 5-7. TYPICAL DC LOAD DISTRIBUTION

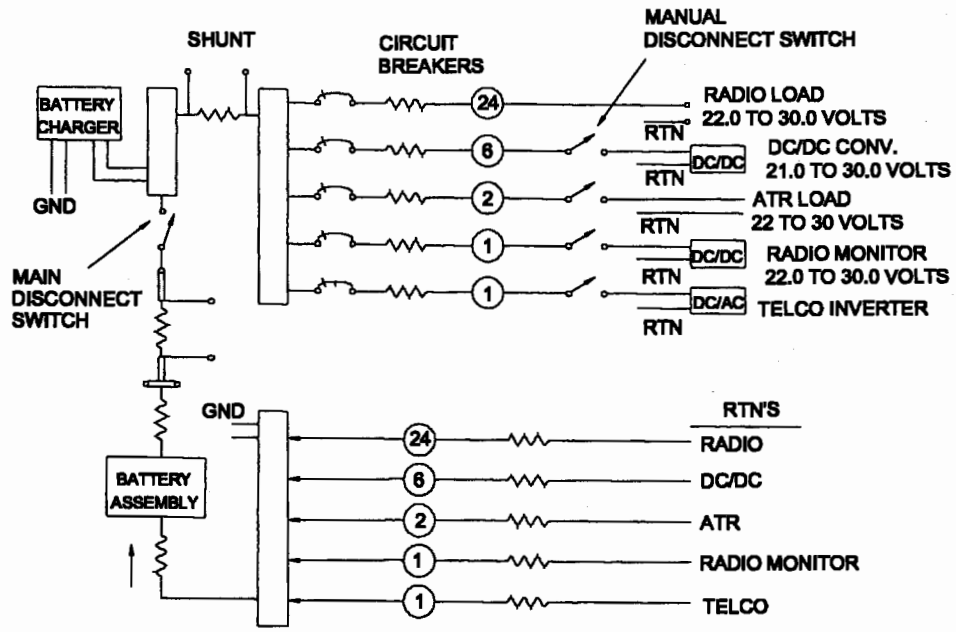

NOTES:

ONLY ONE OF TWO BATTERY CHARGER SYSTEMS IS SHOWN

FIGURE 5-8. TYPICAL BATTERY ALARM AND MONITOR PANEL

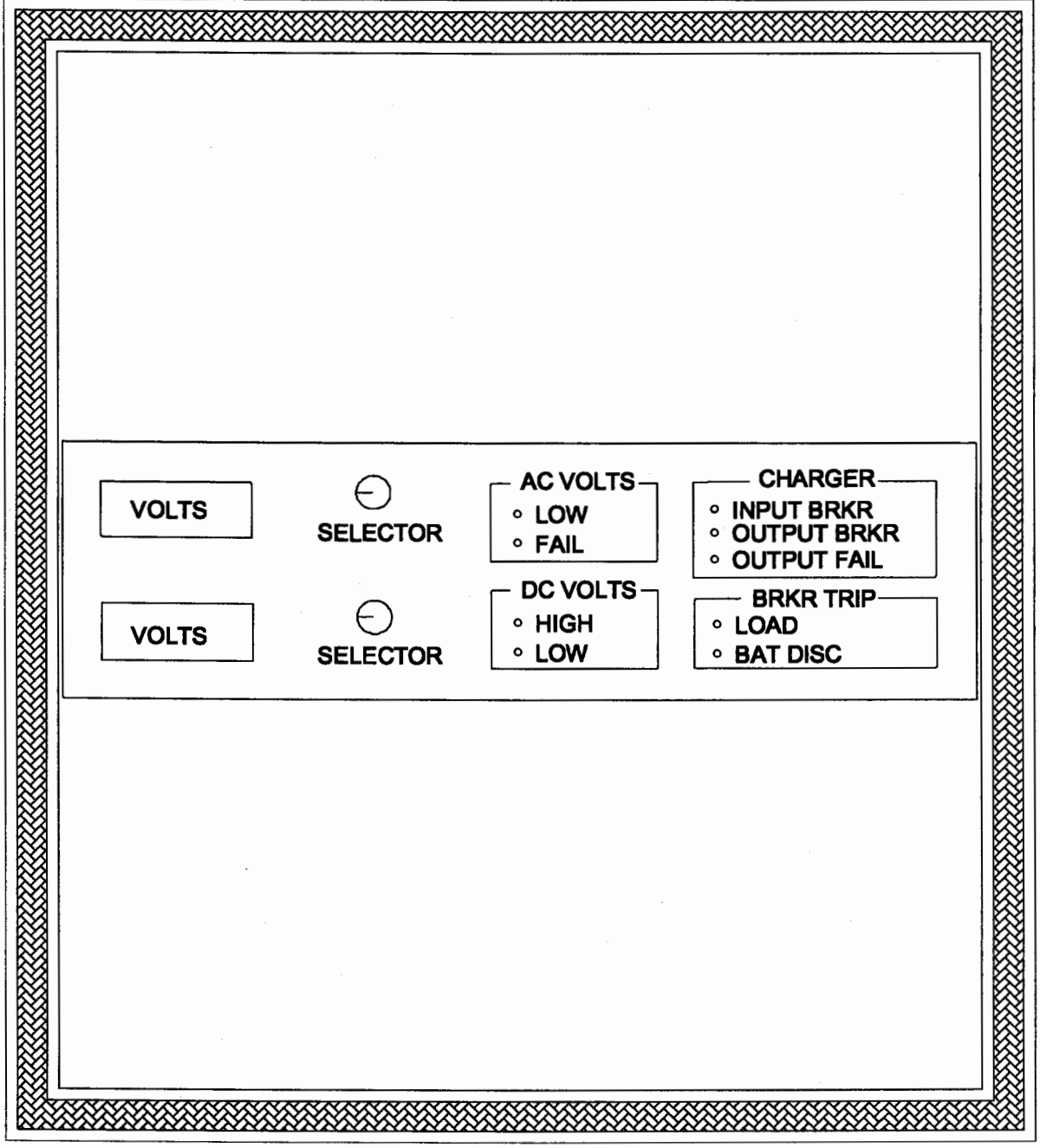

d. Distribution Panel. The load distribution panel shall provide a housing to mount and connect the circuit breakers. These breakers shall provide protection for radio equipment, DC to AC inverters, antenna transfer relays, and radio monitoring equipment. A dedicated circuit breaker shall be used for each piece of equipment.

e. Battery Charger. Battery chargers shall be mounted in the DC power rack. They are to correspond to expected load requirements for 3-channel, 6-channel, and 12-channel site applications. Each charger shall be capable of concurrently servicing the RCF peripheral, radios, float or recharge, and a DC to AC inverter. Batteries are float charged to the volts per cell level specified by the battery manufacturer.

f. Batteries. Batteries shall be used to provide a backup DC power source. Sealed (VRLA) type batteries that have a 10-year life expectancy shall be used. A minimum of 4 hours of battery backup operation is required at RCF installations. Other sites may require more backup operating time and shall be installed as required.

148. GROUNDING REQUIREMENTS.

The DC bus internal ground system is then connected to the earth electrode system (EES) with a 4/0 AWG conductor. The DC bus system frame is also connected to the multipoint ground via a separate conductor. The DC bus system and AC power are grounded at the power source, typically at the AC panelboard.

149. DC WIRING.

A feed and return wire shall be used for each piece of equipment. Color coding for the DC distribution wiring shall be red for positive voltage and black for negative. A No. 12 AWG or larger copper wire shall always be used and enclosed in ferrous conduit. The wires shall also be twisted together a minimum of eight turns per foot.

150. DC POWER-UP PROCEDURES.

The following power-up procedures shall be performed after the AC power wiring and the DC distribution wiring have been completed.

a. Charge Batteries. Close the battery safety switch. This permits the DC output of the batteries to charge the capacitors. If the initial surge current trips the safety switch, reset and close the switch. It will take one to two minutes for the batteries to charge the capacitors to 89 percent of the battery terminal float voltage. When the voltage reaches 85 percent, close the DC power supply output circuit breakers and reset the power supply in accordance with the instruction manual.

b. **Adjust Power Supply.** Close the power supply AC input circuit breakers. Adjust power supply voltages to meet system requirements. Procedures for this adjustment are found in the equipment instruction manual. Charge the battery system until the charging current stabilizes such that the current changes no more than 10% during 3 consecutive hourly reading. Adjust the power supply as specified by the battery manufacturer.

151. **RESERVED.**

152. **RESERVED.**

153. **RESERVED.**

154. **RESERVED.**

155. **RESERVED.**

CHAPTER 6. EQUIPMENT INSTALLATION

SECTION 1. SYSTEM DESCRIPTION

156. GENERAL.

This section describes the various system configurations and hardware requirements for the installation of A/G communications equipment at typical RCFS.

a. Requirements. Installation requirements concerning rack configurations for transmitters, transmitter combiners, receivers, receiver multicouplers, transmitter/receiver (T/R) configurations, control interface units, wire ducts, cable trays, terminal wiring, and antenna systems are also addressed. Proper equipment installation at an RCF will improve radio communications system performance.

b. System Configuration Description. The following system configuration generally describes installation of ARTCC RCF A/G equipment. New design changes are incorporated that may differ substantially from previous designs. Operational applications for Airport Traffic Control Tower (ATCT) and Automated Flight Service Center (AFSS) remote equipment may differ from the examples. A block diagram of typical RCF A/G equipment is shown in Figure 6-1, RCF Electronic Equipment Block Diagram.

(1) Equipment Racks. A typical RCF may have at least two rows of equipment racks. The standard and most common equipment rack is 83 inches in height with a depth of 22 inches (newer equipment racks may be 25 inches deep) and has the Electronic Industry Association (EIA) 19 inch equipment chassis panel width. This width results in an outside dimension of 21.75 inches for the rack. Other width and depth dimensions may be used to satisfy site requirements. The configuration of equipment in the rack shall allow for frequency expansion and prevention of interference between and away from existing facility equipment.

(2) Transmitters. An RCF site may be equipped with a complement of single frequency RF transmitter units to support the number of operational channels required by the facility. Transmitters shall be assigned in single channel equipment groups. Each channel contains up to four transmitter units. Two Transmitter (TX) units are provided for the assigned VHF (one main and one standby equipment). Two TX units may be provided for the assigned UHF, one main and one standby unit. Both VHF and UHF main transmitters may at the same time contain the same audio channel when active. The standby transmitter unit is remotely switched-in as a backup for a malfunctioning unit on a one-for-one basis.

FIGURE 6-1. RCF ELECTRONIC EQUIPMENT BLOCK DIAGRAM

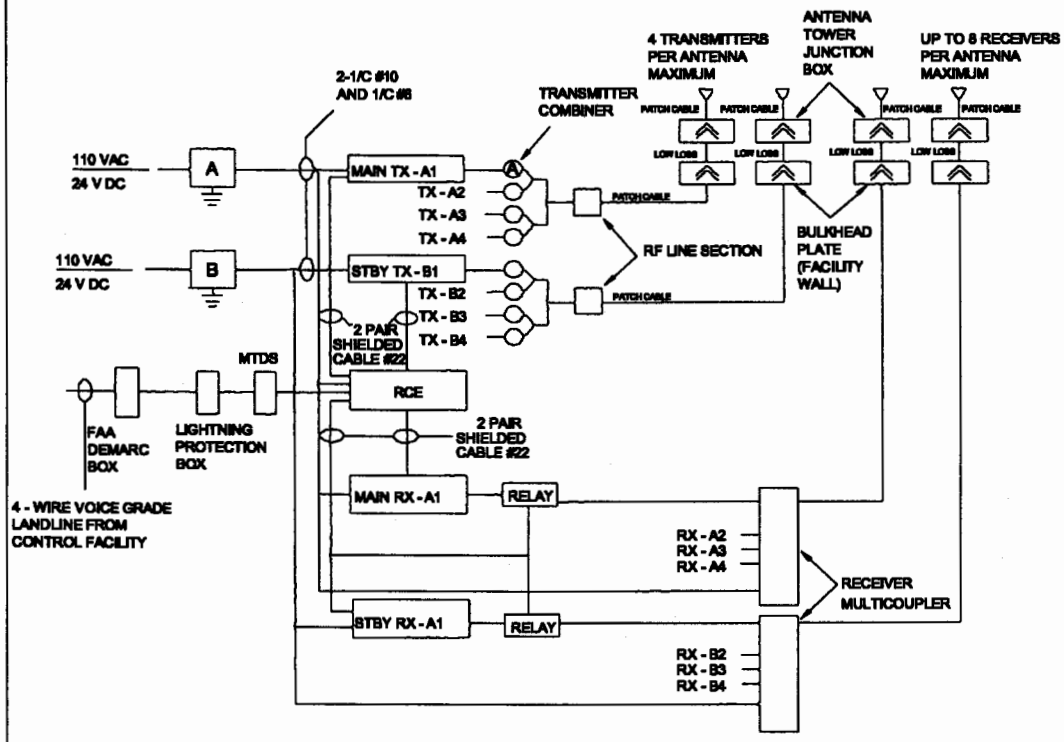

NOTES:

BLOCKS ARE TYPICAL FOR A SINGLE VHF/UHF CHANNEL EQUIPMENT

(3) Receivers. An RCF site may be equipped with a complement of single frequency RF receiver units to support the number of operational channels required by the facility. Receivers shall be assigned in single channel equipment groups. Each channel is supported with up to four receiver units. Two radios are supplied for the assigned VHF frequency (one main and one standby unit) and two radios may be supplied for the assigned UHF frequency (one main and one standby unit). Both VHF and UHF main receiver equipment audio may be active at the same time. Standby receiver equipment is remotely switched-in on a one-for-one basis.

(4) Transmitter Combiners. In accordance with current FAA philosophy, no more than four transmitters shall be connected to a combiner system assigned to one antenna. The effect of combiner insertion loss on system performance shall be considered when using these devices. Main and standby transmitters SHALL NOT be connected to the same combiner, and the combiner system shall have an insertion loss of approximately 2.5 dB or less.

(5) Receiver Multicouplers. In accordance with current FAA philosophy, up to eight receivers shall be connected to a multicoupler assigned to one antenna. The multicoupler does not have an adjustable gain, but may have its insertion loss of no more than 0 dB.

(6) Increased Power Capability. Linear power amplifiers (LPA) or MDR with top hats are used to increase A/G radio range to meet air traffic coverage requirements. Strict attention to site management guidelines is required when using these devices so that intermodulation and interference to other equipment does not occur. The use of low loss RF cable and high gain antennas shall be considered as alternate methods of satisfying A/G radio communications coverage requirements.

(7) Radio Control Equipment. The radio control equipment (RCE) equipment provides a method to control several radio functions from a distant location for each channel of equipment. RCE is a voice over data modem.

(8) RF Line Section Panel. The RF line section panel is considered as a standard part of each site antenna system. Therefore, each transmit antenna system should have an RF line section within its system. RF line sections provide a method to measure transmitter output power and provide a method to establish the antenna Voltage standing wave ratio (VSWR). This method indicates the capability of the connected antenna system to radiate most of its input energy. Receiving antenna systems may also be tested for their VSWR condition using an RF line section.

(9) RF Cable Transfer Relay Panel. Main or standby connection of a transmitter or receiver to an antenna may be provided by the use of an RF cable transfer relay panel. This panel enables the remote switchover of transmitters, receivers and LPA amplifiers. Sites that contain transmitter

combiners will not require a transfer relay panel to do the transmitter transfer function.

(10) Landline Termination. Incoming telephone lines shall terminate in a Federal Aviation Administration (FAA) demarc box or FAA/TELCO mini-demarc system provided with an attached surge arrester lightning protection box. All landlines shall pass through this enclosure before connection to RCE equipment.

157. EQUIPMENT RACK CONFIGURATION.

This paragraph describes the typical rack configurations located within the host facility. Refer to Figures 6-2 through Figure 6-6, which illustrate typical equipment rack configurations.

a. Single Channel RF Equipment Rack. A single channel RF rack normally contains paired VHF/UHF main and standby transmitters as well as VHF/UHF main and standby receivers. Normally, frequency A is VHF and frequency B is UHF. This rack is shown as the TX/RX Layout in Figure 6-2a, Typical single Channel Equipment Racks.

(1) Transmitter Equipment Rack. A transmitter rack contains one to eight transmitters for main and standby operation. An RF line section or coaxial transfer relay panel shall be located at the top of the rack or as required. This configuration is shown as the TX Only Layout in Figure 6-3a, Typical Two Channel Equipment Racks, and is formed in a two rack combination for two channels. Multiple combinations of this rack pair shall be used to achieve the channel quantity required.

(2) Transmitter Combiner Equipment Rack. Transmitter combiner racks may be open or closed type. A typical rack accommodates up to eight VHF RF cavities. The transmitter combiner rack shall be located adjacent to, or near, the transmitter rack to minimize the RF cable length between the transmitter output and the combiner input. In some configurations, a cavity filter is required to further suppress interference. This cavity filter is similar in appearance to a combiner cavity. The UHF combiner configuration uses two cavities per transmitter port since isolators are too restrictive in bandwidth to cover potential changes. The combiner rack configurations for VHF and UHF are illustrated in Figure 6-4, Typical Transmitter Combiner Equipment Racks.

FIGURE 6-2a. TYPICAL SINGLE CHANNEL EQUIPMENT RACKS

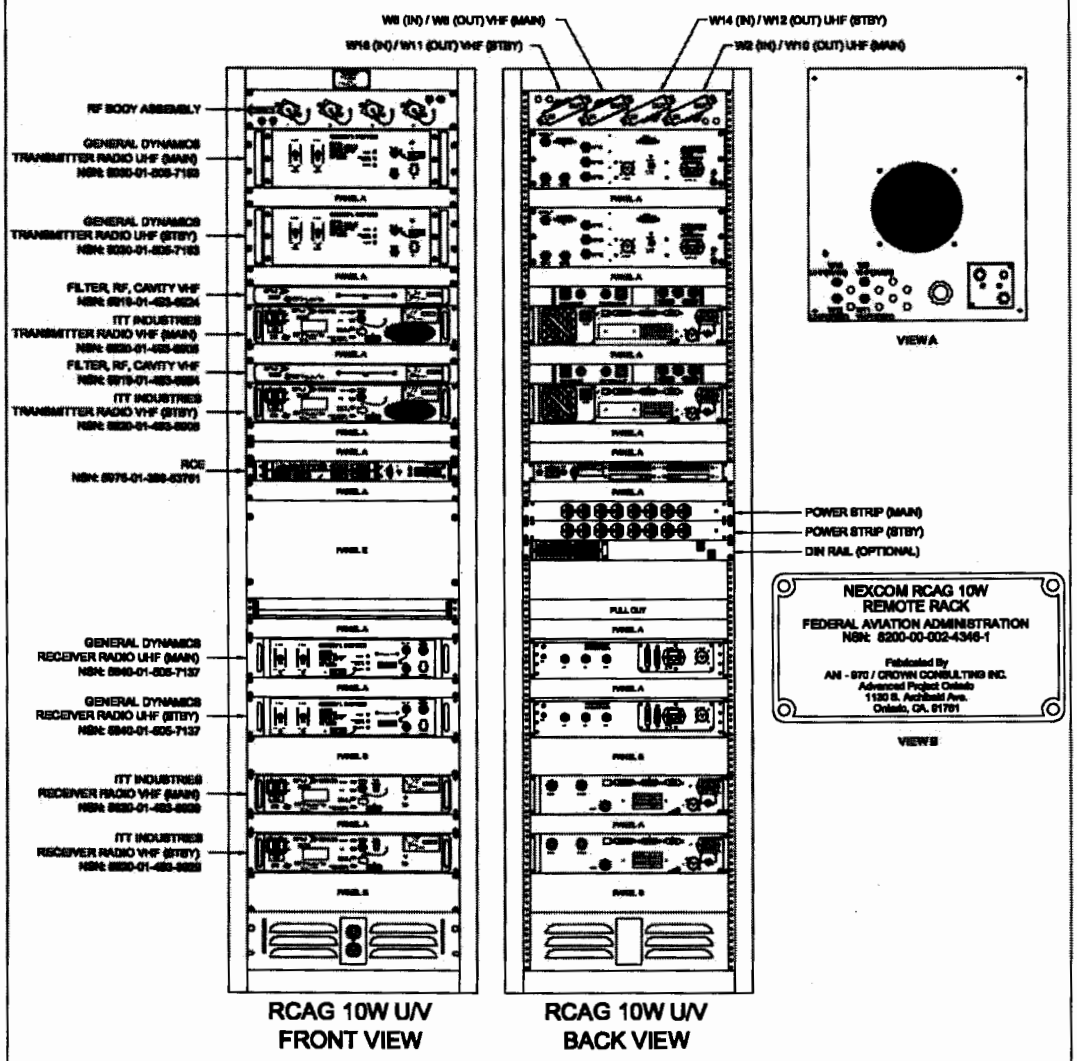

FIGURE 6-2b. TYPICAL SINGLE CHANNEL EQUIPMENT RACKS

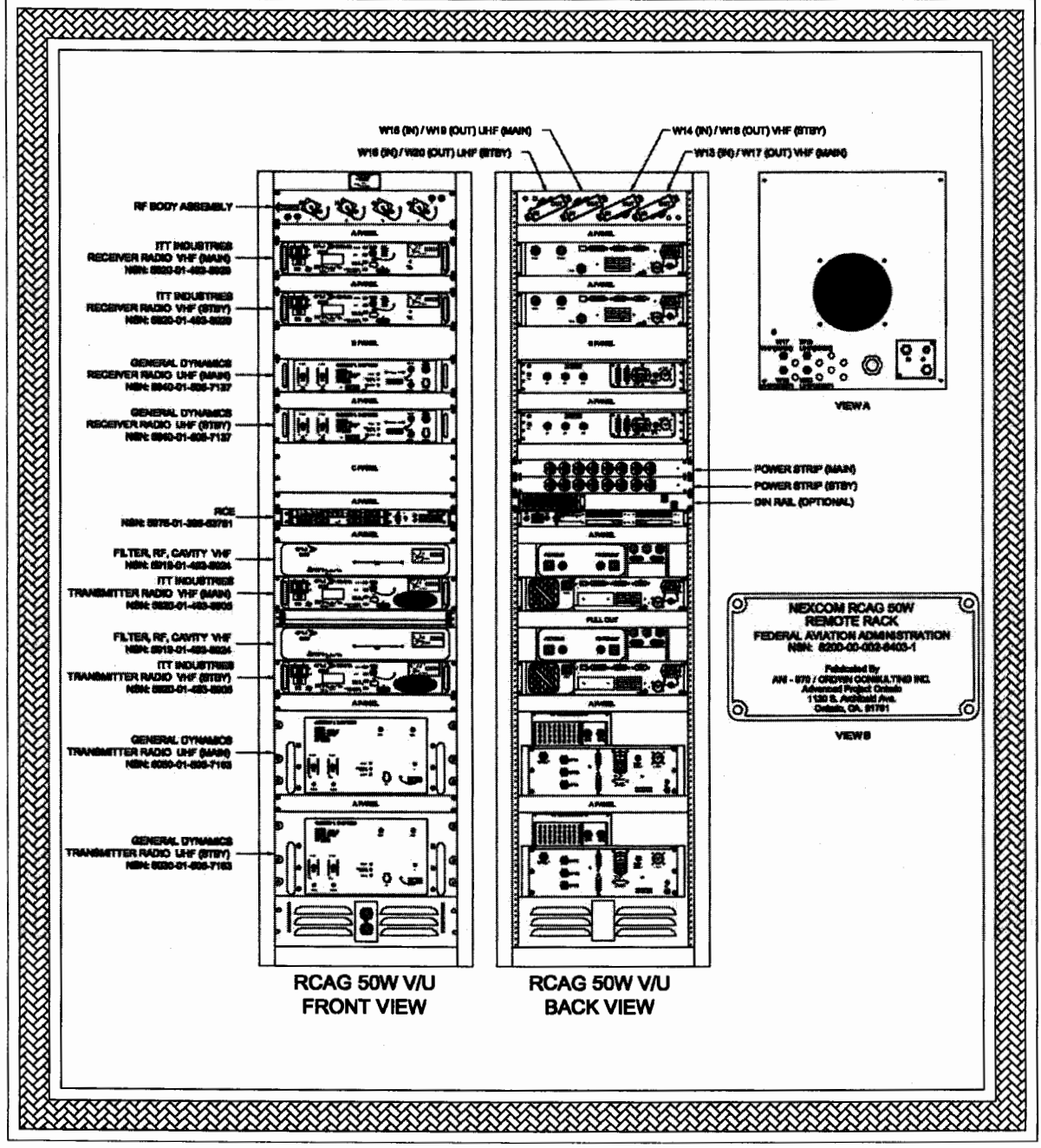

FIGURE 6-3a. TYPICAL TWO CHANNEL EQUIPMENT RACKS

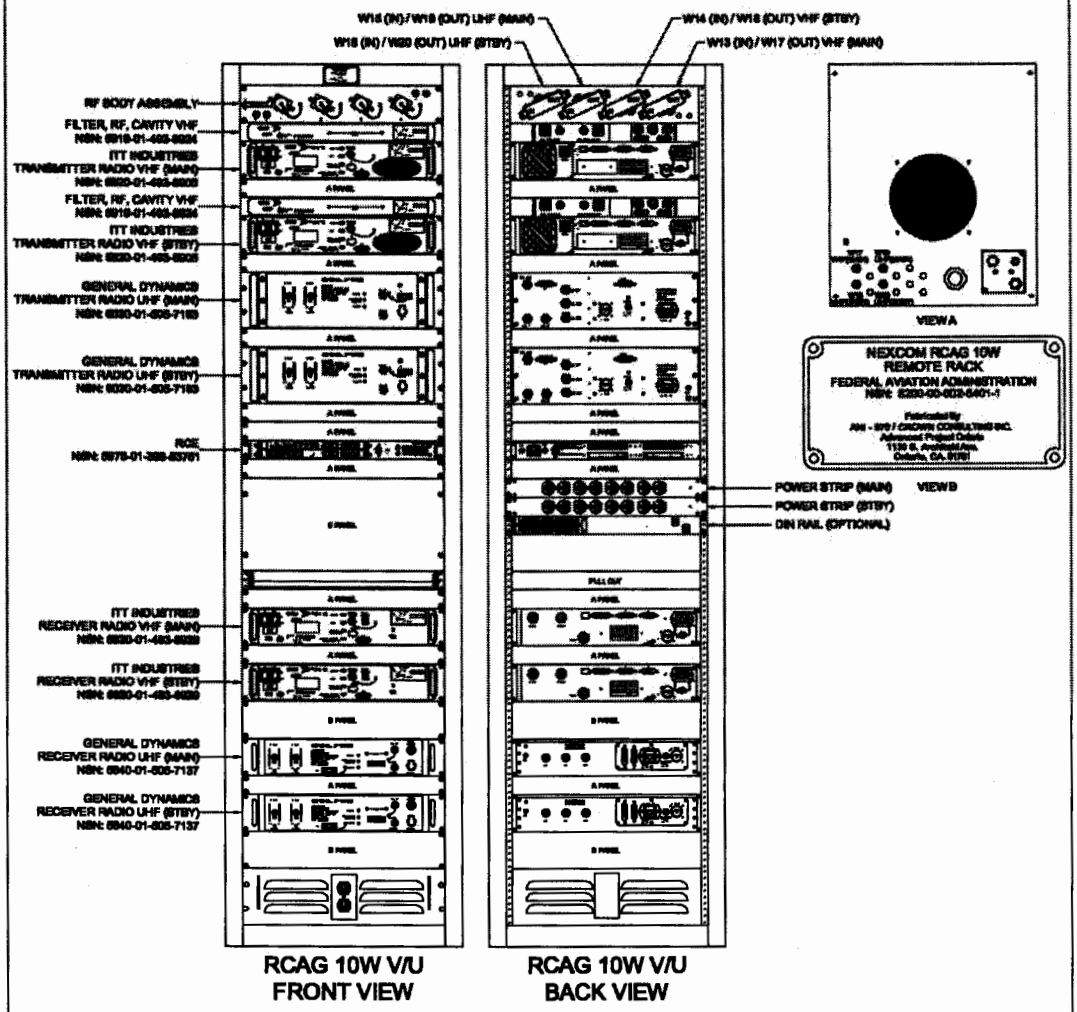

FIGURE 6-3b. TYPICAL TWO CHANNEL EQUIPMENT RACKS

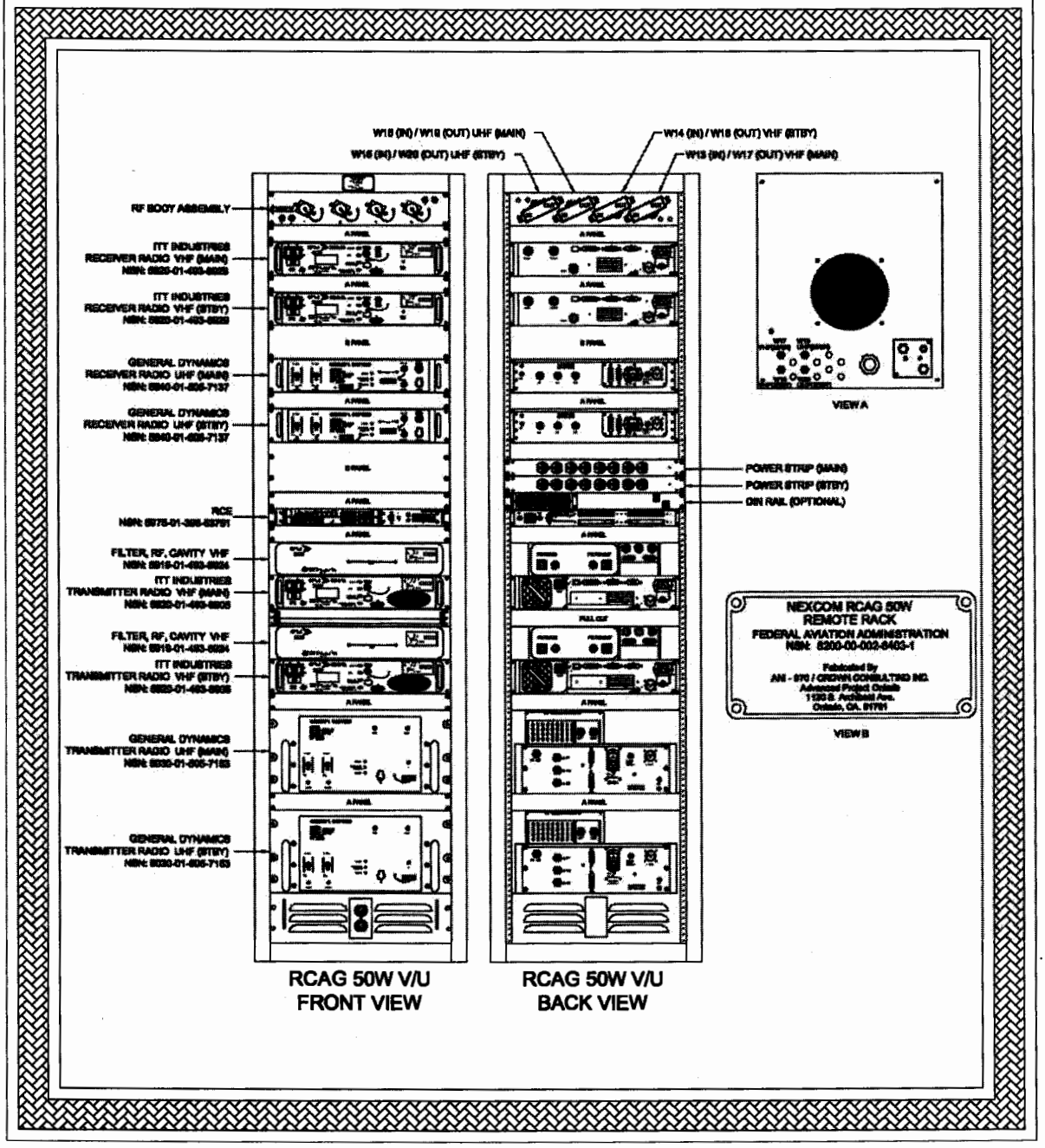

FIGURE 6-4. TYPICAL TRANSMITTER COMBINER EQUIPMENT RACKS

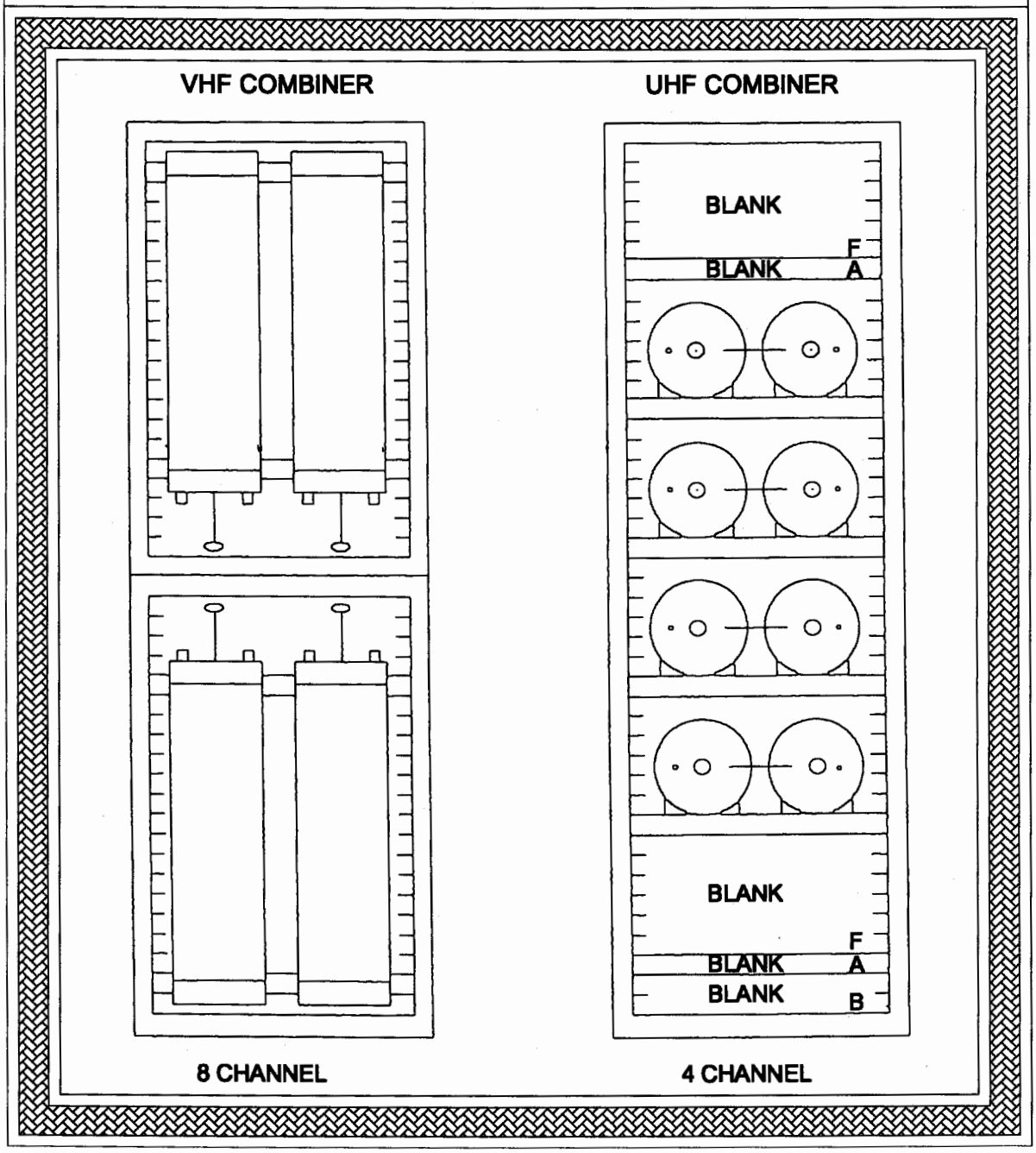

(3) **50 Watt UHF/VHF Equipment Rack.** The 50 watt UHF and VHF equipment rack typically contains two CM-350 UHF 50 watt transmitters and two 30 watt MDR CAVU-2100 VHF transmitters (includes High Power Top Hat). This rack configuration is shown as the RCAG 50 Watt Rack in Figure 6-2b. This equipment configuration is used in those RCF locations in which additional coverage range is needed to support site communications requirements.

b. Receiver Equipment Rack. A receiver equipment rack may contain one to eight receivers for main and standby operation. In multichannel configurations the receiver rack may be separate from the transmitter rack. This receiver equipment rack configuration is shown as the RX Only Layout in figure 6-3.

c. Multicoupler Equipment Rack. A receiver multicoupler equipment rack may contain one to eight multicouplers per rack for both main and standby operation. In most installations, locate the multicoupler in the top section of the receiver rack. In larger systems an alternate method is used. The multicoupler is mounted in a separate rack positioned as close as possible to the receiver rack it supports. This method is used when space in the receiver rack does not allow for multicoupler installation. The length of RF cable between the receivers and their respective multicouplers shall be kept as short as possible. Multicoupler units are required to support the two channels as shown in the configuration, RX Only Layout, shown in figure 6-3. An eight channel multicoupler configuration is shown in Figure 6-5, Receiver Multicoupler Equipment Rack.

d. Radio Control Equipment Rack. The RCE equipment may be mounted in a separate individual rack or integrated into an RF equipment rack. There are several physical forms for RCE equipment dictated mainly by the number of channels supported. In RCAG sites with one channel to control, a single radio control equipment is used such as that shown in Figure 6-6, RCAG 10 Watts Rack. As shown in Figures 6-2 and 6-3, the RCE equipment is installed in the same rack. Equipment may be one or more A panels in height separated by an A panel. The RCE equipment is classified as low frequency equipment requiring a separate single point ground connection. There are other configurations used in ARTCCs, RTRs and AFSSs.

158. WIREWAYS.

Metallic square duct, conduit and a cable tray system shall be installed in the RCF equipment room. Support is provided for cable and wire runs between the equipment racks, the AC panelboard, the grounding system, and the antenna bulkhead panel. Figures 6-7, Typical RCF Cable Tray Installation, Top view and Figure 6-8, Typical RCF Metallic Duct, Cable Tray and Conduit Installation, illustrate a typical installation. Figure 6-8 includes the various elements and elevations of the cable support system. Specific site requirements will determine the actual configuration. All duct and cable tray sections shall be bonded bare metal to bare metal by strap or copper

wire. Conduit sections are bonded by the conduit locking nuts. All metal cable supports shall be connected to the site multipoint grounding system.

FIGURE 6-5. RECEIVER MULTICOUPLER EQUIPMENT RACK

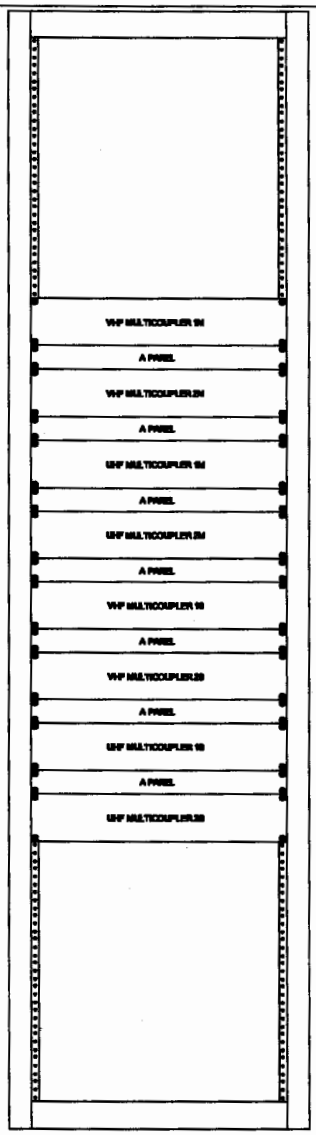

UHF-VHF MULTICOUPLER
8 CHANNEL

FIGURE 6-6. RADIO CONTROL EQUIPMENT RACK

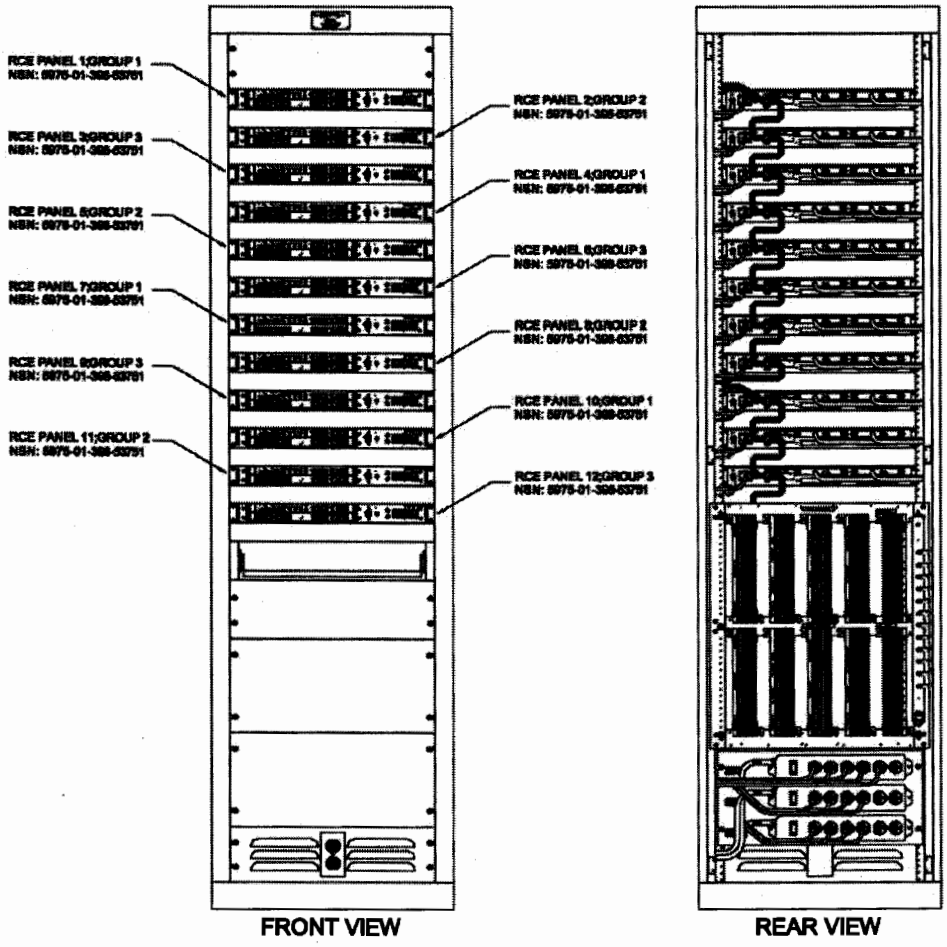

FIGURE 6-7. TYPICAL RCF CABLE TRAY INSTALLATION, TOP VIEW

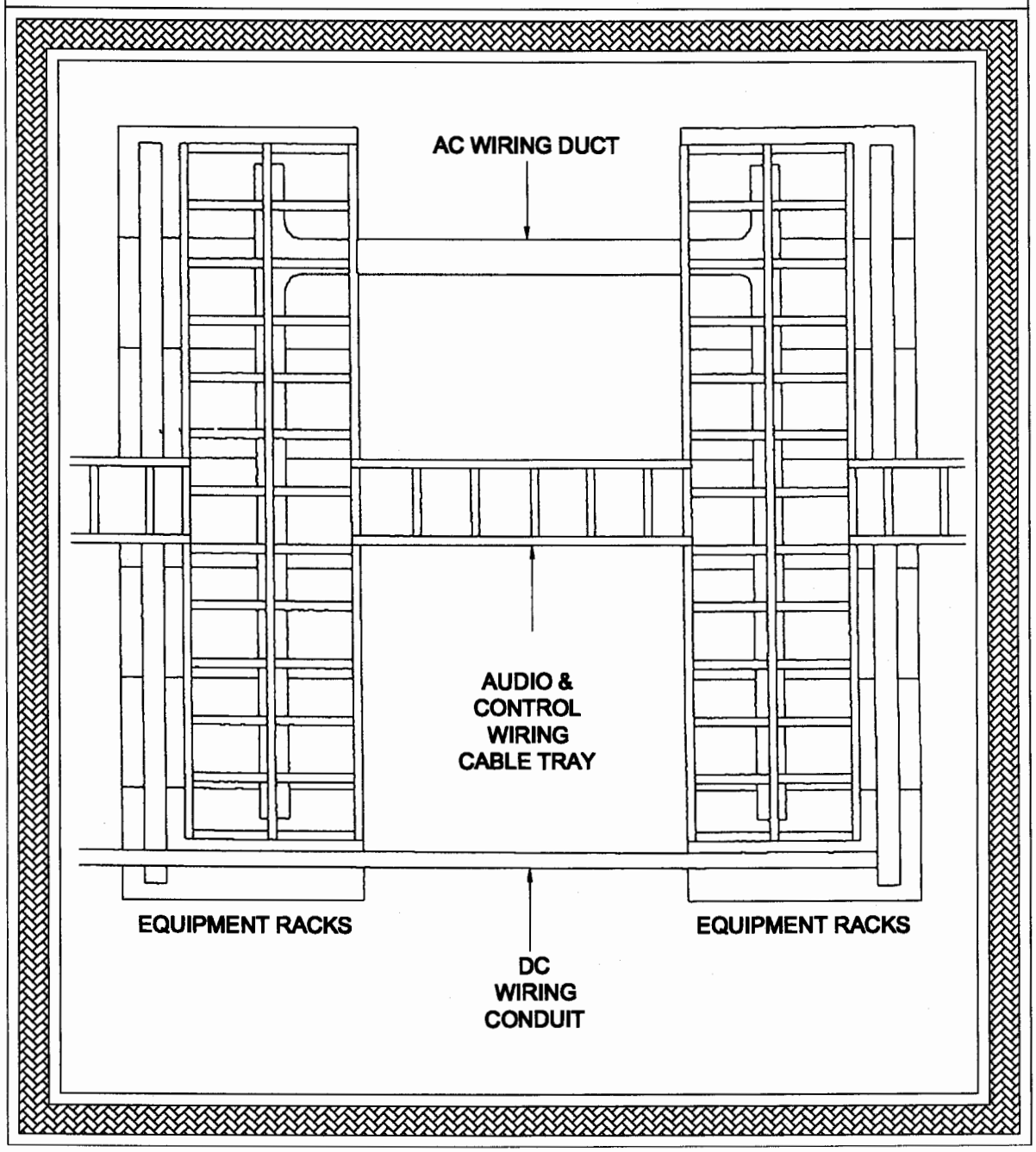

FIGURE 6-8. TYPICAL DUCT, CABLE TRAY AND CONDUIT INSTALLATION

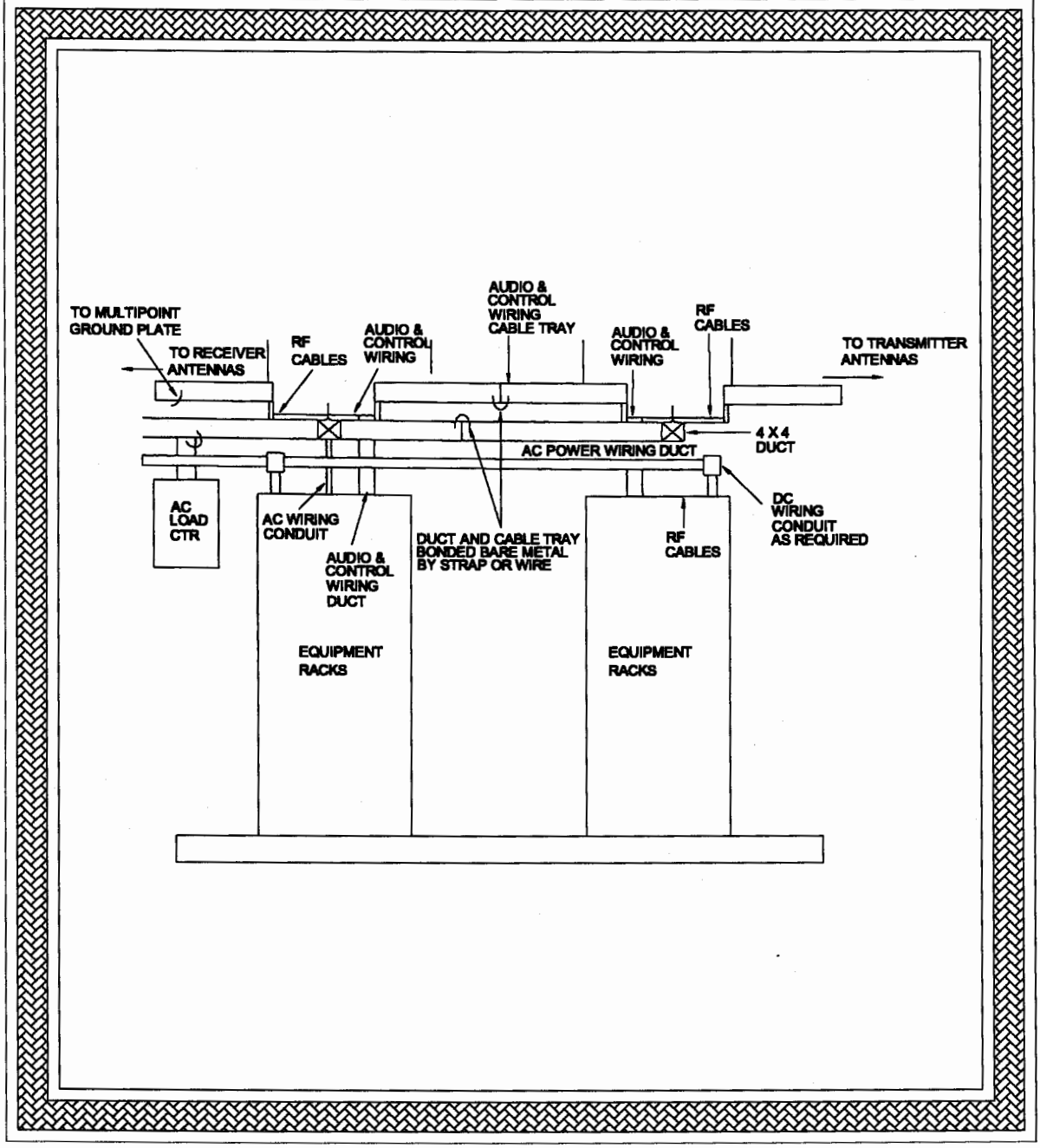

a. Cable Tray. Cable trays shall be installed to provide mechanical support and protection for cable runs. Cable trays provided with metallic barriers for separating and shielding cables shall be used. Cabling installed in the trays are DC power cabling, transmitter output cabling, receiver input cabling, audio cabling and control cabling. Transmitter and DC power cabling shall be separated from receiver and audio/control cabling.

b. Metallic Duct. Metallic ducts or conduit shall be installed above the equipment racks for the AC power cabling. The type of ducts used shall be determined after consideration of the EMI and EMC shielding requirements.

c. Conduit. Conduit shall be selected to satisfy the environmental conditions and EMI/EMC protection requirements. Refer to FAA-C-1217, Electrical Work, Interior, for guidance. The recommended conduit, ferrous electrical metallic tubing (EMT), shall be installed to provide mechanical support and protection to the wire runs. PVC shall only be used underground or encased in concrete. The size of the conduit used shall be selected to permit easy cable installation. High pulling tensions and chafing may cause damage to the cable during installation when conduit bends are too sharp or if the conduit is sized too small for the cable size being installed. A pulling compound shall be used to reduce friction and avoid potential cable damage when pulling cable through conduit. The lubricant selected shall be compatible with the cable jacket.

(1) EMT Conduit. EMT thin wall metallic conduit shall only be used for interior installations where rust and oxidization are minimal. The most common application for EMT conduit is protection of AC power wiring for facility lighting, heating/cooling systems, convenience outlets and AC wiring to equipment racks as required. EMT conduit is also recommended for audio cable routing.

(2) PVC Conduit. Both heavy wall semi-rigid and flexible PVC conduits may be used for exterior installations. PVC conduit may be installed underground or encased in concrete to provide mechanical support and protection to cable runs when EMI and EMC protection is not required.

(3) High Density Polyethylene (HDPE). A new multi configuration conduit is having a heavy but flexible, continuous wall is being utilized providing water proofing capability since joints have a range of splicing choices, from heat to mechanical coupling. HDPE with its high performance characteristics, crush strength, bending radius, and superior pulling ability, gives buried cables much-needed security and protection against road utility construction, random dig ups, and rodent damage. Cable and fiber optics installed in HDPE conduit experience fewer failures than direct buried cables, and the cost of labor to replace a cable in conduit is far less than the cost of replacing direct buried cables.

(4) Anti-Pest HDPE. Pest Duct is manufactured by Tamaqua and distributed by companies such as DRAKA as an enhanced HDPE type duct. It is

used most often in areas inhabited by gophers, rodents and cable eating species.

159. RESERVED.

160. RESERVED.

161. RESERVED.

162. RESERVED.

SECTION 2. INSTALLATION OF EQUIPMENT

163. EQUIPMENT INSTALLATION.

The typical RCF A/G communications equipment is installed in the racks as follows:

a. Transmitter Equipment. Install the specified number of transmitters in the equipment rack with the correct hardware. The installation positioning is illustrated in Figures 6-2 and 6-3. The transmitters shall be separated from each other by one 'A' size (1.75") blank panel. The transmitters shall be installed using chassis slides. Mount the RF line section and/or main/standby (M/S) coaxial transfer relay panel at the top of the equipment rack.

b. Transmitter combiner Equipment. No more than four transmitters shall be supported by a single antenna and combiner system. Each transmitter shall have one cavity (VHF) or two cavities (UHF) dedicated to it in the combiner assembly. The cavities (four) shall be tuned for minimum power loss on their assigned frequency and maximum isolation of adjacent frequencies. This is normally accomplished by the manufacturer prior to delivery. The output of individual cavities is connected with a cable harness to other cavity/transmitter combinations to a common point. This common point is then connected to a transmission line which feeds a single antenna. Cables used for the interconnection of cavities are cut to specific lengths determined by the frequencies of the transmitters to which they are connected. Paragraph 169c, Cavity Interconnect and Harness Cables, contains additional information on the cable harness.

(1) Relay Configurations. Several sites containing only a few channels will not require combiner equipment. Sites with three or fewer channels can use coaxial transfer relay panels to allow transfer from main transmitter equipment to standby transmitter equipment, the addition of a power amplifier, or operation of transmitters and receiver in the transceiver configuration. Subparagraph 170, RF Cabling for CM-200 T/R Configuration contains additional information on cable configurations.

(2) VHF and UHF Transmitter Combiner Racks. A transmitter combiner rack may contain either VHF or UHF cavities. The VHF transmitter combiner cavity rack may accommodate eight cavities (eight channels) and operate between 118-137 MHz. The UHF transmitter combiner cavity rack may contain up to eight cavities (four channels) and operate between 225-400 MHz. The combiner may be broken into two ranges of 225-300 MHz and 300-400 MHz. Transmitter combiner configurations are shown in Figure 6-4.

(3) Combiner Installation. The combiner cavities normally are installed in the rack supplied with the cavities. The racks can be open frame type or closed frame as illustrated in Figure 6-4. The cavities shall be mounted in accordance with the manufacturer's instructions included with

the rack. Hardware for mounting the cavities is supplied with the cavities. The rack shall be grounded to the multipoint ground plate with two appropriately sized cables or unequal lengths must vary by at least 30%.

c. Receiver Equipment. Install the required number of receivers in the equipment rack with appropriate hardware. The installation positioning is shown in Figures 6-2 and 6-3. Receivers shall be separated from each other by one `A' size blank panel. The receivers may be installed using chassis slides. Install main/standby coaxial transfer relay panels as required.

d. Receiver Multicoupler Equipment. The receiver multicouplers shall accommodate the main and standby VHF requirements of the 118-137 MHz frequency range and the UHF requirements of the 225-400 MHz frequency range. Up to eight receivers shall be supported by a single antenna and multicoupler system. Multicouplers shall be separated from each other by one `A' size blank panel. The multicoupler shall be installed in the rack by attaching the multicoupler chassis slides to the rack. All unused receiver ports shall be terminated with a 50-ohm load. Each chassis shall be grounded to the rack multipoint ground bus bar.

(1) VHF/UHF Receiver Multicoupler Racks. A stand-alone receiver multicoupler rack shall contain both main and standby VHF and UHF multicouplers similar to the combination shown in Figure 6-5. Other practical combinations with receiver equipment shall be determined by site configuration requirements. Main and standby VHF and UHF receivers shall not be connected to the same multicoupler. Referring to Figure 6-3, four separate multicouplers would be required to support this one rack.

(2) Multicoupler Installation. The receiver multicouplers may be installed in the rack as shown in Figure 6-5. The multicoupler equipment illustrated is for an eight channel application. The individual receiver multicoupler shall be connected to the multipoint equipment ground system. A jumper wire is connected to the equipment ground stud and to the rack equipment ground bus bar. An UL approved AC power cord shall provide a protection ground connection. Mounting hardware shall be used to secure the front panel of the multicoupler to the equipment rack.

164. RESERVED.

165. RESERVED.

SECTION 3. EQUIPMENT RACK WIRING AND CABLE INSTALLATION

166. RACK TERMINAL BLOCK.

Each equipment rack is equipped with three Siemon Company S66M terminal blocks or equivalent to permit equipment installation without disturbing existing wiring. All signal and control wiring to and from equipment installed in an individual rack shall pass through the terminal blocks en route to or from other equipment units either internal or external to that rack.

167. AUDIO AND CONTROL CABLES.

Audio and control cables are pre-wired inside the equipment rack. The cables are pre-wired to minimize the adverse impact of EMI on audio information or control signal information being routed over these cables. Audio, control and RF cabling are represented in a two wire diagrams in Figures 6-9a and 6-9b. If metal to metal option is implemented both metal surfaces shall be free of paint or any other non conductive finishes. Typical rack equipment grounding is depicted in Figure 6-11.

a. Landline Termination. Landlines shall enter the RCF equipment room via an FAA demarcation box or FAA/TELCO demarc system equipped with appropriate surge protection devices. Shielded pair No.22 or 24 AWG voice grade landlines shall be installed via a metallic duct or conduit per FAA-STD-019 from the landline lightning protection circuit to the RCE equipment rack terminal block. Landline cabling entering and leaving the demarcation box shall be terminated in a manner similar to that shown in (Figure 6-10a and Fig6-10b), Typical Landline Cable Termination. Refer to paragraph 123, Landline Protection, for additional illustrations.

(1) Terminating Audio and Control Cables. For short intra-building runs, only the shield or drain wire at the receiving end is grounded. By grounding only one end, the shield or drain wire will have the same potential as the device chassis, minimizing crosstalk caused by capacitive coupling. The result will be balanced twisted pairs that exhibit common mode rejection characteristics.

(2) 200 Foot Rule. The 200 foot rule requires that each drain wire or ground conductor be grounded, as described in the previous section, when its length is less than 200 feet. Ground both ends when the length exceeds 200 feet. When overall shielded, multipaired or twisted pair cable is used, a single grain or foil/mesh sheath can be used for grounding purposes. The formula is used to calculate copper wire resistivity.

$$R = \frac{pL}{A}$$

Cable with #22 AWG has resistivity equal to 1.62 ohms/100ft; cable with #24 AWG has resistivity equal to 2.52 ohms/100ft. By using the 200 foot rule

with a reference of 1 volt, current and voltage can be minimized sufficiently to limit EMF from developing between twisted pairs.

(3) **Very Long Landlines**. When landlines run up to several thousand feet and both ends are grounded for lightning protection, the risk of having continuous current flowing due to ground potential differences increases. This ground potential difference results in inductive crosstalk. Allowing the remote end of the cable shield to remain ungrounded will minimize inductive crosstalk. A common technique for restoring longitudinal balance to long spans of landline cables is to install a 600 ohm center tapped transformer across the receiving end of the twisted pari and ground the center tap. Leave the secondary of the transformer open. The coupled (unwanted) signals are grounded out and the differential audio passes right through.

(4) **Landline Distribution Configuration.** Landline telco cables shall enter the communications equipment racks and terminate at an input terminal block (TELCO type 66 Block or equal). The terminal block is part of the pullout shelf which is integrated in the equipment rack. These telco cables (two trunk lines) shall be shielded until they arrive at the RCE equipment chassis. The output cabling for the RCE shall also terminate at the input terminal block before continuing to the radio transmitter and receiver equipment. As an option, an audio patch panel may be placed in this audio path. Special care must be taken to preserve the shield continuity. Figure 6-12, Typical Audio/Control Cable configuration, illustrates the application of this audio cabling method. Larger channel capacities will require more cabling and equipment rack but the same general plan shall be maintained.

FIGURE 6-9a. TYPICAL EQUIPMENT RACK WIRING FOR RCAG UV (T1)

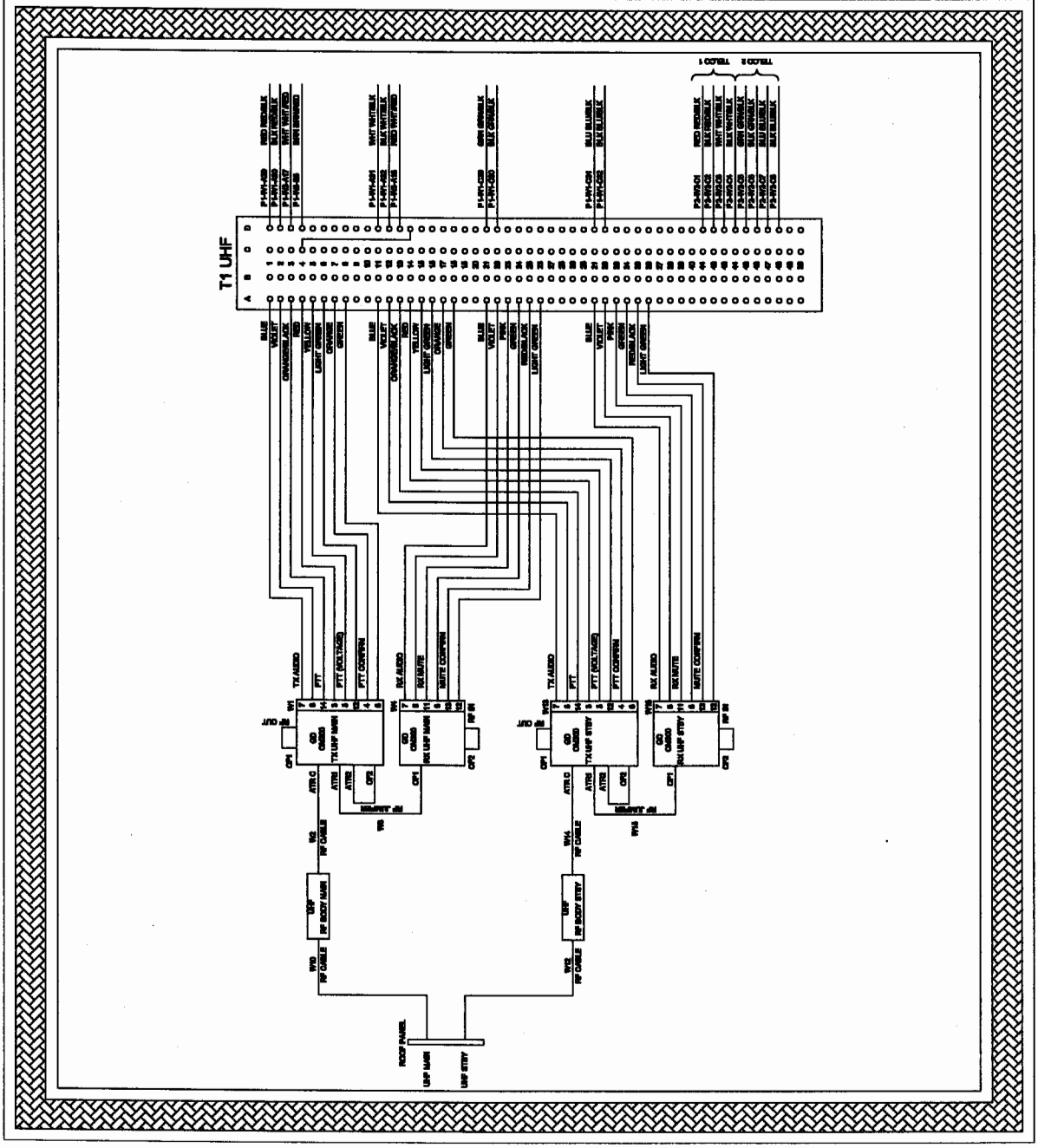

FIGURE 6-9b. TYPICAL EQUIPMENT RACK WIRING FOR RCAG UV (T2)

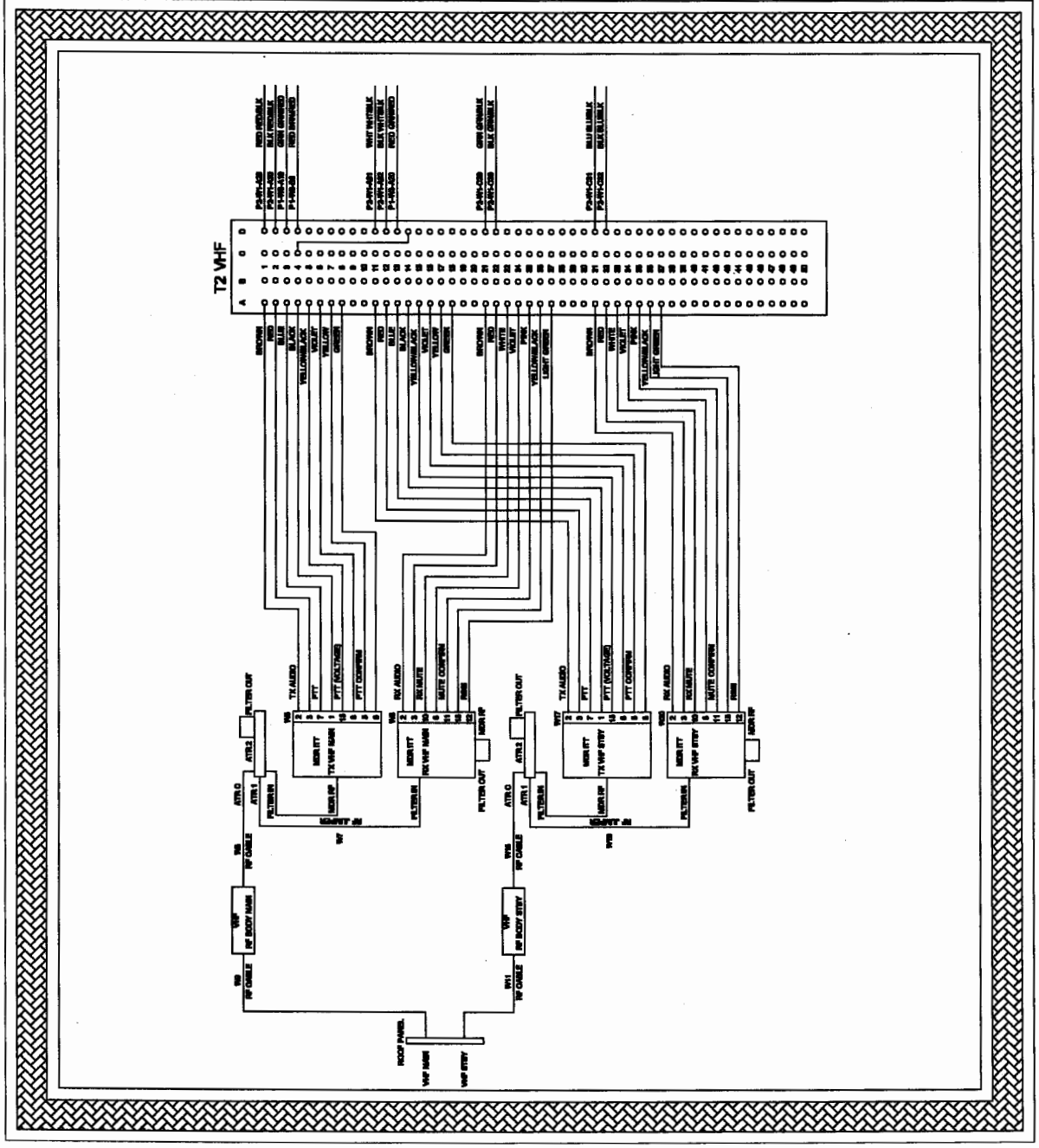

FIGURE 6-9c. TYPICAL EQUIPMENT RACK WIRING FOR RCAG VU (T1)

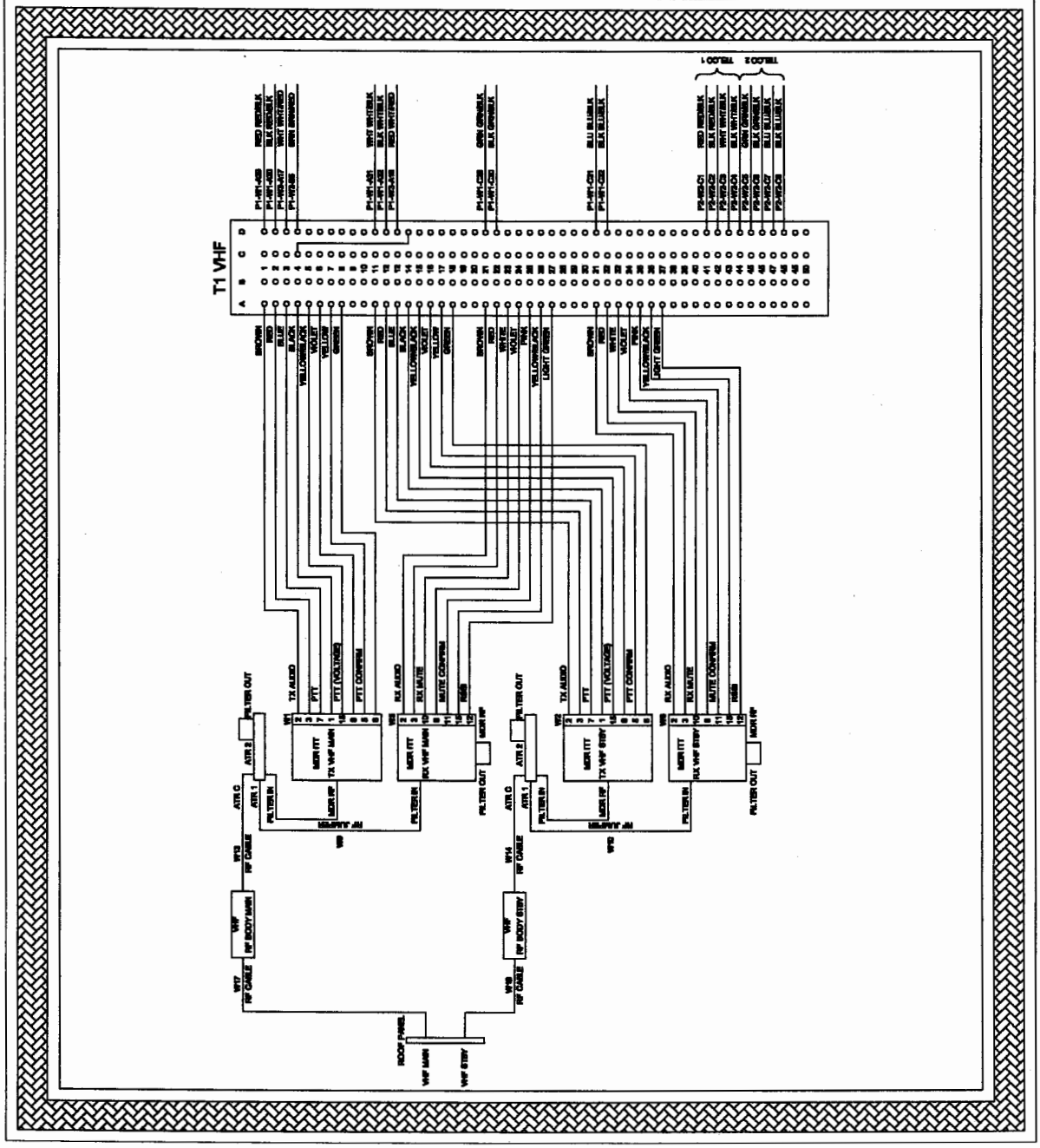

FIGURE 6-9d. TYPICAL EQUIPMENT RACK WIRING FOR RCAG VU (T2)

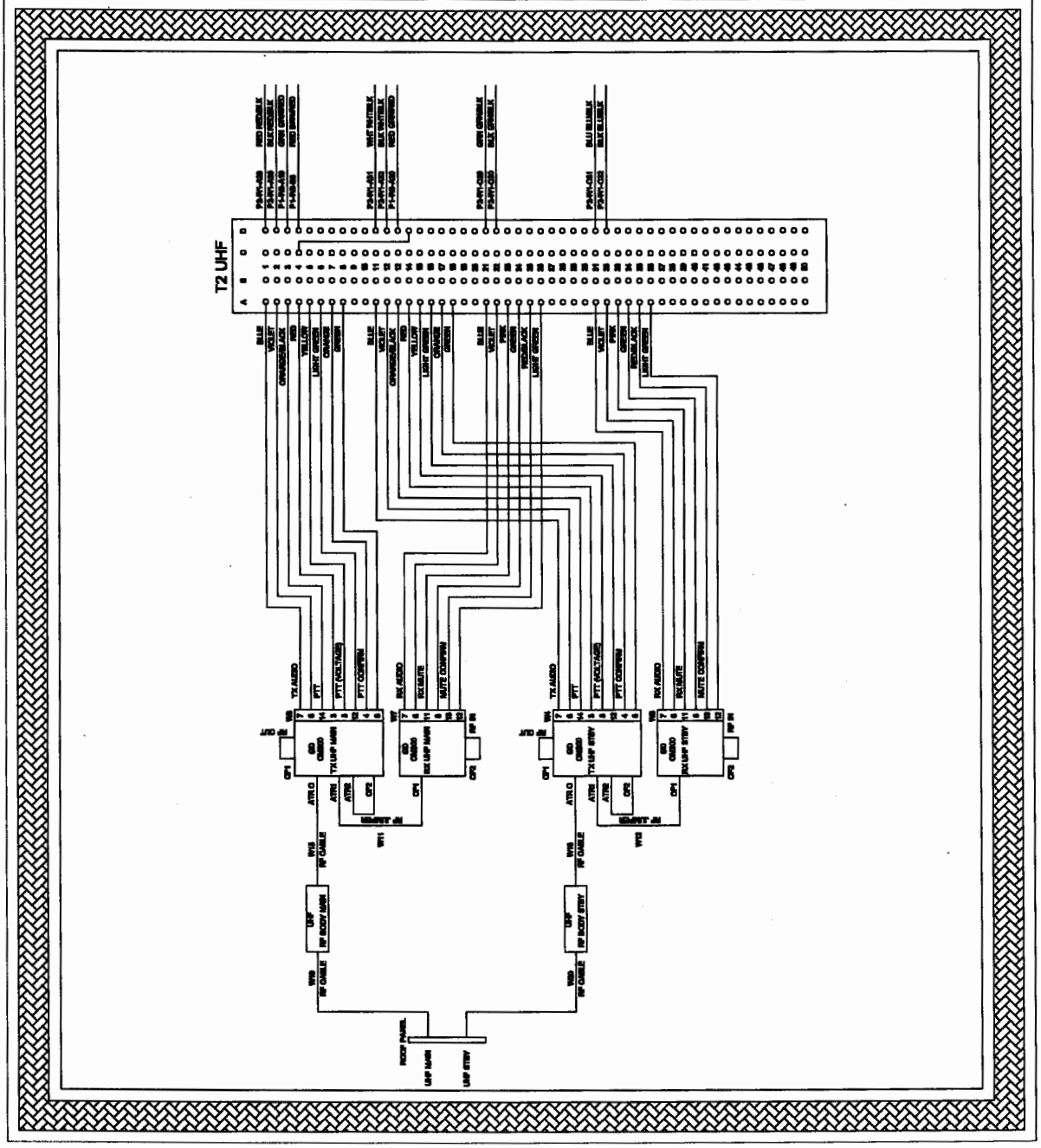

FIGURE 6-10a. TYPICAL LANDLINE CABLE TERMINATION

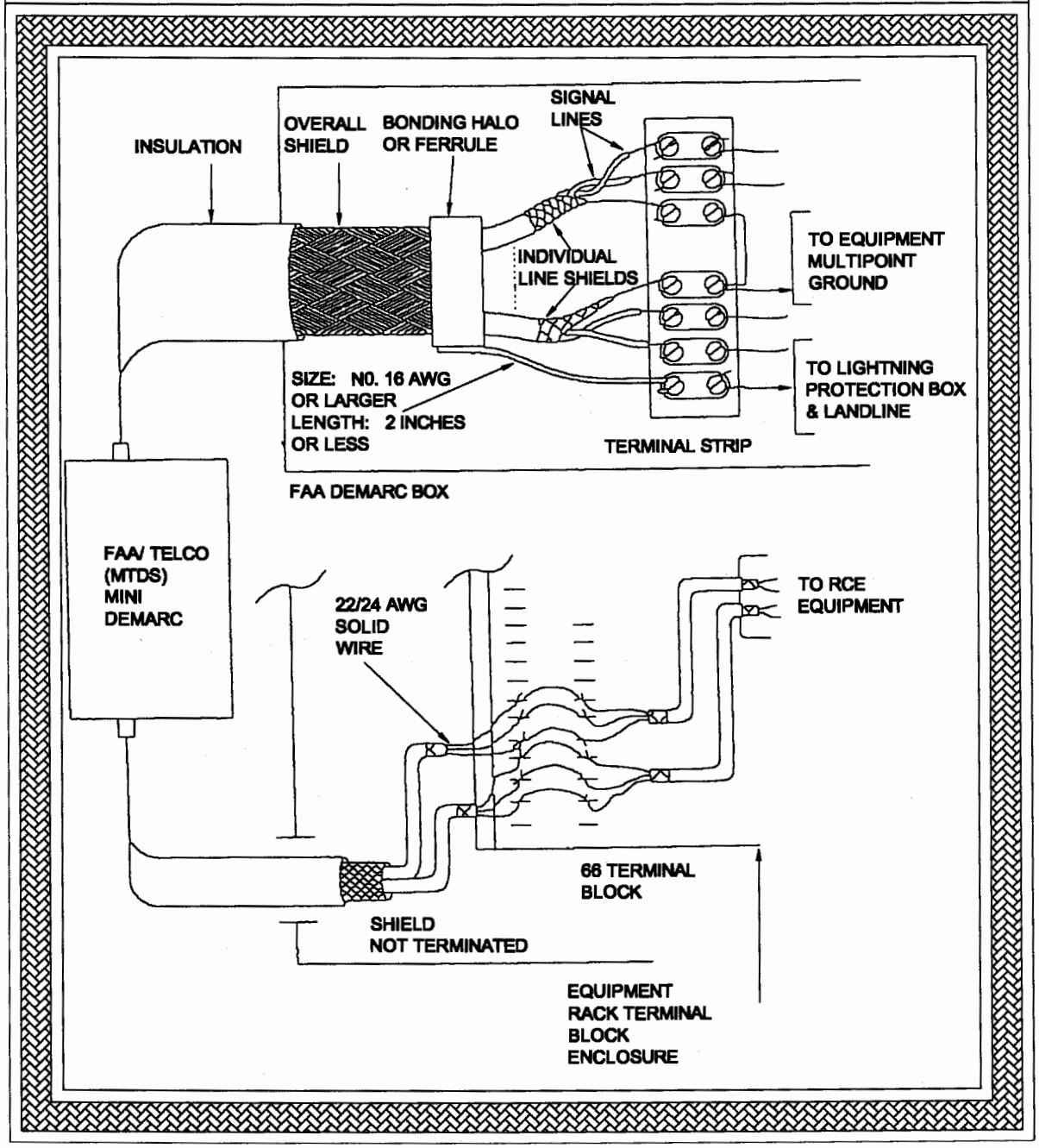

FIGURE 6-10b. TYPICAL LANDLINE CABLE TERMINATION

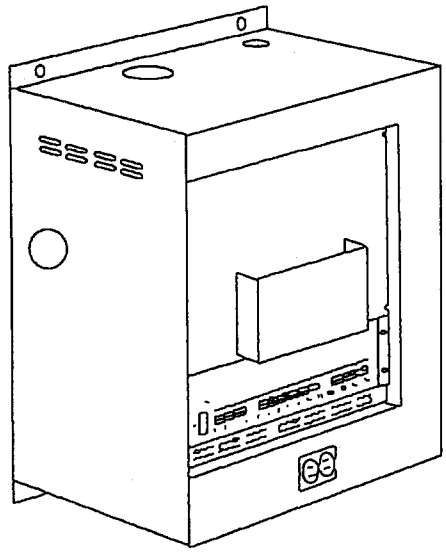

TYPICAL 12 - CIRCUIT MTDS CONFIGURATION

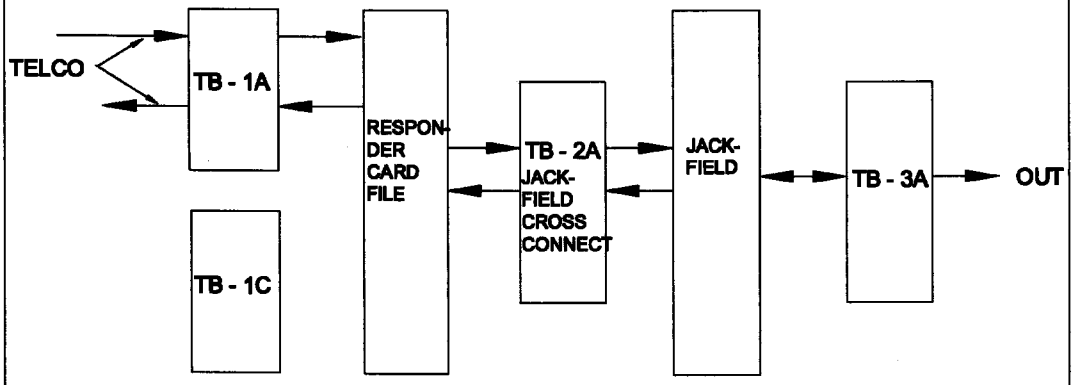

SHEET 2

FIGURE 6-11. TYPICAL RACK EQUIPMENT GROUNDING

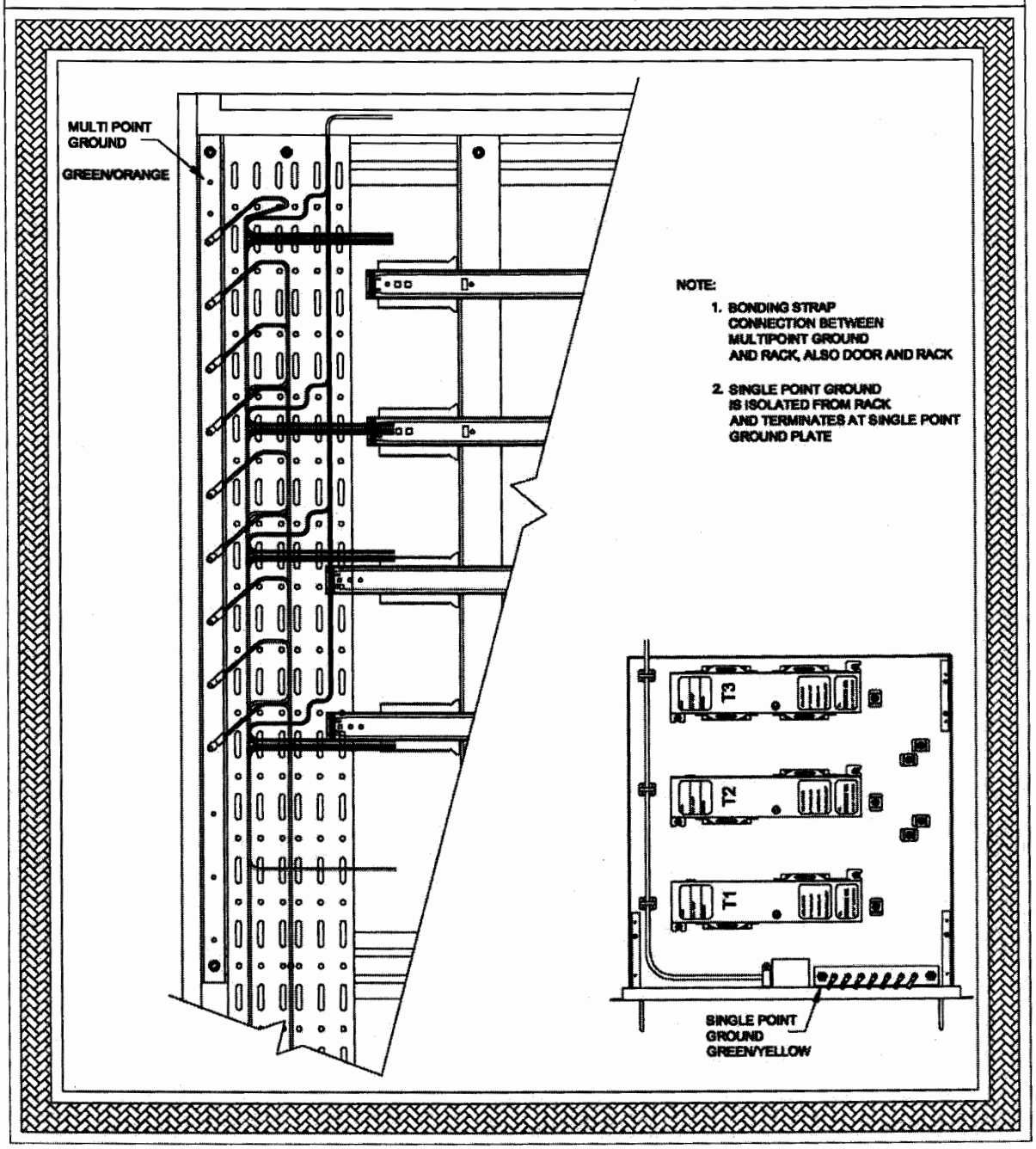

FIGURE 6-12. TYPICAL AUDIO/CONTROL CABLE CONFIGURATION

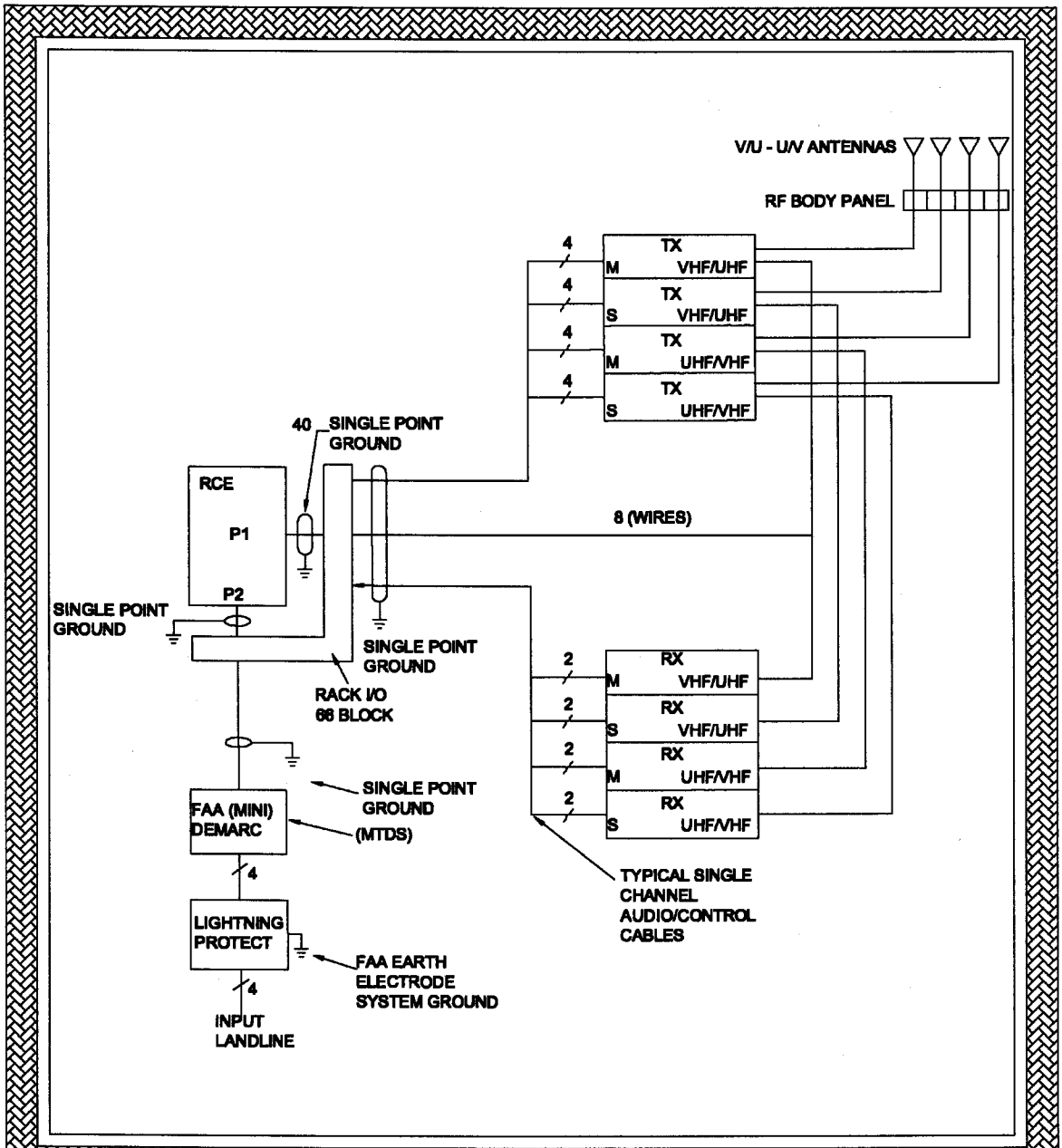

b. Inter-rack Cabling. The inter-rack audio/control cables shall be terminated at each of the designated rack terminal block(s). The inter-rack cables should be installed along the left rear side to the top of the rack(s), as viewed from the rear. See Figures 6-9a through 6-9d for wiring reference. Audio and control inter-rack wiring shall be routed through metallic ducts or shielded cable trays and shall be routed separate from all power cables in accordance with FAA-STD-019. The inter-rack RF cables shall be routed through an access opening in the top of the rack.

c. Equipment Grounding. All equipment within a rack shall have an electrical connection to the site multipoint grounding system. Each piece of interior equipment shall have a separate connection to the rack multipoint copper bus bar ground. The bus bar shall be connected to the rack frame through a metal-to-metal mechanical connection or through a separate wire jumper loop. The bus bar shall be connected to a nearby multipoint ground plate with two conductors. The two conductors shall be of unequal lengths (by at least 30%) and sized based on FAA-STD-019 (but in no case smaller than # 4). The AC power cord shall provide a separate protection ground along with power wiring as shown in Figure 6-11.

168. COAXIAL CABLE.

There are three general types of RF coaxial cables that may be used at RCF sites. Cable flexibility, loss, and expense should be choice factors. When possible, cable runs should be engineered to have less than 3dB of loss between the radio to the antenna. Cable characteristics for samples of the three types of coaxial cables are listed in the following chart:

Characteristics of 50 Ohm Coaxial Cable

Cable Type	Cable	Attenuation (dB/100-ft)		Outer Diameter (in)	Minimum Bend Radius (in)	Cable Weight (lb/ft)
		150 MHz	450 MHz			
Patch Cable	RG-214	2.9	5.5	0.425	3	0.130
	FSJ1 (1/4" Heliax Superflex)	2.21	3.91	0.29	1	0.045
	LDF1 (1/4" Heliax)	1.52	2.71	0.345	3	0.06
	LMR - 400	1.5	2.7	0.405	1	0.068
	FSJ4 (1/2" Heliax Superflex)	1.28	2.31	0.52	1.25	0.14
Low Loss	LMR - 600	1.0	1.7	0.59	1.5	0.131
	LDF4 (1/2" Heliax)	0.815	1.45	0.63	5	0.15
	LMR - 900	0.7	1.2	0.87	3	0.266
Very Low Loss	LMR - 1200	0.5	0.9	1.2	6.5	0.448
	VXL5 (7/8" Heliax Flex)	0.491	0.878	1.08	5	0.29
	LDF5 (7/8" Heliax)	0.449	0.808	1.09	10	0.33

a. **Patch Cable.** Double shielded or corrugated shield patch type coaxial cables are used for all transmitter frequency combiner harnesses and general interior interconnection cable because of improved shielding characteristics and better mechanical flexibility. FSJ and LDF cables have corrugated shields. LMR and RG-214 are double shielded. When possible and if an internal cable run is more than 25 feet, a lower loss cable shall be used.

b. **Low Loss.** Low-loss coaxial cable shall be installed where practical. Low-loss coaxial cable may be used in short runs of 50 feet or less where it is impractical to install the larger more rigid cable. The major restriction in using large diameter cables within the building is cable bend radius. The cable bend radius should be greater than the recommended bend radius of the cable. Inspect all cable at an RCF for handling or shipping damage before installation.

c. **Very Low Loss Cable.** When possible, very low loss cable should be used to minimize total loss between the radio and antenna. The cable bend radius is greater than the recommended minimum bend radius of the cable. Do not use in areas where repeated bending may occur such as the base of a tilt down tower or between the antenna tower junction box and the antenna.

NOTE: Higher than recommended pulling forces, scraping forces around bends or edges, and accidental impact and other mechanical stresses can damage the cable during installation.

d. **Coaxial Cable Connectors.** RF coaxial cable connectors shall be chosen to match the cable type and weather conditions. N-type connectors shall be used in all locations with the exception of indoor rack test points where BNC connectors can be used. Figures 6-13, Typical Transmitter RF Cabling System, and 6-14, Typical Receiver RF Cable System block diagrams illustrate the coaxial cables and associated connectors. Table 6-1, Antenna System Materials List, gives common connector types and their part numbers.

169. RF COAXIAL CABLE INSTALLATION.

All RF coaxial cables shall be supported with appropriate mechanical strap or tie wraps. These supports should not be over tensioned and squarely cut with no sharp exposed edges. Supports are used to prevent chafing and stress to RF connectors and cables. All RF cables shall be neatly dressed within the racks, separate from AC power or audio/control cabling. The shield and center conductor on all spare or not in use coaxial cable shall be terminated directly to the nearest appropriately ground metal on both ends.

FIGURE 6-13a. TYPICAL TRANSMITTER RF CABLING SYSTEM (WITH COMBINER)

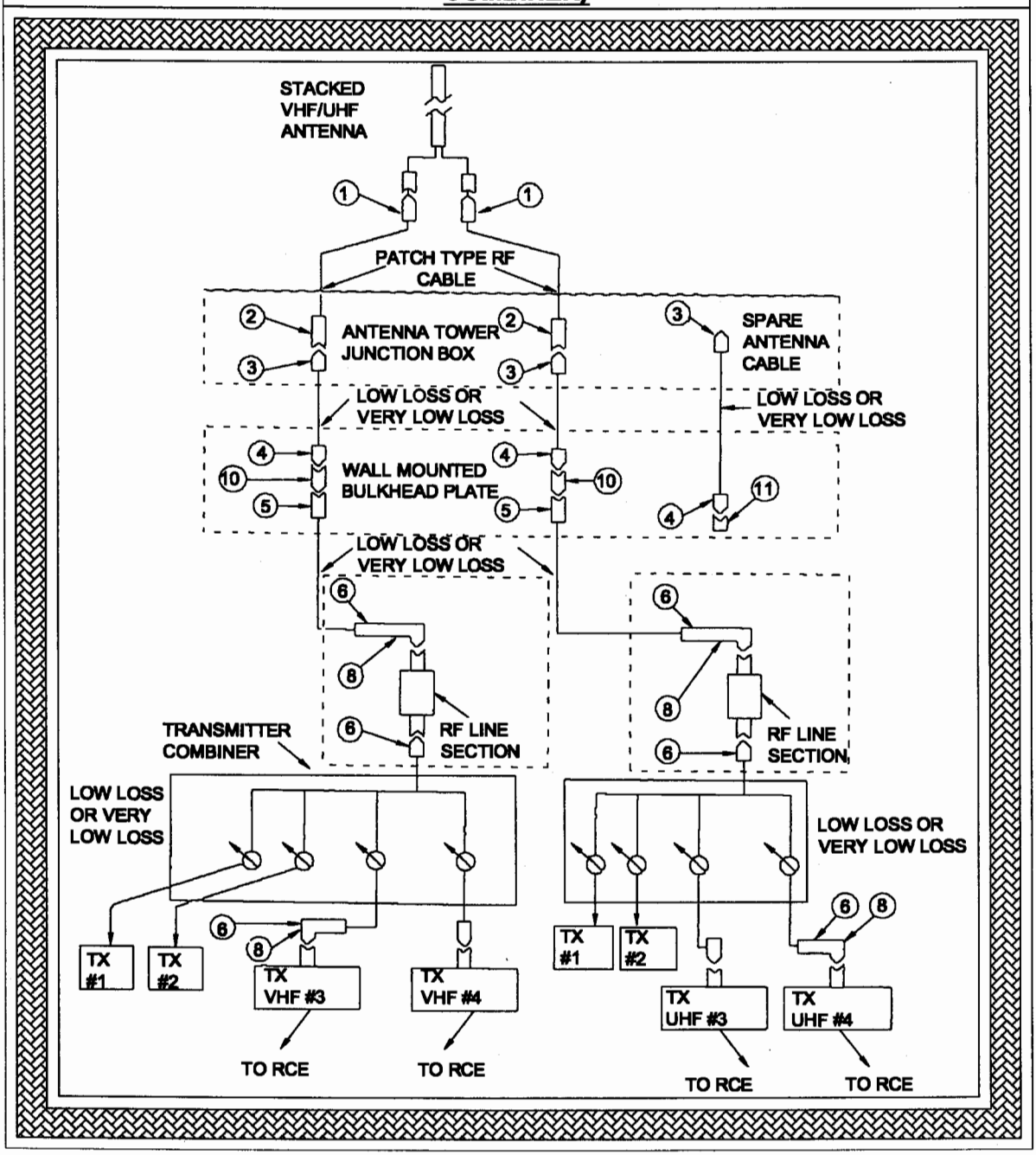

FIGURE 6-13b. TYPICAL TRANSMITTER RF CABLING SYSTEM (WITHOUT COMBINER)

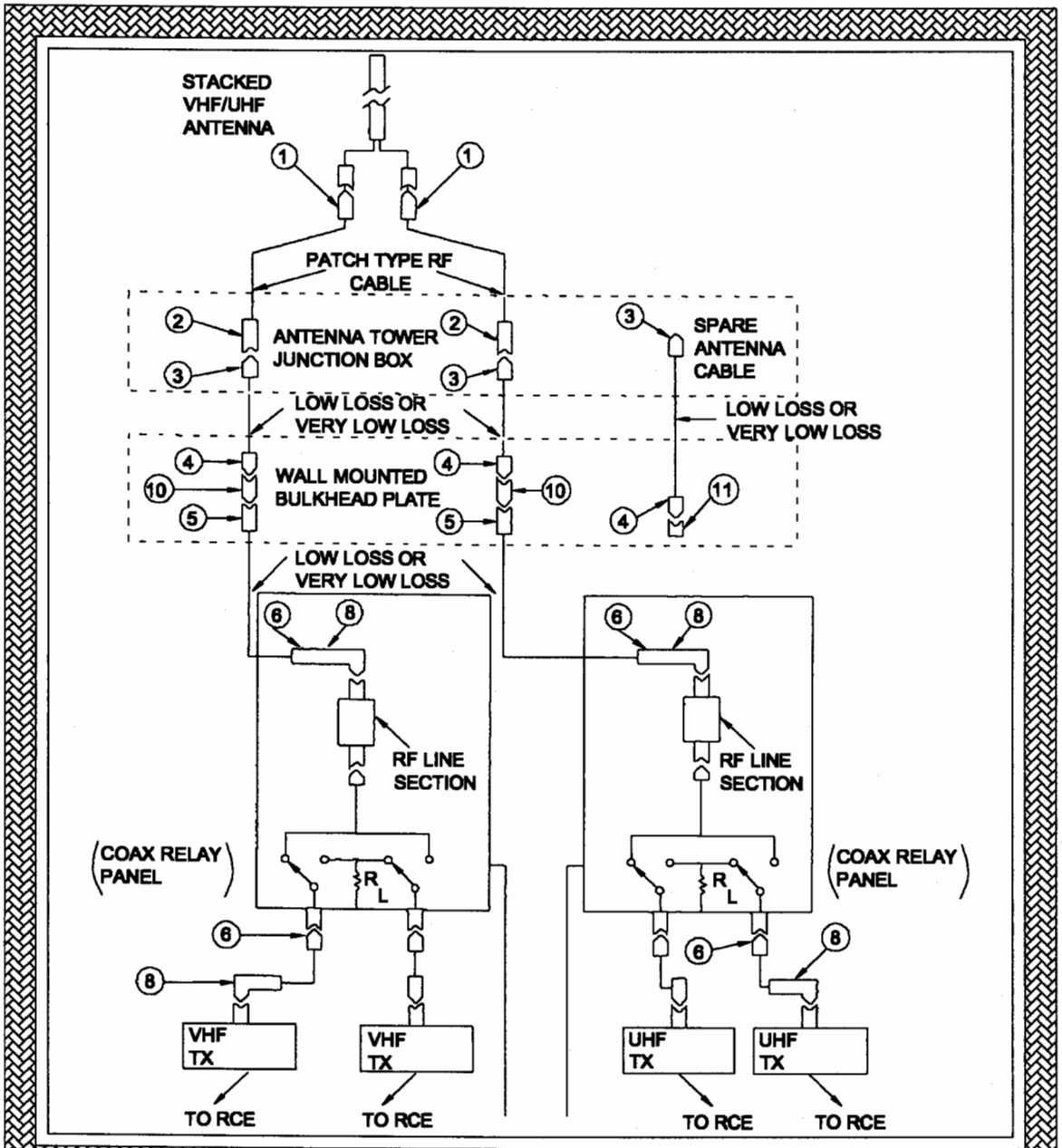

FIGURE 6-14a. TYPICAL RECEIVER RF CABLING SYSTEM (WITH MULTICOUPLER)

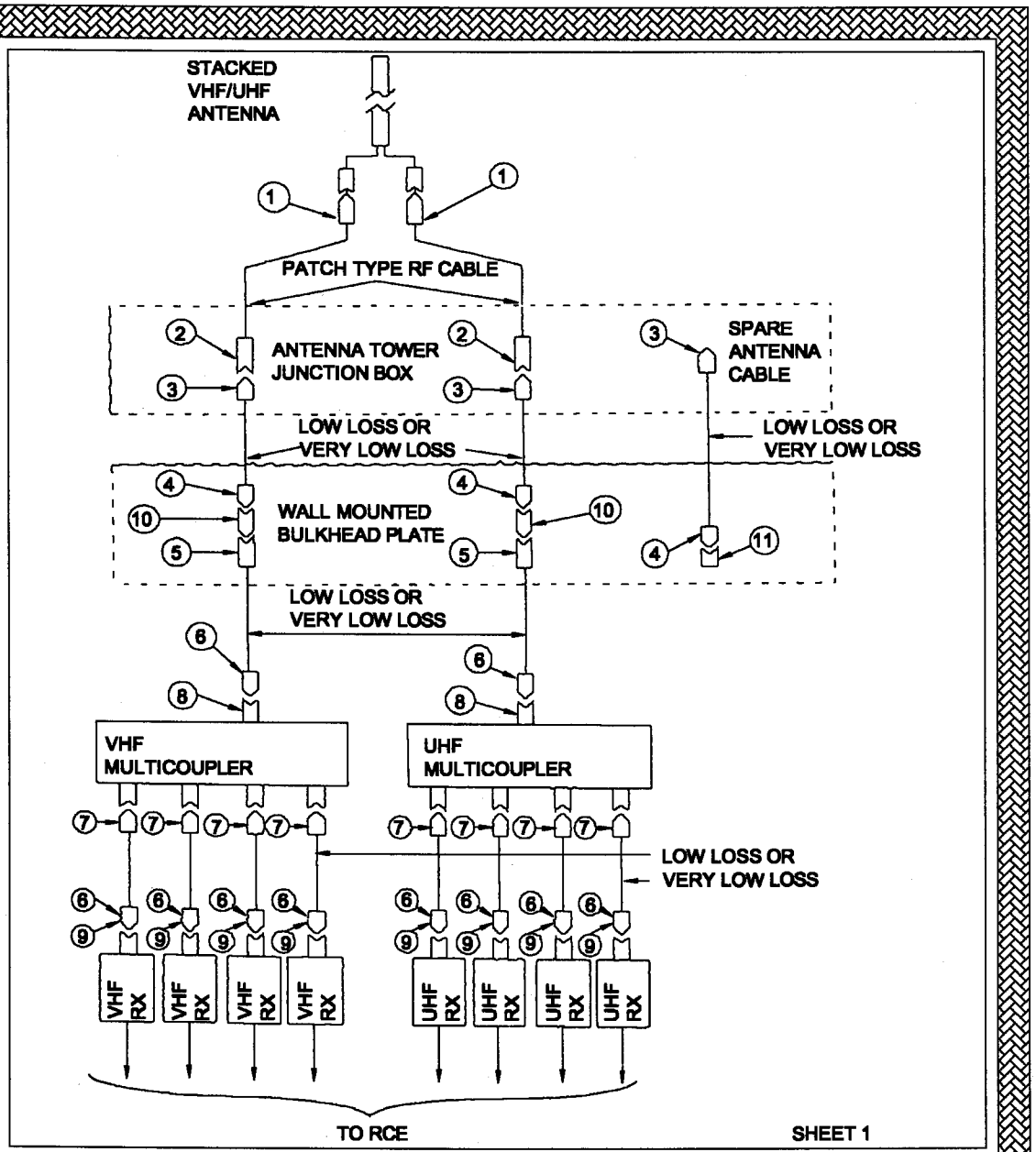

FIGURE 6-14b. TYPICAL RECEIVER RF CABLING SYSTEM (WITHOUT MULTICOUPLER)

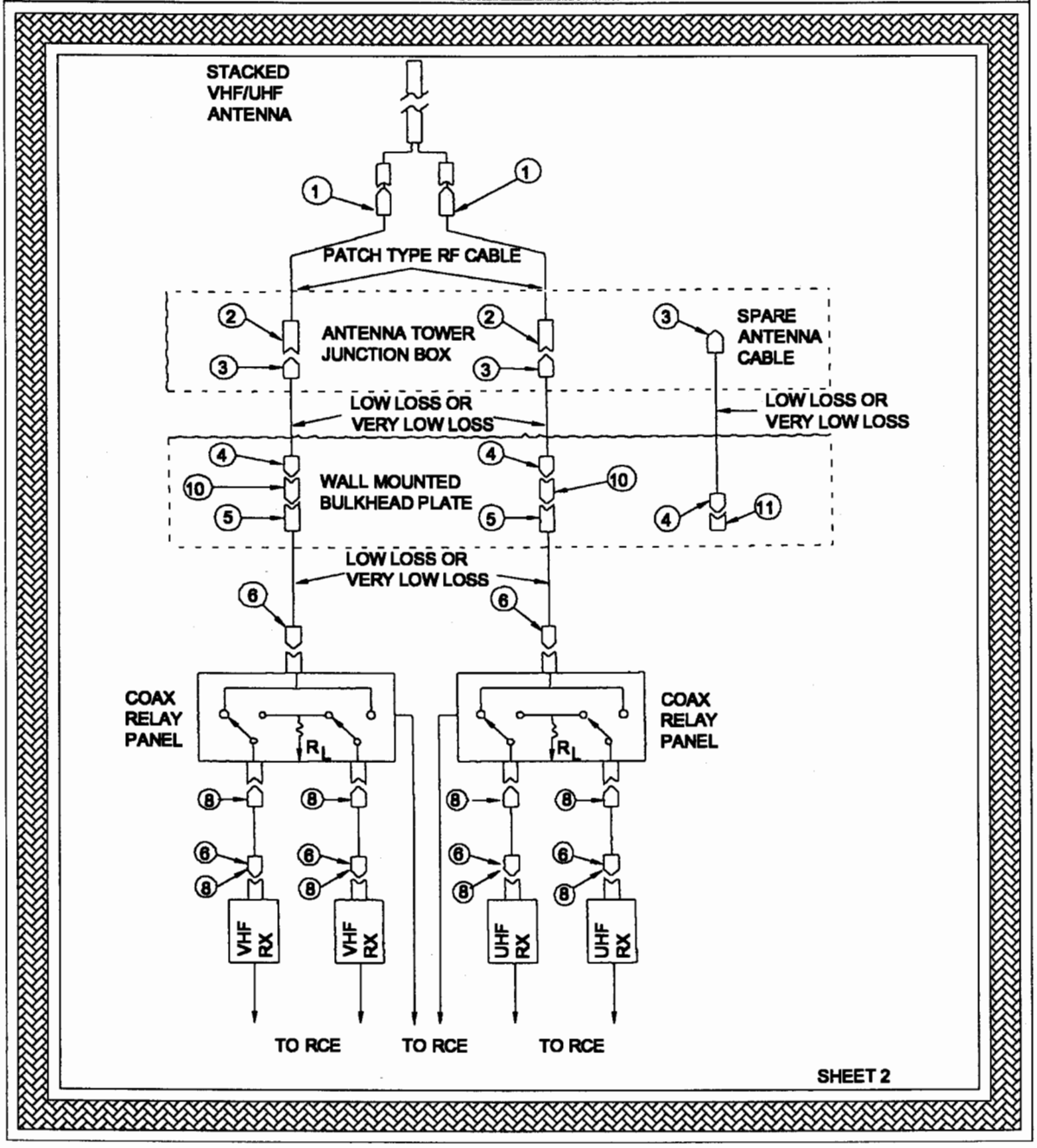

TABLE 6-1. ANTENNA SYSTEM MATERIALS LIST

ITEM No.	CABLE TYPE	CONTACTS	SERIES	TYPE
1.	PATCH TYPE	MALE	N	STR'T PLUG
2.	PATCH TYPE	MALE	N	STR'T PLUG
3.	LOW LOSS OR VERY LOW LOSS LOW LOSS OR VERY LOW LOSS	FEMALE FEMALE	N N	STR'T JACK
4.	LOW LOSS OR VERY LOW LOSS LOW LOSS OR VERY LOW LOSS	FEMALE FEMALE	N N	STR'T JACK
5.	PATCH TYPE PATCH TYPE	MALE MALE	N N	STR'T PLUG
6.	PATCH TYPE PATCH TYPE	MALE MALE	N N	STR'T PLUG
7.	PATCH TYPE	MALE	BNC	STR'T PLUG
8.	PATCH TYPE PATCH TYPE	MALE MALE	N BNC	ANGLE PLUG
9.	PATCH TYPE	MALE	N BNC	STR'T PLUG
10.	–	M/F	N	IMPULSE SUPPRESSOR
11.	ALL USED RF CABLES SHOULD BE BONDED DIRECTLY TO ADJACENT METAL WORK AT BOTH ENDS.			

NOTE: CONNECTORS ARE WEATHER PROOF, 50 OHM IMPEDANCE.

a. **Transmitter Output Cable.** In combiner applications, install patch type coaxial cable or equivalent from the transmitter RF output jack via the combiner cavities to the input of the designated RF coaxial line section panel located at the top of the transmitter equipment rack. In applications where coaxial transfer relay panels are used, patch type coaxial cable is installed from the transmitter output jack to the input jack of the coaxial relay. The output of the relay is connected to the RF line section with a length of patch type cable. In all cases the matching cable to connector type is used.

b. **Receiver Input Cable.** Install patch type coaxial cable, or equivalent, from the receiver equipment RF input jack to the designated RF output of the active multicoupler or RF relay panel. Great importance shall be placed on this cable's length since cable attenuation is critical. Cable length shall be as short as possible when equipment is placed in separate racks. In Transmit/Receive (T/R) relay applications special importance shall be placed on cable length. If the cable length is 25 feet or more, low loss cable shall be used with the applicable type connectors to connect to the multicouplers BNC input jacks. In cases where coaxial relay panels are supplied, type "N" connectors will be used with low loss type coaxial cable.

c. **Cavity Interconnect and Harness Cables.** The interconnect and harness cables are precut and fabricated for the specific combiner frequencies as shown in Figure 6-15, VHF Transmitter Combiner Cavity Cable Harness and in Figure 6-16, UHF Transmitter Combiner Cavity Cable Harness. Double-shielded patch coaxial cable shall be used to minimize RF leakage that would allow signals to bypass the cavity filters. The cable lengths used for the interconnects and phasing cables are critical and have been optimized at the manufacturer for the specific frequencies to be combined and the tuning range of the cavities.

d. **Cavity Interconnect and Harness Cable Installation.** Ensure that the pre-fabricated factory-supplied interconnecting and harness cables packed with the cavities are connected as instructed for each transmitter frequency. Double-shielded or corrugated shield patch coaxial cable and silver-plated brass connectors shall be used. Ensure that the cables do not have sharp bends or kinks and are supported with nylon cable ties to minimize any physical strain on the coaxial cable connectors.

FIGURE 6-15. VHF TRANSMITTER COMBINER CAVITY CABLE HARNESS

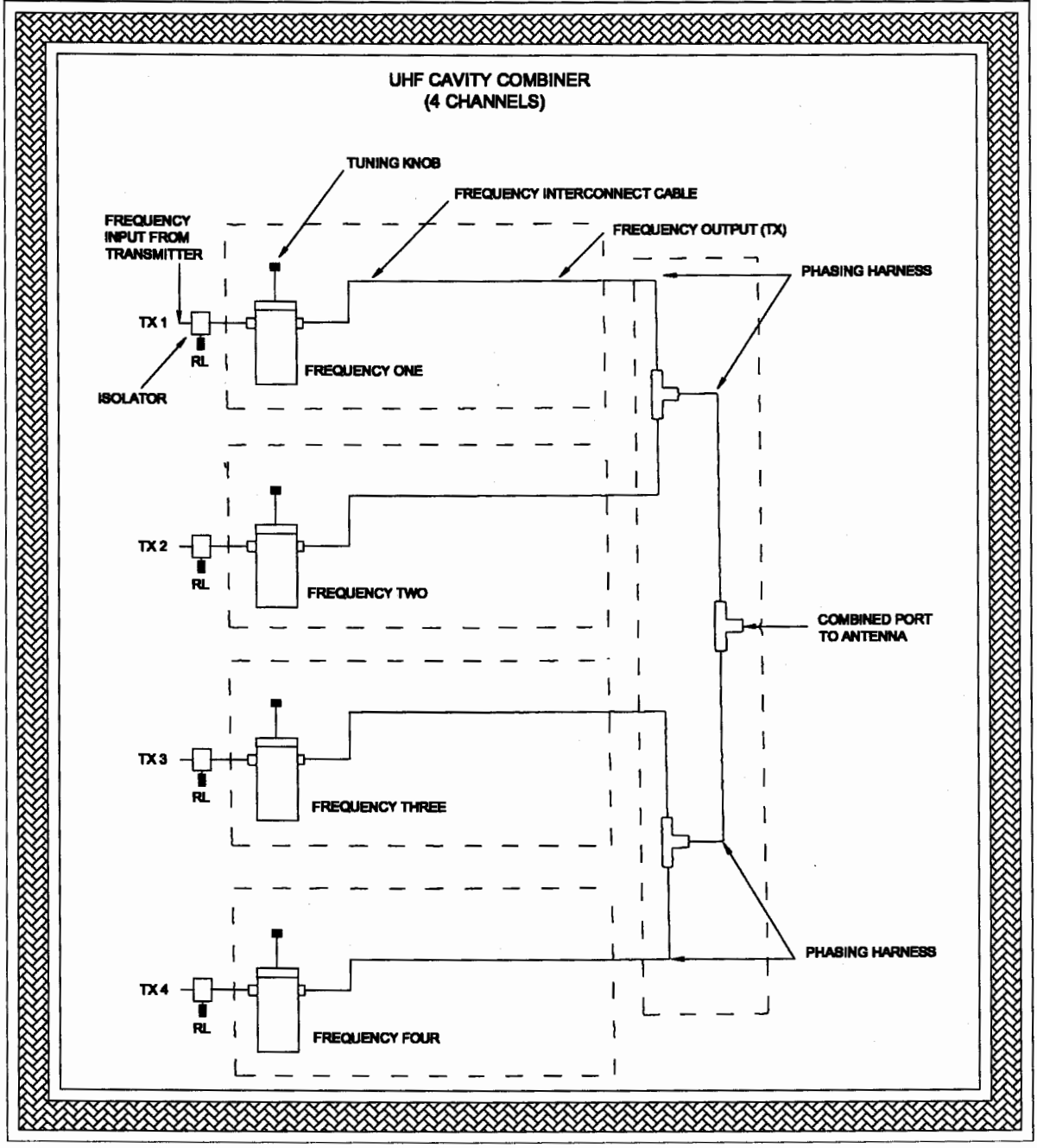

FIGURE 6-16. UHF TRANSMITTER COMBINER CAVITY CABLE HARNESS

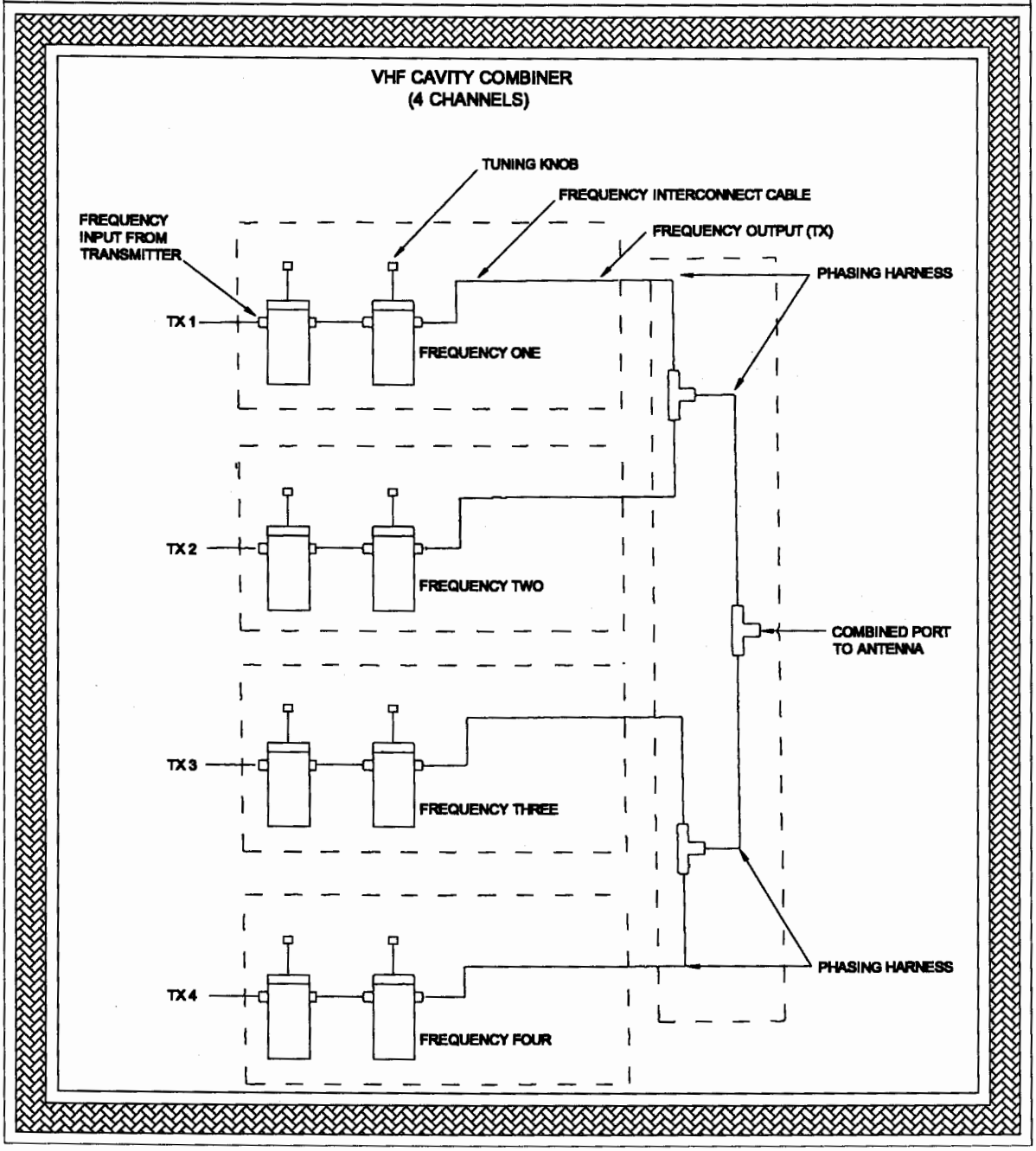

170. RF CABLING FOR CM-200 TRANSMITTER/RECEIVER (T/R) CONFIGURATION.

This Radio/Antenna Arrangement is called the T/R Configuration. Figure 6-16a, CM-200 Radio T/R Antenna Configuration, is a generic block diagram of a radio and antenna arrangement operated in a T/R configuration. This diagram contains no LPAs and represents a 10-Watt channel. Many ATC radio services contain a pair of frequencies, often a UHF and VHF frequency that are keyed together. That way, pilots with UHF and VHF radios are aware of each other's presence in the airspace. In the T/R configuration, only on frequency is used. The cabling would be identical for each additional channel. The T/R configuration has significant advantages over the main/standby configuration.

FIGURE 6-16a. CM-200 RADIO T/R ANTENNA CONFIGURATION

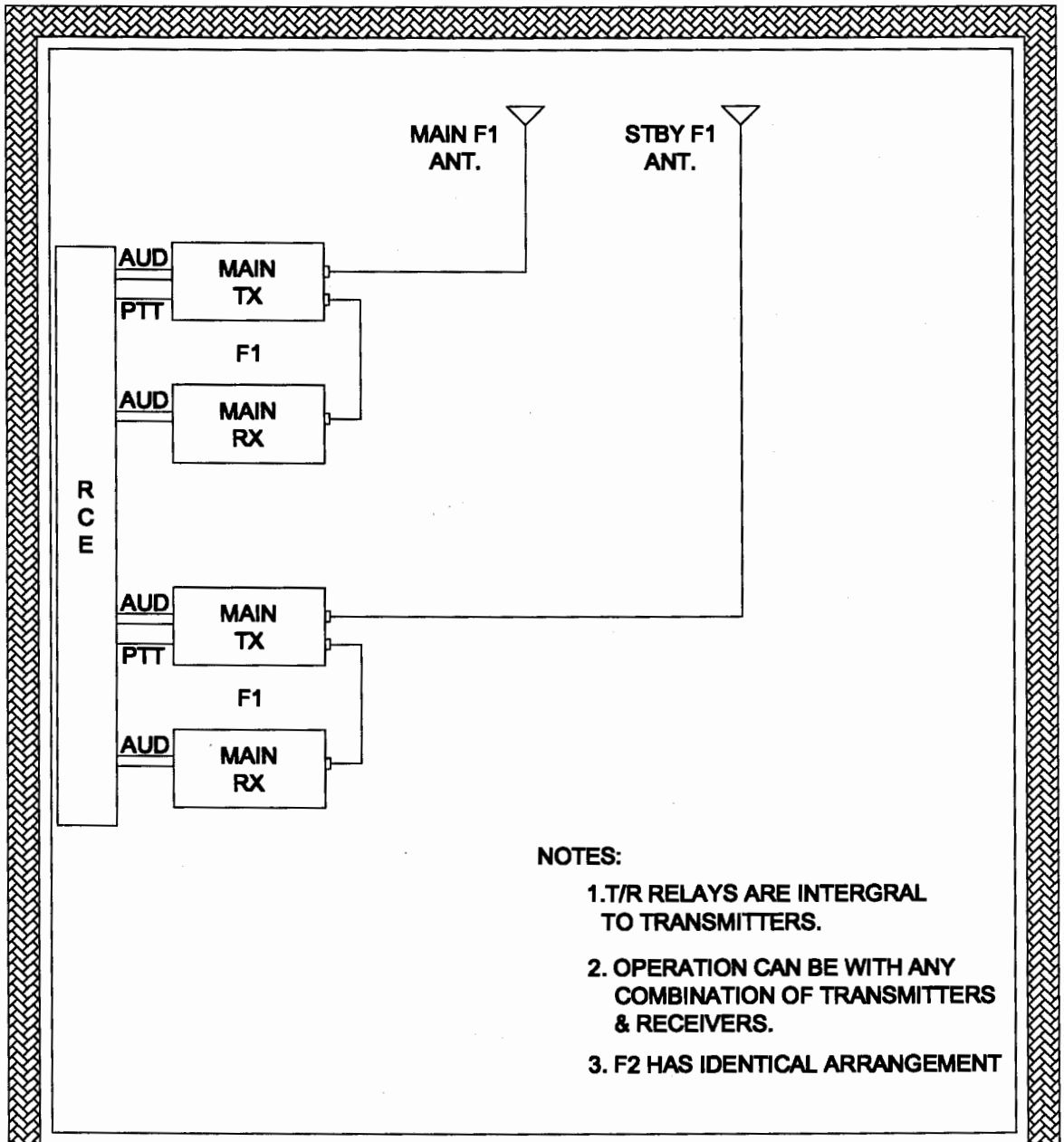

NOTES:

1. T/R RELAYS ARE INTERGRAL TO TRANSMITTERS.
2. OPERATION CAN BE WITH ANY COMBINATION OF TRANSMITTERS & RECEIVERS.
3. F2 HAS IDENTICAL ARRANGEMENT

a. **The Internal T/R Relay**. The internal transmitter T/R relay is used to connect the receiver, as well as the transmitter, to the antenna. The internal relay is usually of high quality design since it is part of the radio and is covered by the manufacturer's warranty.

b. **Reliability.** The main and standby radios are on separate antennas. A single RF component failure only results in reduced service, not a full outage.

c. **Main and Standby Configuration**. While it is not uncommon for ATC to use a main transmitter/standby receiver, main and standby transmitters and receivers are operated as a set. Thus, the transmitter and receiver in use are on the same antenna. This provides both uplink and downlink the same radio coverage and minimizes situations where the controller can hear the pilot but not vice versa, due to different antenna patterns. In the unkeyed state, both receivers are connected to antennas and capture transmissions from aircraft, other diversity sites, BUEC sites and the local transmitters. This is helpful in trouble diagnosis by the maintenance technician because both RF receiving systems can be compared for signal level, ambient noise, distortion, etc. RF cabling, number of connectors and other RF components are minimized so the system's loss is decreased. This configuration is preferred and uses the same number of radios and antennas as the main/standby configuration.

171. T/R RF CABLING FOR FIXED-TUNED VHF MDR.

Figure 6-16b illustrates a main and standby T/R radio and antenna configuration using MDRs model CAVU-2100. These are NEXCOM replacement radios representing the current state of the NAS in 2005 and beyond. In the MDR transmitter the ATR switch and bandpass filter are located in the assembly that mounts on top of the radio. Figure 6-16b represents both the 10-Watt and 50-Watt configurations. The transmitter's power is adjustable and only the cavity filter is rated as low or high power. The pre-selector filter seen on the MDR receiver is actually inside the radio chassis and is utilized in the fixed-tuned mode to provide better protection from out-of-band RF energy, primarily from the FM radio band just below the VHF air navigation band. Both transmitter and receiver filters must be screwdriver-tuned to the channel frequency as part of the installation. Both transmitter and receiver filters are cabled into the antenna path (or bypassed) with coaxial jumpers that attach on the rear of the radio chassis. If external cavities filters are installed at the site, the radio filters may be bypassed as determined by Spectrum Management, and particular to the site.

FIGURE 6-16b. FIXED - TUNED MDR IN T/R CONFIGURATION

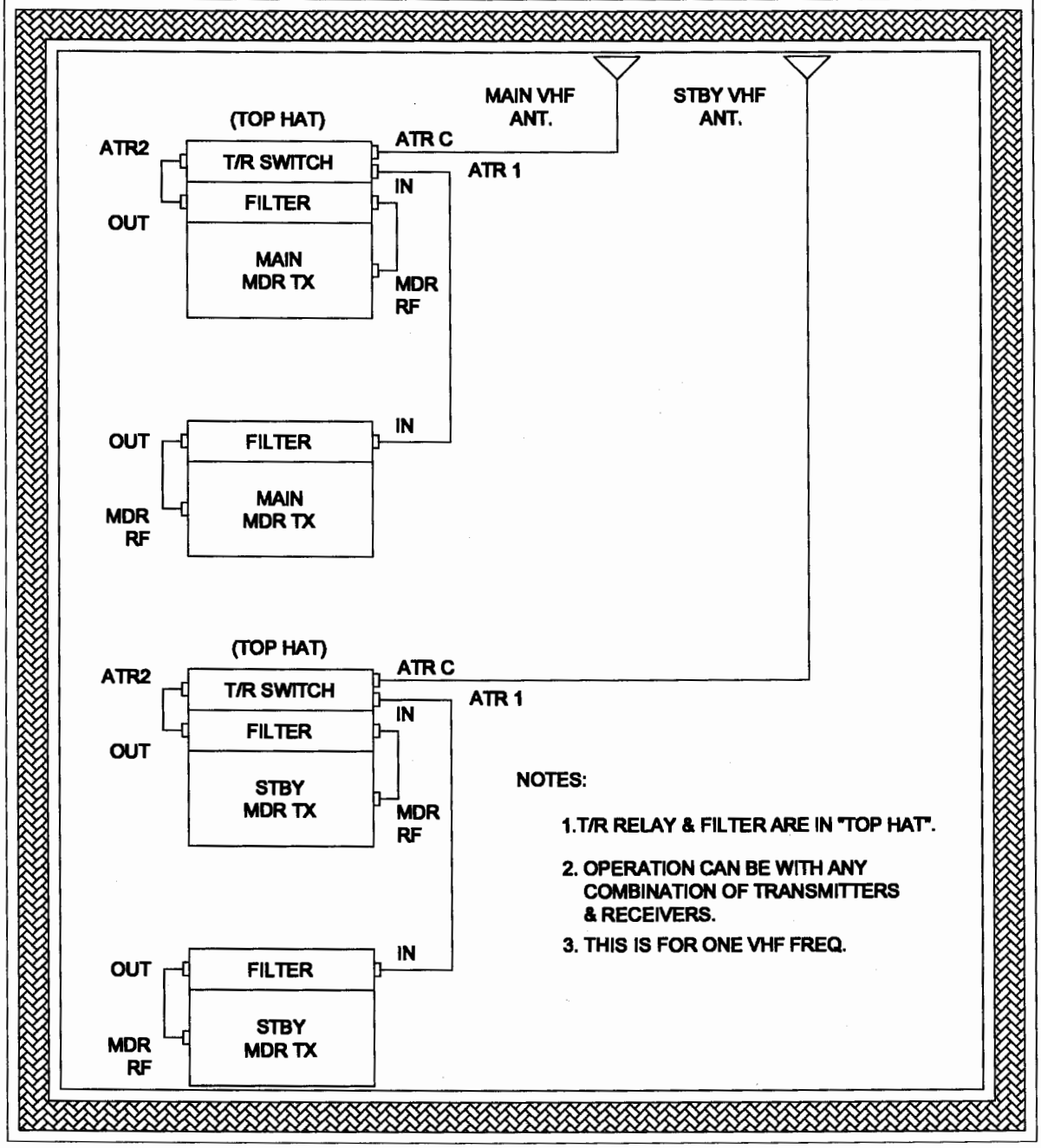

172. T/R RF CABLING WITH CAVITY COMBINERS.

Figure 6-16c depicts a transmitter/receiver arrangement with cavity combiners. Depending on the frequency separation, multiple independent frequencies can be operated from one antenna at the same time. The cavity arrangement will vary depending on the amount of isolation needed between frequencies. Figure 6-16c is for a MAIN set of radios only. The STANDBY set would be identical and cabled to the standby antenna to provide completely redundant operations. This arrangement is often used at an ATCT where roof top antenna space is at a premium, or in a leased site where the FAA is allocated limited antenna space on the tower. A main UHF and VHF set of radios can be combined on a stacked U/V antenna such as a DPV-39 or equivalent. Each UHF and VHF set would have its own combiner assembly. The standby sets would be on another DPV-39, preferably on the opposite side of the parapet to provide some space separation. Main and standby sets of three UHF and VHF frequency pairs could easily require a total of 24 cavities. As they can be mounted in groups of six, this combiner would require about 10 feet of wall space behind the radio racks. Any combination of main and standby transmitters and receivers for each frequency can be selected and will operate independently of other frequencies.

FIGURE 6-16c. FIXED TUNED MDR WITH CAVITY COMBINERS

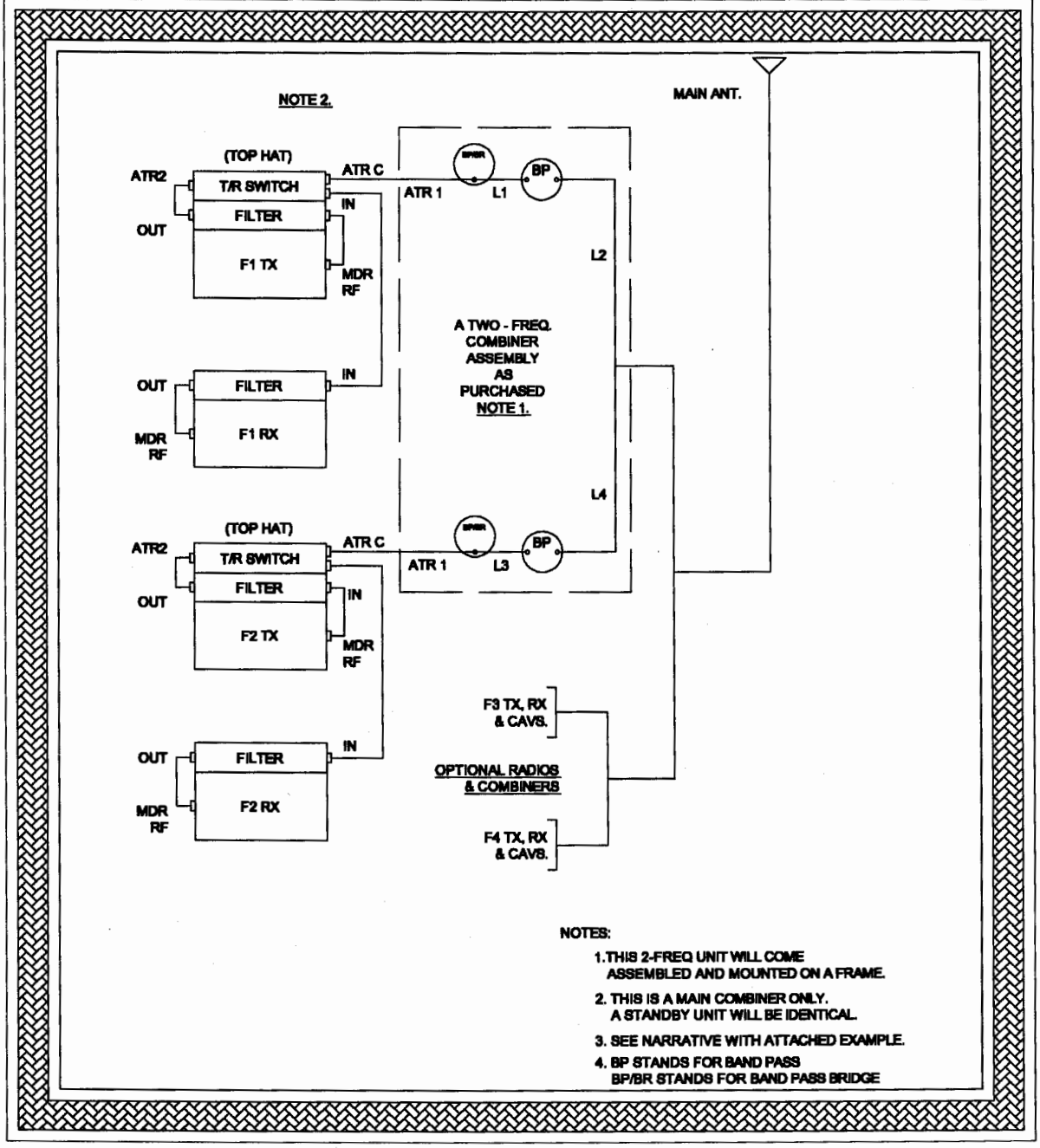

NOTES:

1. THIS 2-FREQ UNIT WILL COME ASSEMBLED AND MOUNTED ON A FRAME.
2. THIS IS A MAIN COMBINER ONLY. A STANDBY UNIT WILL BE IDENTICAL.
3. SEE NARRATIVE WITH ATTACHED EXAMPLE.
4. BP STANDS FOR BAND PASS BP/BR STANDS FOR BAND PASS BRIDGE

a. Typical Cavity Combiner Configuration.

Depending on the frequency separation, up to four different frequencies can be combined in this manner. Figure 6-16c depicts a two-frequency combiner assembly but if there are three or four frequencies combined, the combiner design would include all the cavities and cable lengths to provide the proper 50 Ohm impedance at the transmitter and antenna feed points.

b. Process for Combiner Selection.

The combiner design process might proceed as follows, with the caveat that frequencies on a cavity combiner should be at least 1 MHz apart and in no case closer than 500 kHz. The frequencies are identified first and entered into the Space Loss Calculator Combiner Application. Start with a one band Pass/band pass bridge (BP/BR) and one BP cavity with minimum (0.5 dB) insertion loss in each line and let the program determine the amount of isolation this arrangement provides between each of the frequencies. To work well, there should ideally be no more than -105 dBm (1.25 uV) of energy on any frequency from any of the other frequencies. If each transmitter is 10 Watts (+40 dBm), +40 dB to -105 dB is 145 dB isolation. This is necessary because some frequencies will be transmitting while others are receiving. Each receiver itself will provide a minimum of 60 dB protection from other channels by way of its IF selectivity. 145 dB minus 60 dB leaves 85 dB of isolation to be provided by the combiner. In practice, there are other losses in the RF plumbing so 80 dB of isolation between frequencies will usually work. The combiner cavities will provide increasingly more selectivity as the coupling is increased. This will increase the insertion loss. The allowable insertion loss of the combiner that will provide adequate TX power to the antenna depends on the coverage requirement. Typically this is not a problem in the terminal environment where distances may be 2 miles for ground control and clearance delivery, 10 nautical miles for local control, and 60 nautical miles for approach and departure control. The transmitter power less the combiner insertion loss (and other nominal losses) equals the effective radiated power (ERP). Combiners are not typically needed in the en-route environment since remote sites have adequate antenna space and ERP needs to be maximized to cover large service volumes in excess of 100 nautical miles. The space loss calculator will then determine if the available ERP will provide the design value of 10 uV (-87 dBm) at the edge of the known service volume.

SECTION 4. ANTENNA RF CABLE PATCH PANEL AND BULKHEAD PLATE INSTALLATION

173. BUILDING ANTENNA RF CABLE PATCH PANEL.

The installation of an antenna cable patch panel shall be installed in new and existing facilities. This patch panel provides a common point for manually interconnecting the appropriate coaxial cables. This common point for cable interconnection provides a means of switching antennas, coaxial cable transmission lines, and equipment for maintenance, emergency restoral, and troubleshooting operations. The building antenna RF cable patch panel installation typically consists of two patch panel cabinets. One cabinet provides coaxial cable transitions for transmitters to antenna transmission line. The second cabinet provides coaxial cable transitions for receivers to antenna transmission line. The independent transmit and receive patch panels provide improved isolation between the transmit and receive RF signal paths and improved routing for the cable runs between the building and the transmit and receive antenna towers. A coaxial cable service loop shall be long enough to allow connection to any antenna feed cable as illustrated in Figure 6-17, Typical Outside Wall Mounted Antenna Cable Patch Panel.

a. **Coaxial Cable Patch Panel Installation.** Patch panel installation shall be installed in new and existing facilities. The size of the building antenna coaxial cable patch panel is dependent upon the number of antenna coaxial cables needed to support the facility. For example, two panels, 36-inch by 36-inch by 8-inch weather protected enclosures with twin full-access hinged doors are used to accommodate the 13 transmit and 13 receive cables required at a 24 frequency facility. This example includes two spare coaxial cables, one for transmit and one for receive.

(1) **Panel Location.** Panel enclosures shall be located on the outside wall near the point where the RF cables enter the building. The enclosures shall be installed no more than 4 feet above the floor level. The panel enclosures shall be attached to the wall with appropriate hardware.

(2) **Conduit Installation.** Sections of PVC conduit or aluminum conduit sized to accommodate the existing conduit connectors are installed between the floor's cable entrance and the bottom of the patch panel. Use the manufacturer's recommended conduit fittings.

(3) **Restrictions.** The patch panel shall be installed on an outside wall. A weather-tight cabinet shall be used for outside installation.

FIGURE 6-17. TYPICAL OUTSIDE WALL MOUNTED ANTENNA CABLE PATCH PANEL

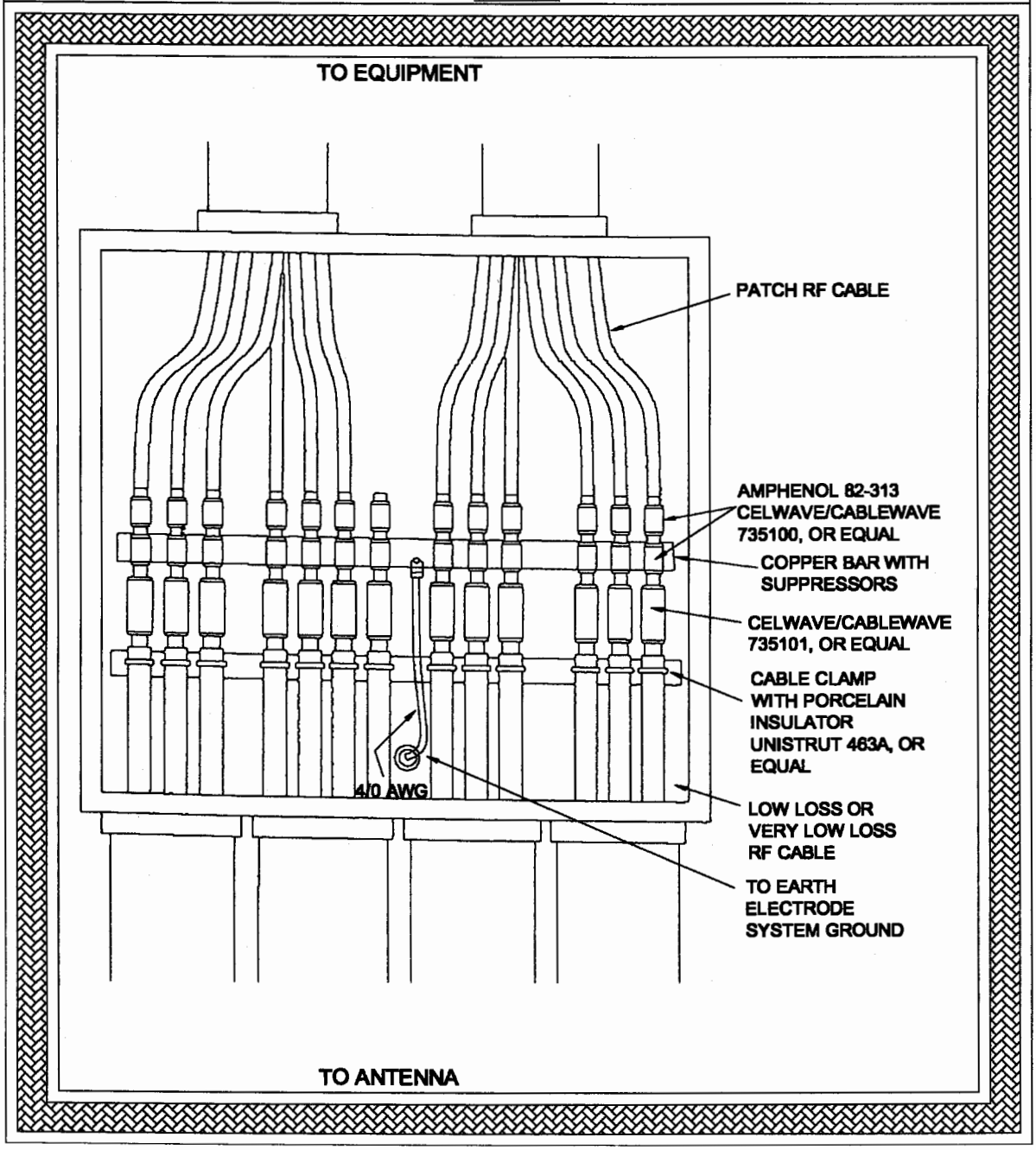

b. Coaxial Cable Installation.

(1) Cable Installation. Extend the low loss RF cable 2 feet into the patch panel. Cut the appropriate RF cable to a one foot length above the enclosure entrance conduit bushing. Install a type "N" female coaxial cable connector on the end of each RF cable. Connector installation instructions that accompany each cable connector shall be used. Each cable shall be anchored to the rear of the enclosure panel with cable clamps that include a non-metallic bushing where the clamp wraps around the cable. These are shown in Figure 6-17, Typical Outside Wall Mounted Antenna Cable Patch Panel. As shown, all coaxial cables shall be common to the facility earth electrode ground system. A copper bar shall interconnect each cable connector together with others. Alternate methods may be used if site conditions require other solutions. Install the RF patch cables from the transmitter combiner's outputs and the receiver multicoupler's input ports through the top of the patch panel enclosure as shown in Figure 6-17.

(2) Wireways. Metal cable trays in the building shall be used to support the patch coaxial cables between the RCF communications racks and the coaxial cable patch panel enclosure. Ensure that a grounded metallic barrier exists between the coaxial cables and any audio, control, or power cables within the cable trays.

(3) Patch Panel Cable Junction. RF Patch cable shall extend through the top of the patch panel enclosure and approximately 3 feet into the open space. Sufficient cable slack shall be made available in the RF patch cable to allow connection with low loss RF cable fitting. Conduit cable protection bushings shall be installed at the enclosure's top entrance. Prepare the RF patch cables and install a type "N" male coaxial cable connector on each cable. Cable connector installation instructions that accompany the connectors shall be used. Cables shall be supported within the patch panel enclosure with cable ties and/or cable clamps to ensure that the weight of the cables is evenly distributed.

(4) Grounding. Install a No. 4/0 AWG insulated cable from the antenna patch panel cable grounding bar or building bulkhead plate to the facility earth electrode ground system. Grounding shall be in accordance with FAA-STD-019, Lightning Protection, Grounding, Bonding and Shielding Requirements for Facilities.

174. ANTENNA RF CABLE BULKHEAD PLATE.

Remote communications facilities that have relatively short coaxial cable transmission line runs between the building and the antenna tower or pole will use a coaxial cable bulkhead wall plate. The building coaxial cable feed through provides a means of feeding coaxial cables into the building. There are two general types of coaxial cable termination details within a RF transmission system as depicted in Figure 6-18a RF Transmission System Typical.

a. **Coaxial Cable Feed through Installation.** The typical coaxial cable feed through bulkhead plate is a copper plate installed on the building wall to support coaxial cable bulkhead adapters (type "N," jack-to-jack feed through, Amphenol No.90950, or equal) as shown in Figure 6-18b, Bulkhead Plate and Cable Termination Box. Type "N" male coaxial cable connectors shall be installed on interior patch RF coaxial cable. Watertight type "N" male coaxial cable connectors shall be installed on low loss RF cable. The type "N" bulkhead adapter shall be installed through the bulkhead. Ensure cable slack is available for future modifications and changes.

b. **Coaxial Cable Termination Box Detail.** At the antenna platform a water-tight strain relief is required as shown in Figure 6-18b. This method shown will provide an antenna connection point for an RF cable surge suppressor installation and a cable junction point.

(1) **Bulkhead Plate Grounding.** Connect the copper bulkhead plate to the earth electrode system with a No. 4/0 AWG cable in accordance with FAA-STD-019. See Figure 6-18 for an illustration of bulkhead plate grounding.

175. **RESERVED.**

176. **RESERVED.**

177. **RESERVED.**

FIGURE 6-18a. RF TRANSMISSION SYSTEM TYPICAL

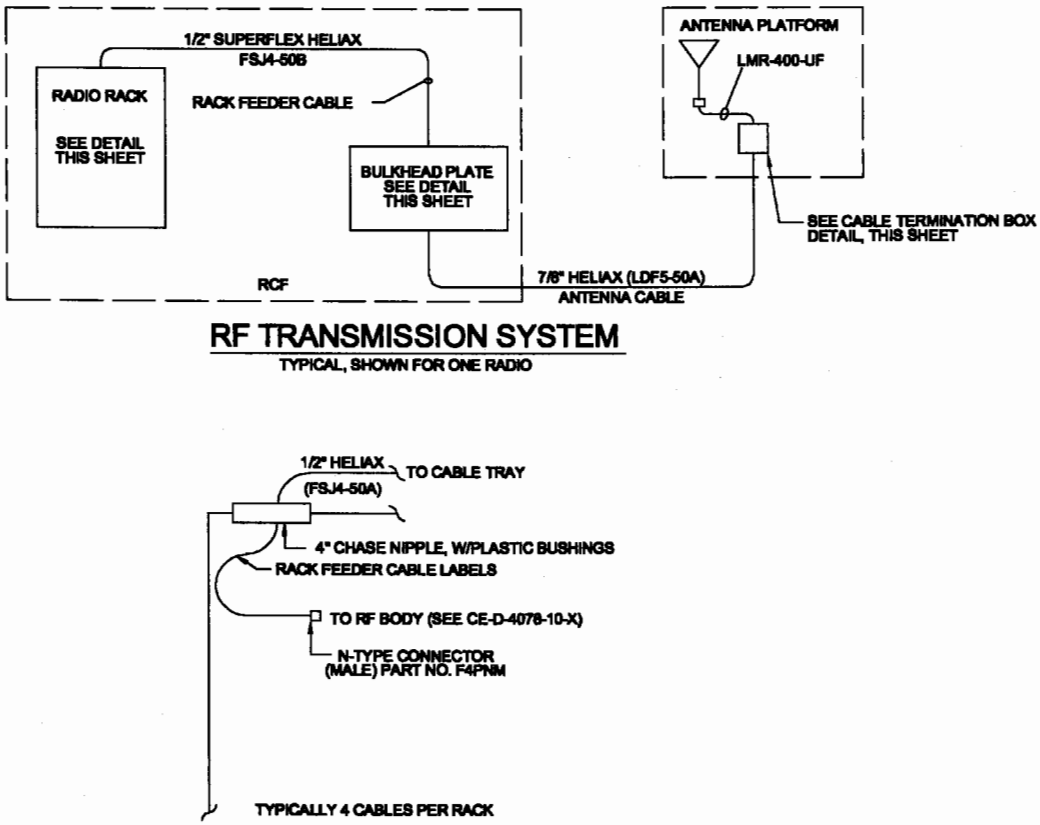

FIGURE 6-18b. BULKHEAD PLATE AND CABLE TERMINATION BOX

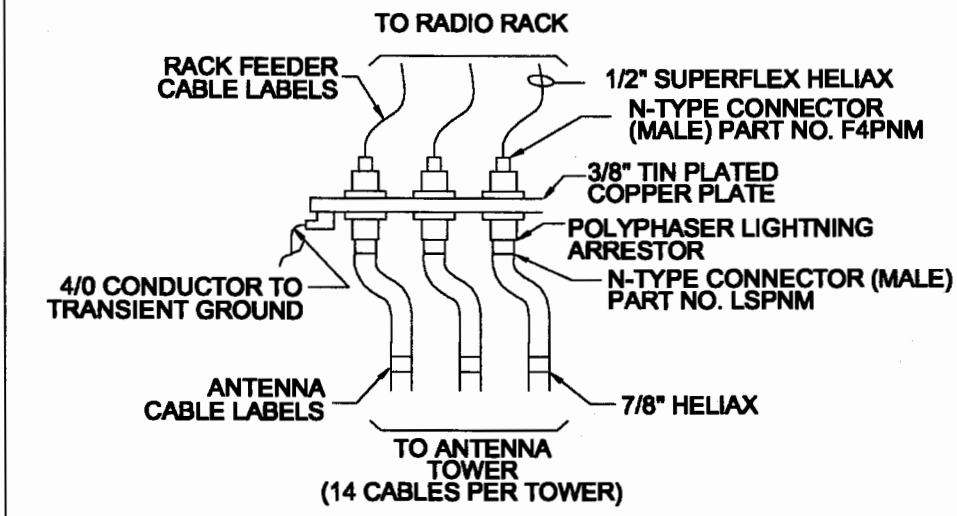

BULKHEAD PLATE DETAIL

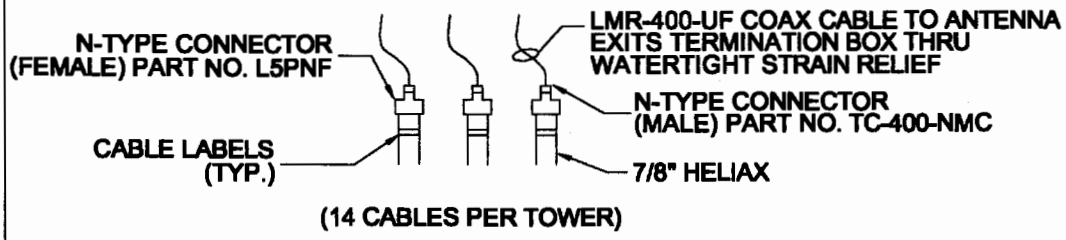

CABLE TERMINATION BOX DETAIL

NOTE: AT BOTH THE TOWER-TOP CABLE TERMINATION BOX AND THE BUILDING ENTRY BULKHEAD PLATE BOX, THERE SHALL BE AT LEAST 18" OF ALL 7/8" CABLES AVAILABLE ABOVE THE CONDUIT TO PERMIT RE-CONNECTORIZATION IF REQUIRED.

SECTION 5. ANTENNA SYSTEM INSTALLATION

178. DESIGN GUIDELINES AND REQUIREMENTS.

The following guidelines and requirements shall be used in the design of RCF antenna systems to minimize receiver desensitization and RF intermodulation; reduce antenna pattern distortion; provide lightning protection; and provide transmission line and antenna backup capabilities.

a. Antenna Coaxial Cable. Low loss double-shielded and/or solid sheath coaxial cable transmission lines shall be used for antenna coaxial cables. At least one spare coaxial cable transmission line shall be installed for each antenna tower. The shield and center conductor on all spare or not inuse coaxial cable shall be terminated directly to the nearest appropriately ground metal on both ends.

b. Antenna Junction Box. One antenna cable junction box shall be installed for each antenna tower or pole platform. This watertight enclosure enables coaxial cable type transition and spare cable substitution.

c. Antenna Spacing. Recommended spacing between transmit and receive antenna towers is 120 feet, which provides a free space path loss of approximately 46 dB at VHF and 54 dB at UHF frequencies. Path losses minimize interference in receivers by attenuating transmitted sideband energy. Some existing towers are spaced 80 feet apart. The additional 3.5 dB isolation gained by 120 feet separation must be justified if spacing changes are to be made. Although T/R adjacent operation is not recommended, minimum spacing of 8 feet is recommended between adjacent transmit, receive, or T/R antennas. Spacing transmit antennas at least 8 feet apart reduces generation of intermodulation products within adjacent transmitters. Antennas in groups, like those mounted on ATCT and AFSS building roofs, shall be separated as much as possible within the available mounting space. Spacing antennas less than the 8 feet minimum may require additional RF filtering devices such as notch or bandpass filters to minimize interference.

d. Antenna Configuration. Both single and stacked VHF and UHF antennas are used in antenna system configurations. Stacked antennas reduce the number of support towers required, but stacking shall be consistent with good design and site operation requirements. Space between antennas in a transmit or receive group of antennas shall be 8 feet minimum. Transmit antennas shall be mounted on separate transmit towers when adjacent frequencies are separated by less than 1 MHz VHF or 2 MHz UHF and combiner cavities or other filtering will not prevent interference. If T/R antennas are required, they may be collocated on transmit or receive towers only if at least 8 feet antenna spacing and 1 MHz adjacent frequency separation, VHF or UHF, are maintained. If intermodulation or receiver desensitization occurs, more filtering devices must be added or the antenna must be relocated to eliminate the interference.

e. Air Terminals and Other Conductive Elements. Air terminals and other conductive elements shall not be located within 8 feet of any antenna element. All metallic sharp points within 60 inches of the air terminal shall be cut back or rounded to prevent corona discharge. See chapter 4, Figure 4-14, for a location illustration.

f. Grounding. A grounding conductor shall be installed from the antenna cable junction box grounding bar to the RCF earth electrode system via the tower down conductor. Some antenna manufacturers provide a ground stud at the base of their antennas. This stud shall be connected to a grounding down conductor. Grounding shall be installed in accordance with FAA-STD-019. See chapter 4, Figure 4-20, for a grounding illustration.

179. MAINTENANCE CONSIDERATIONS.

Mounting arrangement for the antennas and all associated equipment shall, whenever possible, provide a practical and safe means for one person, working alone, to switch coaxial cable antenna lines and to lower or dismount each antenna for maintenance service or replacement.

180. INTERFERENCE REDUCTION.

Utilizing the guidelines described in paragraph 178 for determining the antenna configurations will reduce antenna pattern distortion, receiver desensitization, and transmitter intermodulation. The following are more complete explanations of these sources of interference.

a. Antenna Pattern Distortion. In most applications, the desired antenna radiation pattern has circular symmetry moving outward from the antenna. Any conducting elements in the near field (8 feet) of the antenna may distort the pattern to some degree. Antenna pattern distortion can be reduced by increasing the space between antennas, air terminals, and other conductive elements, and by positioning the antenna configuration so that a metallic mounting structure causes minimum pattern distortion.

(1) Antenna Configuration Exceptions. There may be exceptions to why the antenna configuration is not satisfactory. The exceptions may depend upon the degree of antenna pattern distortion, the degree of receiver desensitization, the amount of transmitter noise and amount of intermodulation that exists at a given facility. An alternate antenna configuration will be considered, or filters and other interference control devices will be added at a facility to provide required antenna system performance.

b. Receiver Desensitization and Transmitter Noise. Receiver desensitization may occur whenever a transmit antenna located less than 120 feet from a receive antenna transmits on a frequency 500 kHz VHF or 1 MHz UHF from a receiver center frequency. T/R antennas must maintain a frequency separation of 1 MHz VHF or UHF in any case. Transmitted signals can include

transmitter noise with interfering intermodulation products. Signal degrading effects of receiver desensitization and transmitter noise are minimized by maintaining adequate physical spacing and frequency separation between antennas and, when necessary, by the use of supplemental devices such as combiners and cavity or crystal filter.

c. Transmitter Intermodulation. Transmitter intermodulation occurs when two or more signals of different frequencies interact to generate interfering new frequencies known as intermodulation products. Transmitter intermodulation is more prevalent when large numbers of transmitting antennas are grouped together on towers. Transmit or T/R antennas involved in transmitter intermodulation interference should be moved or extra filtering may be required to reduce or eliminate the interference.

(1) Antenna Counterpoise Conductance. Transmit antennas mounted on buildings containing non-uniform metal surface junctions, such as an AFSS building roof, may cause intermodulation interference Seals where metal roof material joins other metal material near the transmit antenna can cause nonlinear conductance when the junction is oxidized or has a poor metal-to-metal bond. This condition will generate noise and intermodulation interference. When the problem is encountered, measures shall be taken to prevent interference by cleaning oxidized junction surfaces or bonding metal straps across suspect junctions.

181. INTERFERENCE RESOLUTION.

After the interference reduction methods described in paragraph 180 have been tried and found for one reason or other not to be suitable, bandpass and band rejection devices shall be considered. These devices can cause signal attenuation to the receiver and lower antenna output power for the transmitter. If these factors are considered, losses will be minimized.

a. Interference Reduction Devices. Cavity bandpass filter devices will aid interference rejection for both the transmitter and the receiver. The value of this device is limited by the interference amplitude since out-of-band rejection may not be sufficient to attenuate the offending signal or noise. Receiver interference will be attenuated by the use of a crystal bandpass filter at the receiver. This device is small enough to be placed in the coaxial cable path. It will attenuate out-of-band (outside of the 50 kHz bandwidth) interference by 40 decibel relative to 1 microvolt (dBm) or more. If a specific frequency is at fault, a notch or narrow single frequency crystal filter will be necessary.

b. Receiver Interference. On the transmitter side, interference creating sideband noise or sideband harmonic energy products will desensitize any "near-in-frequency" receivers. Cavity bandpass filters and/or cavity band reject filters will be used to minimize radiation of the interfering noise or harmonic. Close attention is required in selecting cavity filters since in-band attenuation may be significantly large and

expected out-of-band attenuation will occur further away from the frequency of interest than in similar crystal filter devices.

c. Combination of Devices. If an added filter does not reduce interference sufficiently, a combination of remedial devices must be used. Be aware that added devices can attenuate transmit and receive signals enough to impact a service volume. A ferrite isolator may be used in an interfering transmitter; however, an isolator can produce undesirable harmonics and may require additional narrowband filtering. Isolators minimize transmit sideband energy produced when energy from other transmitters or the transmitter's reflected energy enters the transmitter and mixes with the original frequency. Devices are illustrated in Figure 6-20, Typical Interference Reduction Devices.

182. FREQUENCY INTERMODULATION ANALYSIS.

Intermodulation analysis shall be coordinated with the service area and/or the FAA headquarters frequency management office. This office will coordinate computer analysis of potential harmonic, image, and intermodulation interference. An analysis shall be made of the assigned frequencies to determine if intermodulation products will cause interference problems.

183. STAND-ALONE RCF ANTENNA CONFIGURATION.

An antenna configuration for a stand-alone combined transmitter and receiver RCF is shown in Figure 6-21, Twelve Frequency Antenna Configuration. The site consists of two towers with the building between the towers. Tower separation of 120 feet and the use of 10 watt transmitters, combined with a minimum frequency separation of 500 kHz VHF and 1 MHz UHF, minimizes receiver desensitization. T/R antennas require a minimum of 1 MHz frequency separation for VHF and UHF.

a. Antenna Complement. The combined transmitter/receiver site may employ six VHF/UHF, UHF/UHF, or VHF/VHF transmit and six VHF/UHF, VHF/VHF, or UHF/UHF receive stacked collinear antennas.

b. Pattern Distortion. Antenna pattern distortion for tower mounted stacked collinear arrays may occur which can cause a variance in the manufacturer's predicted antenna pattern gain characteristics by as much as 4 dB. Pattern distortion and its effect on air traffic radio coverage shall be considered when selecting antenna mounting configurations.

FIGURE 6-20. TYPICAL INTERFERENCE REDUCTION DEVICES

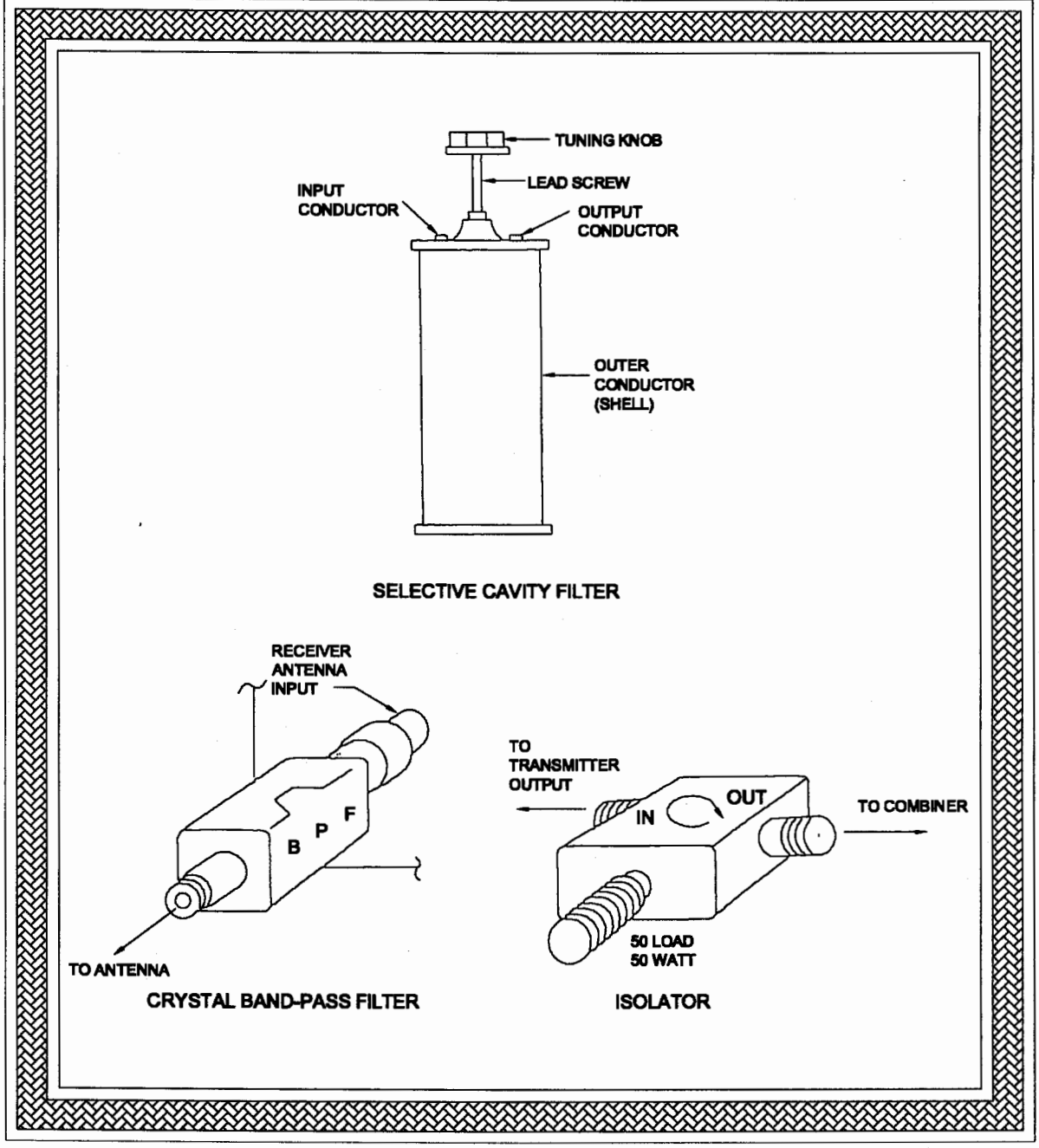

FIGURE 6-21. TWELVE FREQUENCY ANTENNA CONFIGURATION

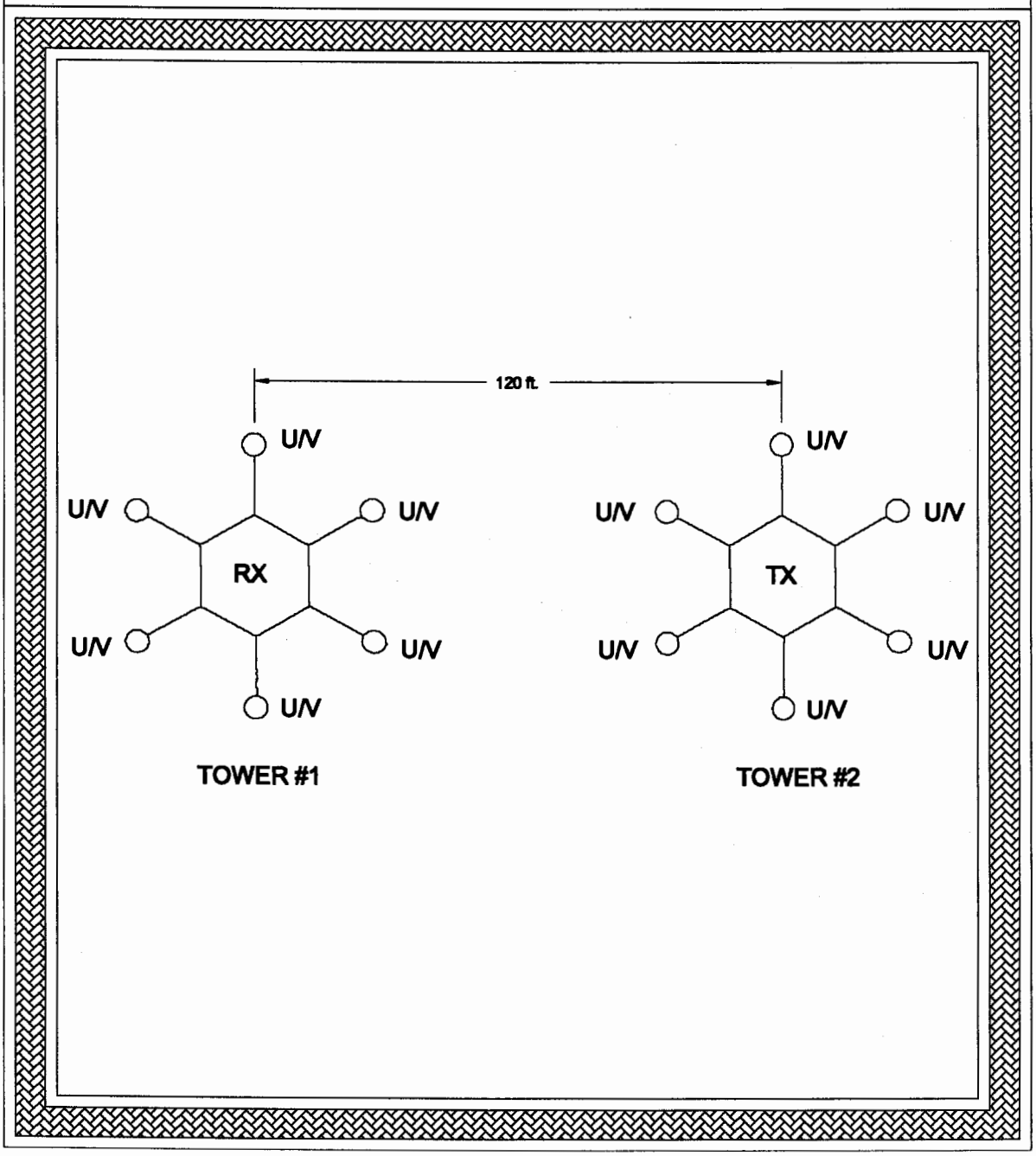

FIGURE 6-22. ANTENNA CONFIGURATION FOR RCF COLLOCATED AT AFSS

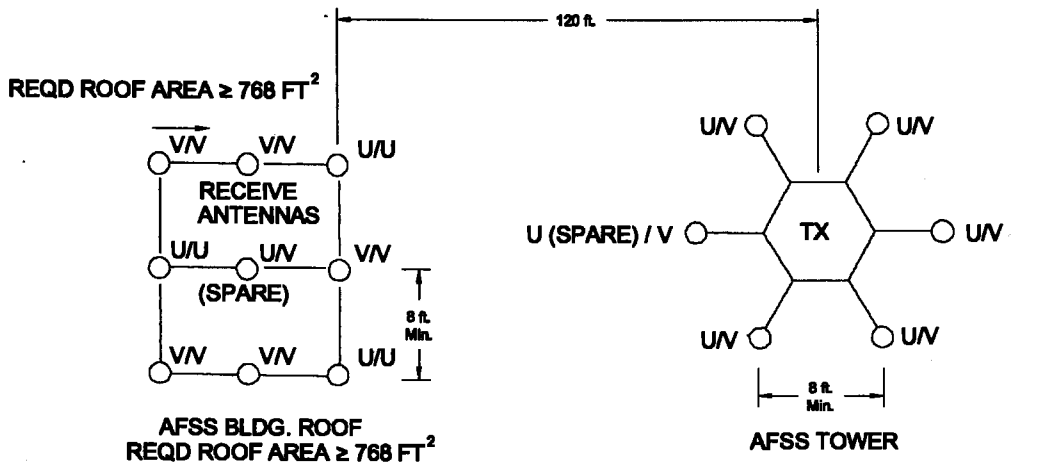

NOTE: V/U = STACKED VHF/UHF ANTENNAS

184. COLLOCATED RCF AT AFSS FACILITY.

A basic antenna configuration for a collocated RCF at an AFSS facility utilizing stacked collinear antennas is shown in Figure 6-22, Antenna Configuration for RCF Collocated at AFSS.

a. Receive Antenna Complement. The typical facility uses five VHF/VHF receiver stacked antennas, three UHF/UHF receiver stacked antennas, and one UHF/VHF receiver stacked spare antenna system located on the roof of the AFSS building.

b. Transmit Antenna Complement. The typical facility uses up to six VHF/UHF stacked collinear antennas mounted on a single tower. The transmit tower shall be located a minimum of 120 feet from the receive antenna tower.

c. Pattern Distortion. Pattern distortion may occur if the facility roof is made of conducting material and is not properly grounded. Pattern distortion for tower-mounted stacked collinear antennas may vary between 1 and 4 dB.

185. RCF COLLOCATED AT VORTAC.

The typical VOR with TACAN (VORTAC) facility utilizes antenna poles spaced 60 feet on a radius from the center of the VOR antenna array as shown in Figure 6-23, Typical RCF Collocated with VORTAC. The transmit and receive antenna poles shall be separated a minimum of 120 feet.

a. RCF/VORTAC Let-Down Pole Antenna Complement. The RCF collocated at a VORTAC host facility that utilizes let-down poles has two VHF/UHF stacked collinear elements at the lower cross-arm and two VHF/UHF stacked collinear elements at the upper cross arm. The cross arms shall be installed on a radial to the VORTAC. Refer to the Figure 6-31, Typical Service Center Supplied Let-Down Antenna Pole for an illustration.

b. Pattern Distortion. Horizontal spacing shall be no less than 8 feet between the VHF/UHF stacked collinear antenna elements. Antenna pattern distortion for the let-down poles may vary between 1 and 4 dB.

186. RCF COLLOCATED AT AN AIR ROUTE SURVEILLANCE RADAR.

The RCF communications antennas collocated at an ARSR facility can be mounted on the ARSR antenna tower. Each RCF site shall be evaluated separately, and antenna locations selected in accordance with local site conditions. This application is technically feasible but, is not encouraged due to numerous potential problems.

FIGURE 6-23. TYPICAL RCF COLLOCATED WITH VORTAC

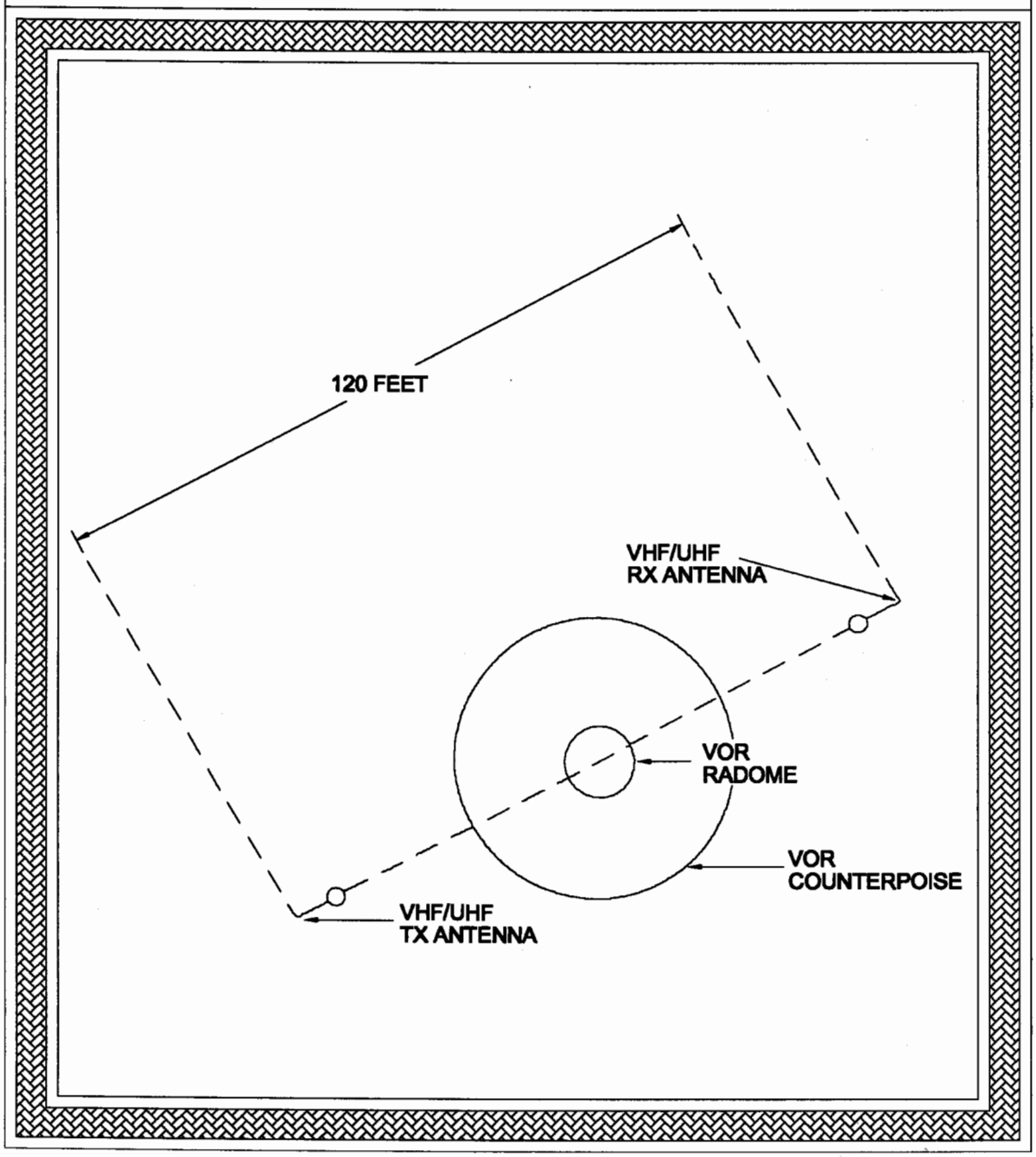

187. RCF FOR AN AIRPORT TRAFFIC CONTROL TOWER.

Recommended antenna configurations for ATCT facilities vary according to facility characteristics. It is recommended, but not required, that the RCF site be located a minimum of 1,500 feet from the control tower.

a. Antenna Configuration with Remote RCF. An ATCT may utilize a remote RCF site having stacked collinear antennas on both transmit and receive antenna towers. The RCF equipment building should be located mid-distance between the two towers. In this configuration, the potential for intermodulation product interference is entirely within the RCF site. Transmit and receive antenna tower separation of not less than 120 feet and the use of 10 watt transmitters minimize receiver desensitization from transmitter sideband noise. A 500 kHz VHF and 1 MHz UHF minimum frequency separation between channels shall be maintained for separate transmit and receive antennas. T/R antennas require 1 MHz minimum frequency separation VHF or UHF.

b. Antenna Configuration with Local RCF. The ATCT with a local RCF shall separate the receiver antennas 120 feet from the transmitter antennas by installation of a remotely located transmit antenna tower.

c. Antenna Pattern Distortion. Maximum pattern distortion for the lower antenna elements of a two-stack collinear antenna is generally higher than for single antennas. Analysis indicates that total pattern distortion at any lower VHF antenna position is less than 3.4 dB and for any upper VHF antenna position, less than 2.0 dB. Total pattern distortion at any lower UHF antenna position is less than 2.2 dB and any upper UHF antenna position, less than 1.4 dB. UHF pattern distortion values are for the UHF stack opposite the empty position (worst case) on an antenna platform. The lower UHF element adjacent to the empty position exhibits 1.0 dB pattern distortion, and the upper UHF element in the same stack exhibits 0.6 dB pattern distortion.

188. MATERIAL AND EQUIPMENT.

The typical RCF antenna site configuration shall consist of the following general materials and equipment. A more detailed configuration and materials list is shown in Figure 6-13 and Table 6-1.

a. Coaxial Cable. Low loss double-shielded or solid sheath coaxial cable shall be used in exterior cable installations at the RCF facility. Three types of RF cable: RF patch cable, low loss RF cable and very loss RF cable.

b. Coaxial Cable Junction Box. The coaxial cable junction box shall be installed on the railing of the antenna tower or pole platform. The junction will allow for cable transfers between active and spares.

c. Antenna Support Structures. The typical support structure for the RCF antenna system is a metal tower or a non-metallic antenna pole and platform. The type of structure used will depend on site requirements.

189. ANTENNA SYSTEM INSTALLATION SUMMARY.

Following is a description of the RCF antenna system installation procedure.

a. Site Survey. An installation site survey shall be performed to verify the material and tool requirements for the antenna system installation. The survey results identify types and quantities of materials; wiring provisions and requirements; access to facility for equipment, tools, and installation personnel; equipment layouts; and documentation requirements.

b. Unpacking. Unpack and inspect all materials and equipment to be installed.

c. Antenna Tower /Pole Platform Location. Locate antenna tower/pole platform structures at the RCF/VORTAC sites in accordance with design guidelines and requirements. This type of tower configuration is used to cause the least impact on the antenna pattern of the VORTAC radio equipment.

d. Antenna Tower/Pole Platform Construction. Construct the metal antenna tower or the non-metallic antenna pole and platform in accordance with FAA Order 6510.7, Communications Antenna Support Towers.

e. Coaxial Cable and Junction Box Installation. Install the coaxial cable junction box on the metal antenna tower or the wood antenna pole and platform. Installation of coaxial cable from the RCF building to the antenna shall be either direct cable underground or overhead messenger cable support. The type of installation shall be determined by site requirements. Refer to Figure 6-30a, Typical Antenna Tower Coaxial Cable and Junction Box referenced in paragraph 195 for an illustration.

f. Lightning Protection and Grounding. Lightning protection and grounding shall be provided on all antenna support structures. See the chapter 4, Figure 4-18, Antenna Tower Grounding and Lightning Protection, illustration.

g. Antennas. RCF antennas shall be installed on the antenna tower/pole platform utilizing a mounting mast attached to the platform. The

mounting mast mates with the antenna mounting base. Refer to paragraph 197 for more illustrations.

190. UNDERGROUND INSTALLATION OF COAXIAL CABLE.

Burial of cable in conduit provides increased reliability over direct burial. Cables shall be buried in accordance with specifications in FAA-C-1391, Installation and Splicing of Underground Cables.

a. Cable Installation. A pulling compound shall always be used to reduce friction and avoid potential cable damage. The lubricant selected shall be compatible with the cable jacket. Soap-based lubricants are not recommended for polyethylene jackets as they may initiate stress cracking at some later date. Manufacturers of available compounds that are used with polyethylene jacketed cable include: Ideal Industries Incorporated (Aqua Gel), and American Polywater Corporation (Polywater J), or equal. Conduit shall be sealed and proper water drainage provided.

b. Conduit Installation. Conduit shall be installed to provide protection between the RCF building and tower/wood pole platform as shown in Figure 6-24, Cable Protective Conduit Installation.

191. OVERHEAD INSTALLATION OF COAXIAL CABLE.

Overhead messenger cable support of RF coaxial cables between the RCF building and the antenna support structure shall be installed for short distances only (50 feet or less) and where trenching is impractical.

a. Installation of Messenger Cable Supported Coaxial cable. The messenger cable shall be installed as parallel to the ground as possible. At a VORTAC site, the messenger cable shall not extend above the VORTAC counterpoise level. The messenger cable shall be attached to the building wall coaxial cable bulkhead plate and to the antenna support structure as shown in Figure 6-18 and in Figure 6-25, Antenna Mast Messenger Cable Installation.

NOTE: Devices such as wind dampers and ice bridges shall be used in high wind and ice areas to protect the cable.

b. Messenger Cable Tension. The messenger cable manufacturer's recommended initial strand tensions shall never be exceeded. Strand and cable installation shall provide no more than 1.5 percent sag as shown in Figure 6-26, Messenger Cable 1.5 Percent Sag at 70 Degrees Fahrenheit.

192. RESERVED.

FIGURE 6-24. CABLE PROTECTIVE CONDUIT INSTALLATION

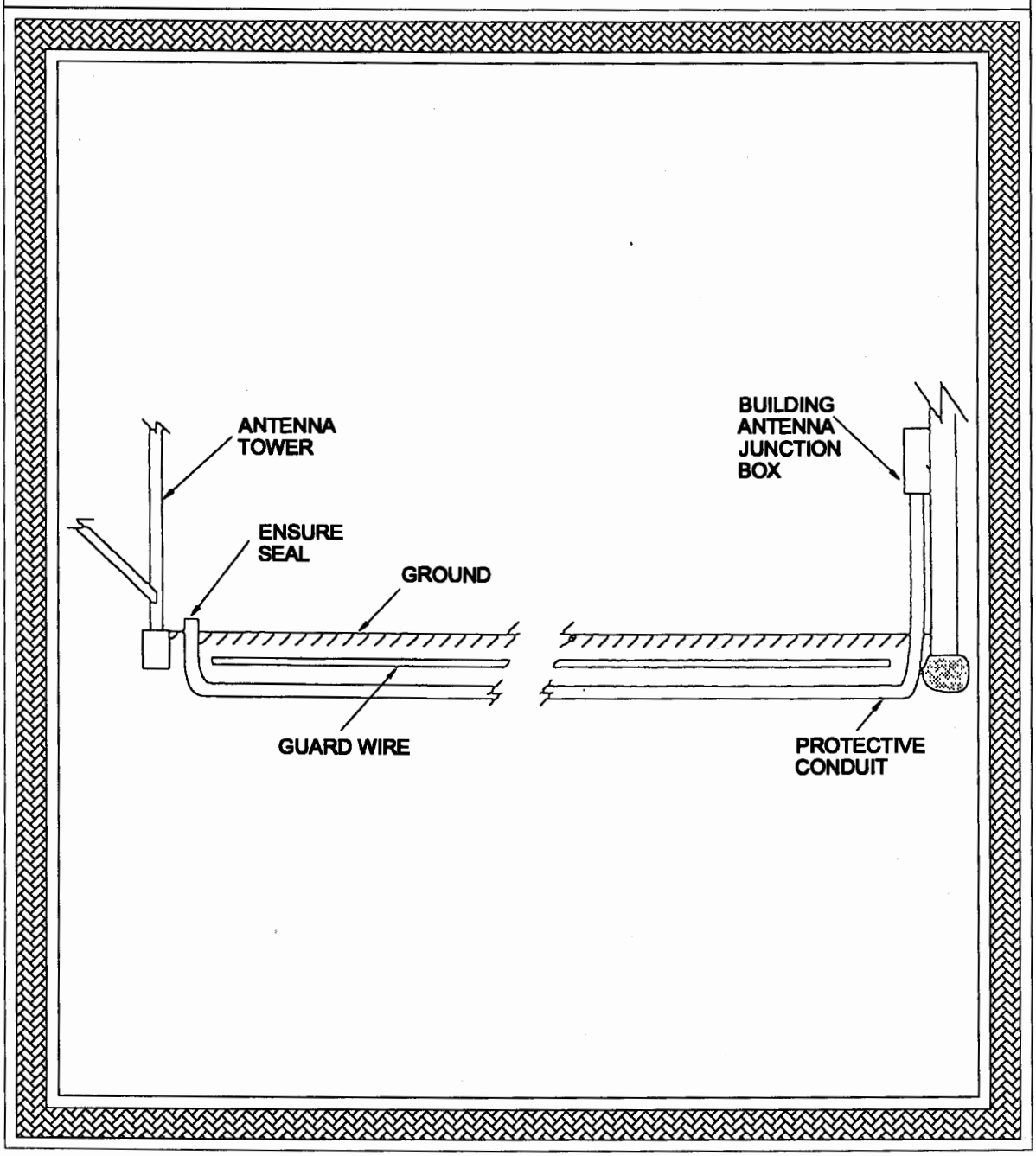

FIGURE 6-25. ANTENNA MAST MESSENGER CABLE INSTALLATION

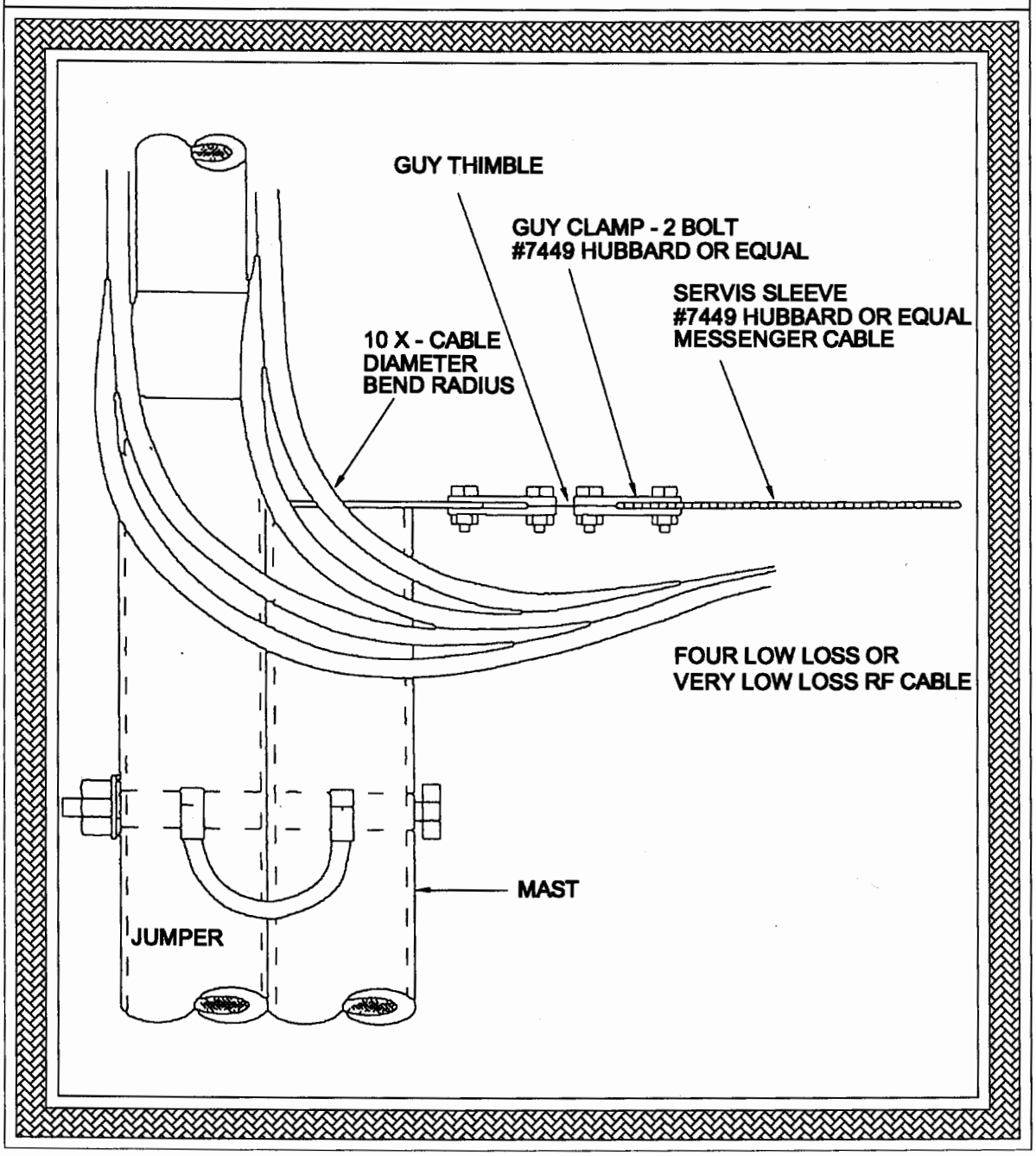

FIGURE 6-26. MESSENGER CABLE 1.5 PERCENT SAG AT 70 DEGREES FAHRENHEIT

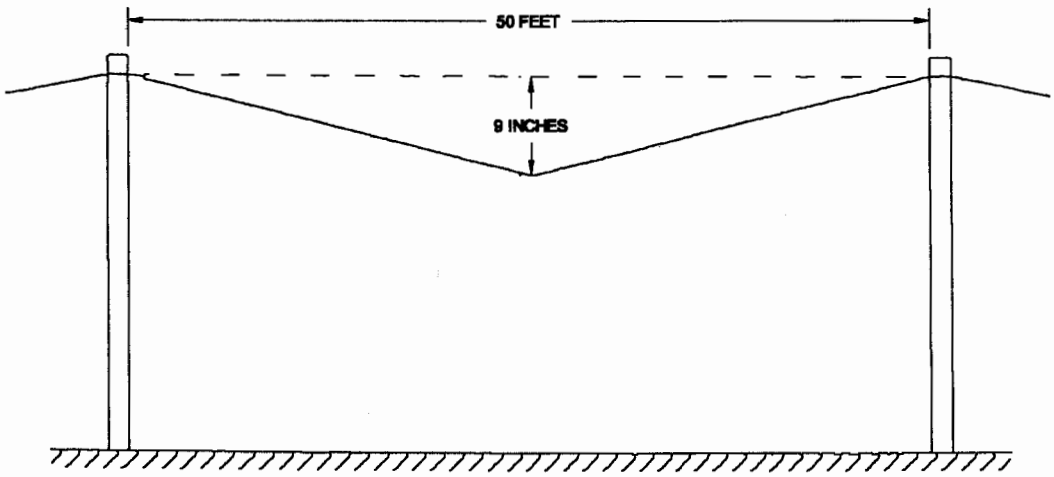

NOTE: NOT TO SCALE

SECTION 6. ANTENNA TOWERS AND POLES

193. METAL ANTENNA TOWER.

Metal antenna support towers are normally procured locally by the service area. The towers come in various heights and configurations, from 20 to 90 feet. Towers accommodate platforms with six swing-out mounts as shown in Figure 6-27, Typical VHF and/or UHF Antennas on Steel Tower. This configuration ensures 8 feet of separation between mounts. Since towers are procured in accordance with a performance specification, they may be provided in various configurations (triangular, square, and hexagonal).

a. Area Service Ordering Procedure. If no national contract for ordering towers is provided to service areas then local purchases will have to be provided.

b. Antenna Support Arm Change. The antenna support brackets on most communications antenna support towers will not support the stacked version of VHF and UHF antennas. This is due to over stress caused by high winds and ice loading. The wind load, creating a bending force at the base of the antenna, may cause the horizontal bracket arm to fail. The horizontal bracket arm was modified and strengthened as shown in Figure 6-27. Refer to FAA Order 6930.26, Modify Antenna Support Arms on Communications Antenna Towers, for more details.

c. Lightning Protection and Grounding. Metal towers shall be provided with lightning protection and grounding in accordance with the latest FAA-STD-019 and as illustrated in FAA Standard Drawings Series D-6075. A typical metal antenna tower lightning protection and grounding installation is shown in chapter 4, Figure 4-14 and Figure 4-18a.

d. Antenna Tower Height. The standard minimum antenna tower height is 30 feet above average terrain. Greater heights are provided, as required, to overcome coverage restrictions due to shadowing by topography, buildings and trees. Towers with a height greater than 70 feet are designed with support guy wires. Towers can be designed to be self supporting structures when the height is under 70 feet. The exception to the latter is when the tower base has a small supporting frame. Support guy wires will be required. Refer to manufacturer specifications.

e. UHF Antenna Height. Consideration must be made to tower heights that support UHF antenna, since a smaller Brewster angle (single angle of incidence versus the reflected angle) is experienced, exhibiting deep nulls in communication effectiveness. Towers height should generally be lower then VHF tower heights in the range of 20 to 40 feet. Appendix 6 provides more detail in determining antenna tower heights.

FIGURE 6-27. TYPICAL VHF AND/OR UHF ANTENNAS ON STEEL TOWER

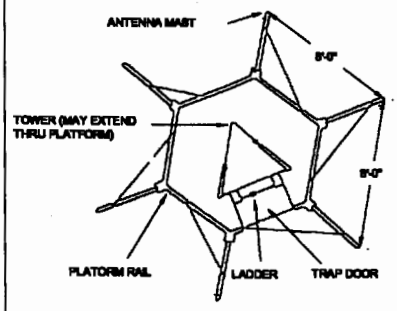

PLAN

SHOWING GENERAL ARRANGEMENT OF ANTENNAS ON HEXAGONAL TOWER PLATFORMS

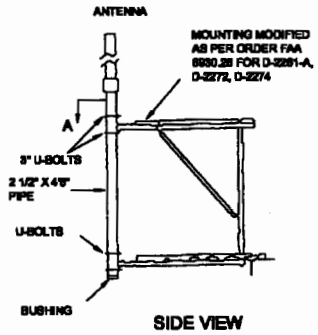

SIDE VIEW ANTENNA MOUNTING

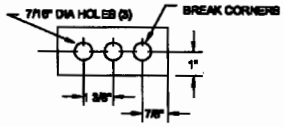

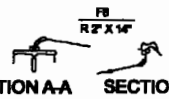

SECTION A-A SECTION B-B

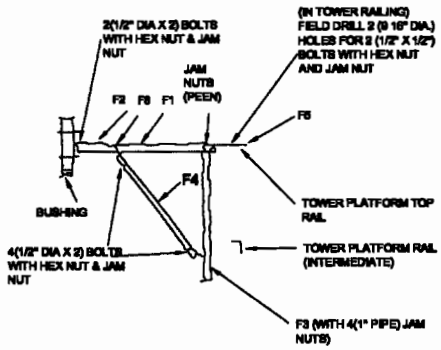

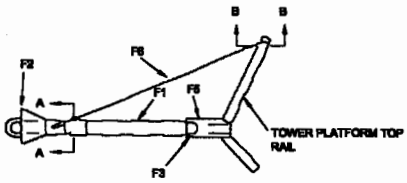

TOP VIEW

WITH ANGLE PLATFORM RAILING (HEXAGONAL PLATFORMS)

PARTS LIST			
NO. REQUIRED PER			
TRANSMITTING ANTENNA	RECEIVING ANTENNA	DESCRIPTION	ANTENNA TYPE
1	1	ANTENNA SUPPORT BRACKETS TYPE AS8 MODEL-1	REFER TO DR D-5059
1	1	2-1/8 DIA X 1'6" STD PIPE	
		ALL PARTS TO BE GALVANIZED	
		BY CONSTRUCTION CONTRACTOR	

194. ANTENNA POLE AND PLATFORM.

Non-metallic antenna pole and platform construction should be used at host radio navigational aid mountaintop facilities to minimize signal reflections and shadowing that may be caused by metal antenna support structures. The platform height must not exceed navigational aid counterpoise height. A typical RCF site is shown in Figure 6-28, Typical RCF Antenna Pole Platform. Fiberglass antenna pole mounting as shown in Figure 6-31, Typical Region Supplied Let-Down Antenna Pole, may also be used in VORTAC facilities. Some sites experience long term high humidity causing a wet wood antenna pole "dielectric constant" to change by an order of magnitude. This change will affect VORTAC radiation patterns, as will snow and ice buildup. The application of this type of pole mounting shall be evaluated considering site location factors. Another tilt down tower having four antennas made by Jaquith Industries, Syracuse, NY has also been installed at remote FAA facilities as shown in Figure 6-31a. The tower is 40 feet tall and has two 4 feet cross arms providing 8 feet separation between antennas.

a. Structure and Antenna Orientation. Multiple antenna poles and platforms shall be aligned on a radial to the center of the VOR antenna array as shown in Figure 6-29, Typical VORTAC with RCF Antenna Pole Platforms. Multiple antennas mounted on a platform or cross arm shall also be aligned on a single radial to the center of the VOR antenna array.

b. Lumber. All lumber shall be seasoned Southern Pine, or Douglas Fir, No.2 grade, or better. All wood poles shall be pressure treated prior to assembly with a non-metallic, non-conductive preservative. All lumber shall be coated with two coats of non- metallic, non-conductive paint.

c. Lightning Protection and Grounding. Lightning protection and grounding shall be provided for antenna poles and platforms in accordance with the FAA requirements as shown in FAA Standard Drawing Series, D-6075. See chapter 2, Figure 2-9 for an illustration.

195. ANTENNA TOWER COAXIAL CABLE AND JUNCTION BOX INSTALLATION.

Installation of antenna tower/pole platform coaxial cable and junction box shall be as follows:

a. Antenna Tower Coaxial Cable Installation. An illustration of a typical metal antenna tower coaxial cable installation is shown in sheets one and two of Figure 6-30a, Typical Antenna Tower Coaxial Cable and Junction Box. Typical antenna platform coaxial cable conduit installation details are also shown in figure 6-30a. Cables shall be attached to support members at 3-feet intervals or as close as possible while allowing the cable to give with member movement. Cable moisture drip loops shall be provided where applicable.

FIGURE 6-28. TYPICAL RCF ANTENNA POLE PLATFORM

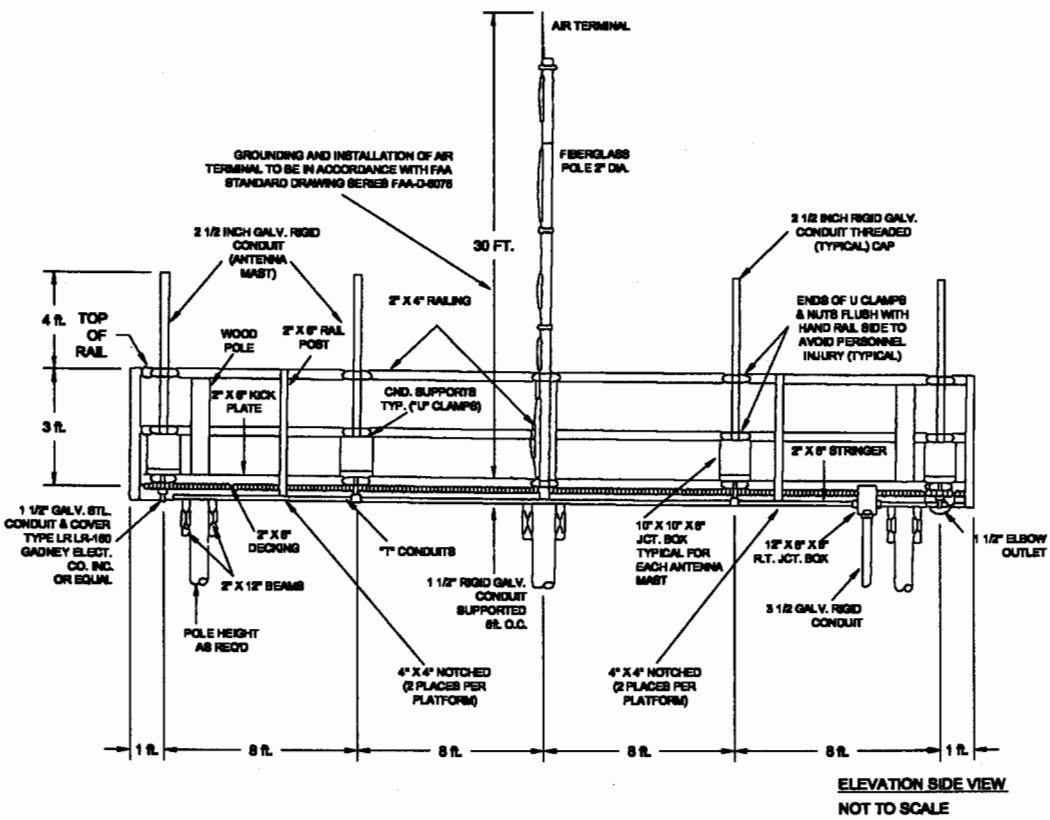

FIGURE 6-29. TYPICAL VORTAC WITH RCF ANTENNA POLE PLATFORMS

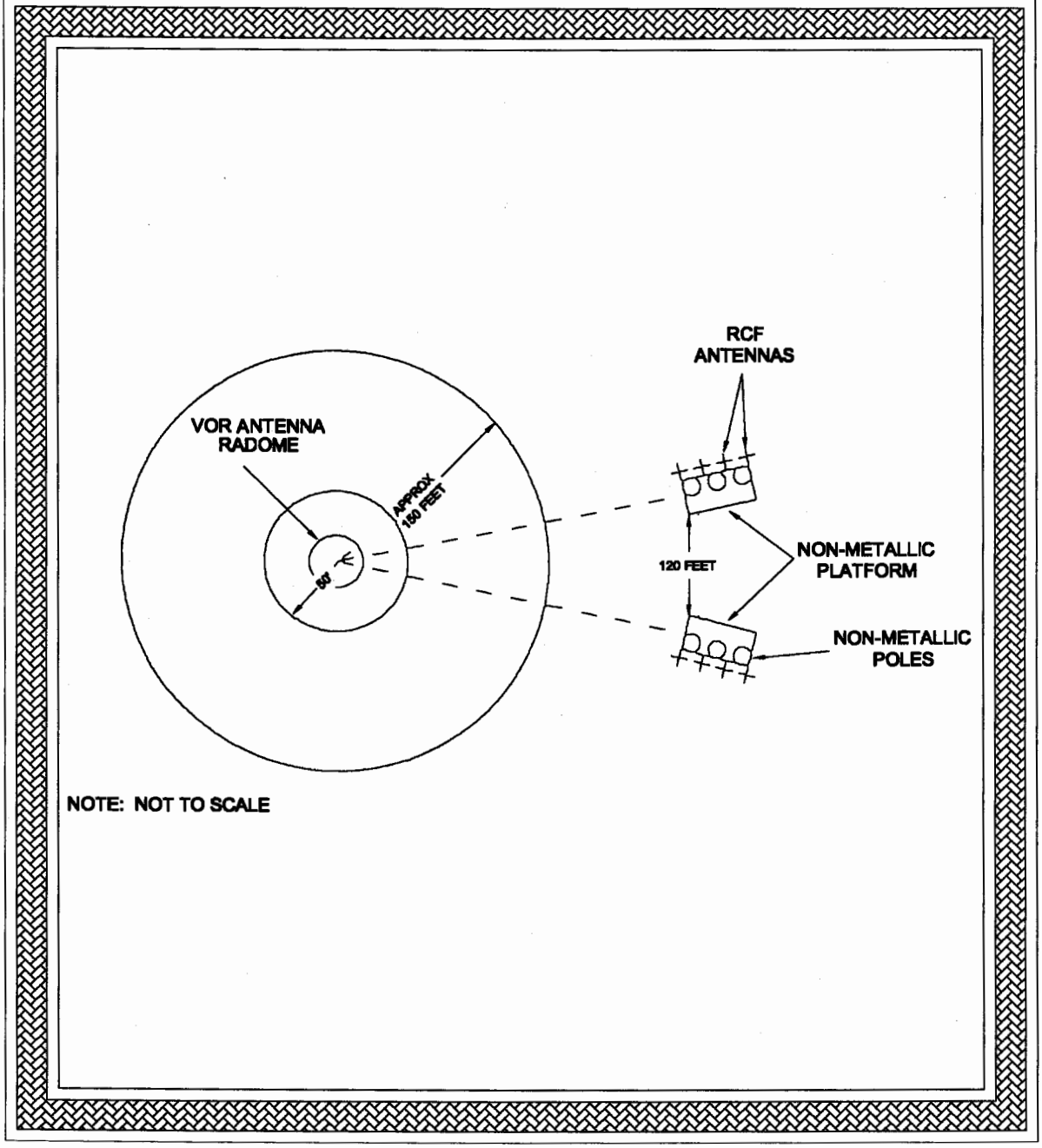

FIGURE 6-30a. TYPICAL ANTENNA TOWER COAXIAL CABLE AND JUNCTION BOX

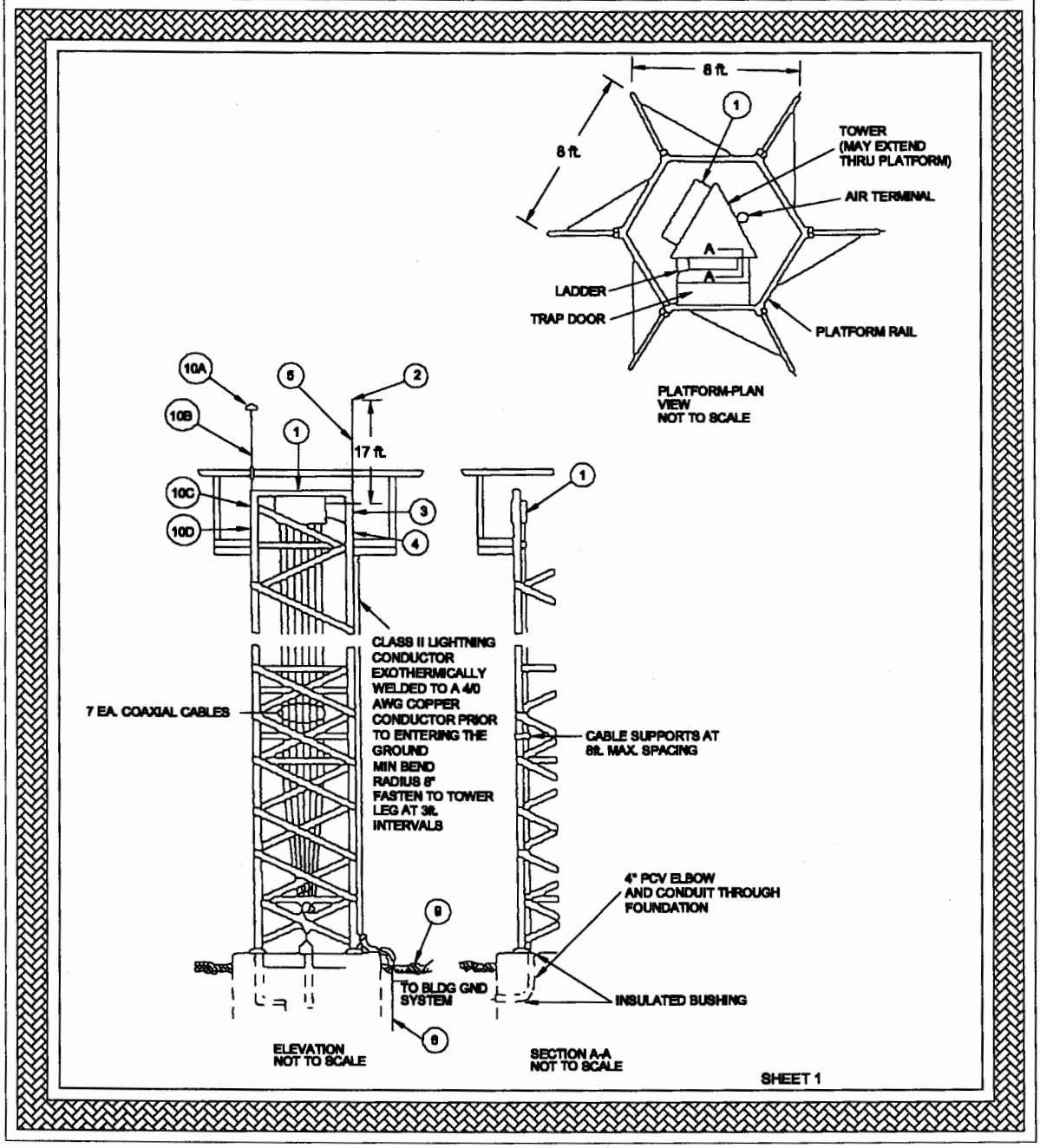

FIGURE 6-30b. TYPICAL ANTENNA TOWER COAXIAL CABLE AND JUNCTION BOX

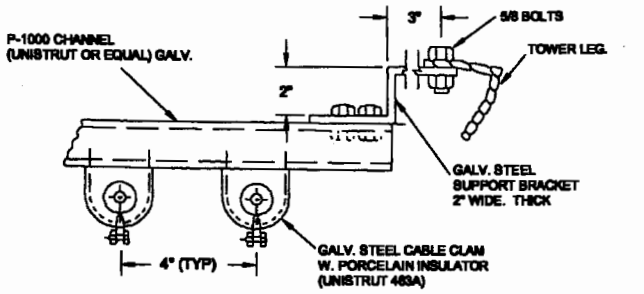

CABLE SUPPORT DETAIL
NO SCALE

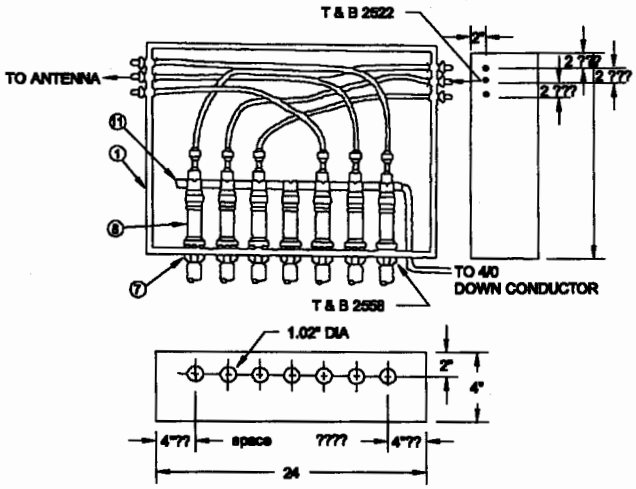

JUNCTION BOX
NOT TO SCALE

1. 24" X 20" X 8" DEEP WATERTIGHT JUNCTION BOX NEMA 12 (CIRCLE AW OR EQUAL). BOX TO BE SECURELY BOLTED TO TOP RAIL AND TO GALV. ANGLE IRONS.
2. AIR TERMINAL INSTALLATION IN THE CENTER OF THE TOWER. GROUNDING AND INSTALLATION OF THE AIR TERMINAL SHALL BE IN ACCORDANCE WITH FAA STANDARD DRAWING SERIES FAA-D-6075.
3. COPPER U-BOLT CLAMP (NO. 182, INDEPENDENT PROTECTION CO., OR APPROVED EQUAL).
4. 5/8" BRONZE SUPPORT BRACKET (NO. 67X. INDEPENDENT PROTECTION CO., OR APPROVED EQUAL.
5. 5/8"x8" COPPERCLAD GROUND ROD THREADED TO MATCH AIR TERMINAL TIP AND BASIC BRACKET.
6. 3/4" x 10" COPPERCLAD GROUND TOD TIES TO ANTENNA GROUND AND BUILDING GROUND WITH A 4/0 AWG BARE COPPER WIRE.
7. CONNECTOR, WATERTIGHT WITH LOCKNUT (TYPE T & B 2558 OR EQUAL.
8. BRING CABLES INTO PATCH BOX. LEAVE 2 FEET OF EXCESS CABLE AND MAKE ENDS WATERTIGHT WITH TAPE.
9. PROVIDE CONCRETE VALVE BOX WITH COVER. TO MAKE GROUND CONNECTION POSSIBLE FOR INSPECTION MARK BOX COVER "GND".
10. IF OBSTRUCTION LIGHTING IS REQUIRED.
    A. OBSTRUCTION MARKER LIGHT, DOUBLE FIXTURE, CROUSE HINDS TYPE EOL, OR EQUAL.
    B. 1" CONDUIT WITH THREADED END, EXTEND DOWN TOWER LEG AND THROUGH FOUNDATION.
    C. PHOTOELECTRIC CONTROL, CROUSE-HINDS TYPE PEC-4 OR EQUAL.
    D. GFI, 20A, 120 V, DUPLEX RECEPTACLE PASS & SEYMORE NO. 1591 OR APPROVED EQUAL IN WEATHERPROOF BOX
11. COPPER GROUND BAR WITH LUG IS SPECIAL MADE FOR SITE.

SHEET 2

b. Antenna Platform cable Junction Box Installation. The antenna tower or wood pole platform coaxial cable junction box shall be a weatherproof box installed on the railing of the metal tower or wood pole platform. This arrangement is shown in Figure 6-30b. The cable transitions shall be located at a convenient height to affect necessary cable transfers. A junction box will in some cases be mounted on an antenna let-down pole below the hinge.

c. Junction Box Cable Installation. Sufficient cable slack shall be available inside the junction box on the antenna side of the coaxial cables to allow connection in any transition. Appropriate strain relief connectors shall be installed where the cables enter the junction box as shown in the Figure 6-30a, Typical Antenna Tower Coaxial Cable and Junction Box illustration.

196. LET-DOWN MAST ANTENNA POLES.

The typical let-down mast antenna pole shall be fabricated and supplied by the regions. A typical letdown mast antenna pole is illustrated in Figure 6-31. The antenna support cross arms shall be aligned on a radial to the center of the array at a VOR site. This will minimize VOR far field course impact.

197. RCF ANTENNA MOUNTING AND GROUNDING.

a. Typical VHF and/or UHF Antenna Mounting. The typical VHF and/or UHF antenna mounting base is shown in detail A of Figure 6-32, Antenna/Mast Mounting Details. Detail B shows the mounting clamp which permits mounting on a 1.25 inch or a 2.50 inch mast. The clamp provides inline mounting with the mast, which allows feeding the antenna without exposing the transmission line coaxial connector. All installations may use a 2.50 inch support pipe.

b. Antenna Grounding. Grounding techniques differ among antennas. The outer conductor of both halves of each dipole of some antennas is at the same DC ground potential by design. A grounding lug is provided at the base of most antennas currently in use. A No. 4/0 AWG copper ground wire shall be used for attachment to the tower. Those antenna types that use the mount for grounding shall be mounted on a steel pipe. This pipe shall then be connected to the tower grounding down conductor.

198. RESERVED.

199. RESERVED.

FIGURE 6-31. TYPICAL REGION SUPPLIED LET-DOWN ANTENNA POLE

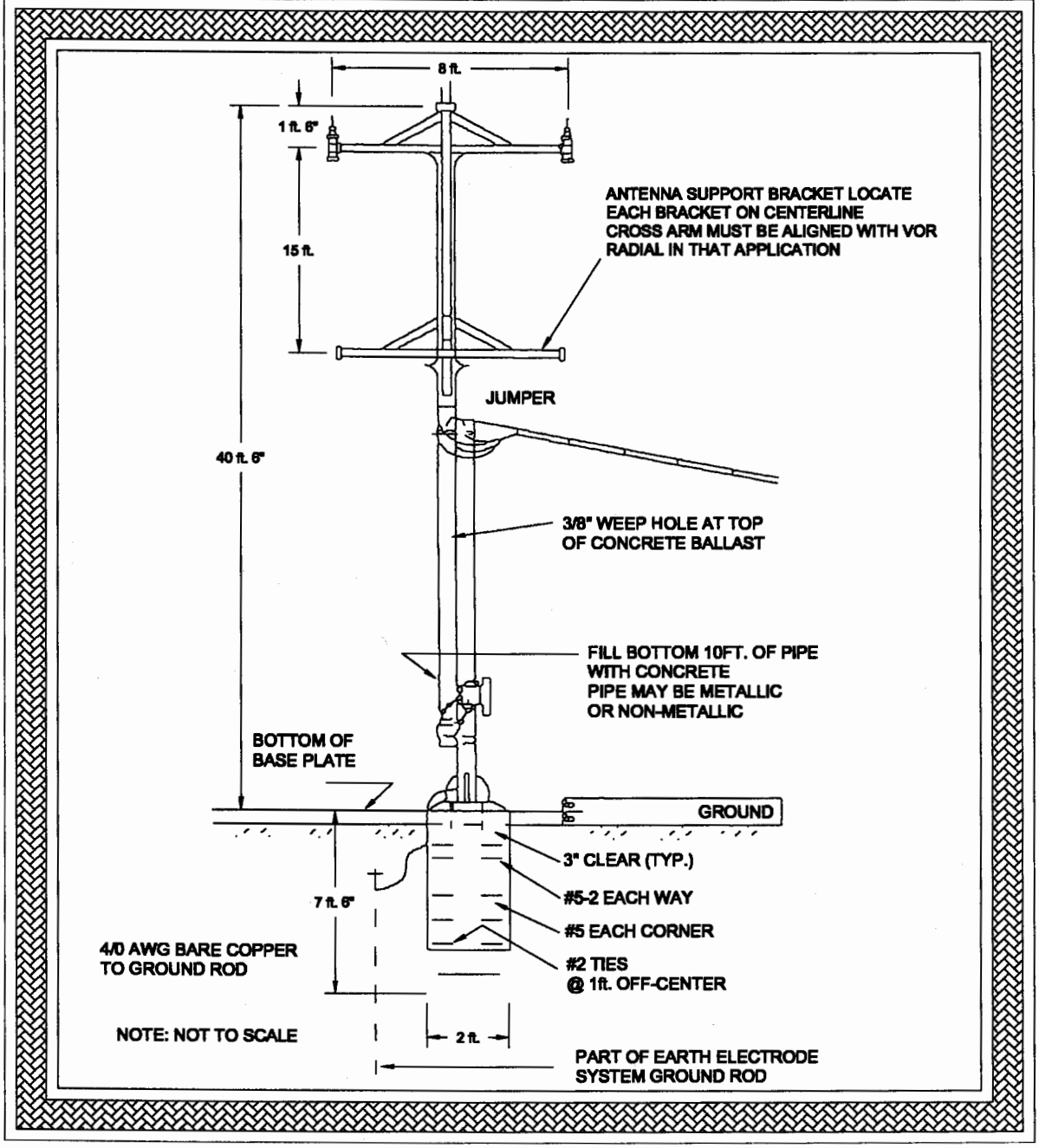

FIGURE 6-31a. JAQUITH INDUSTRIES LET-DOWN ANTENNA POLE

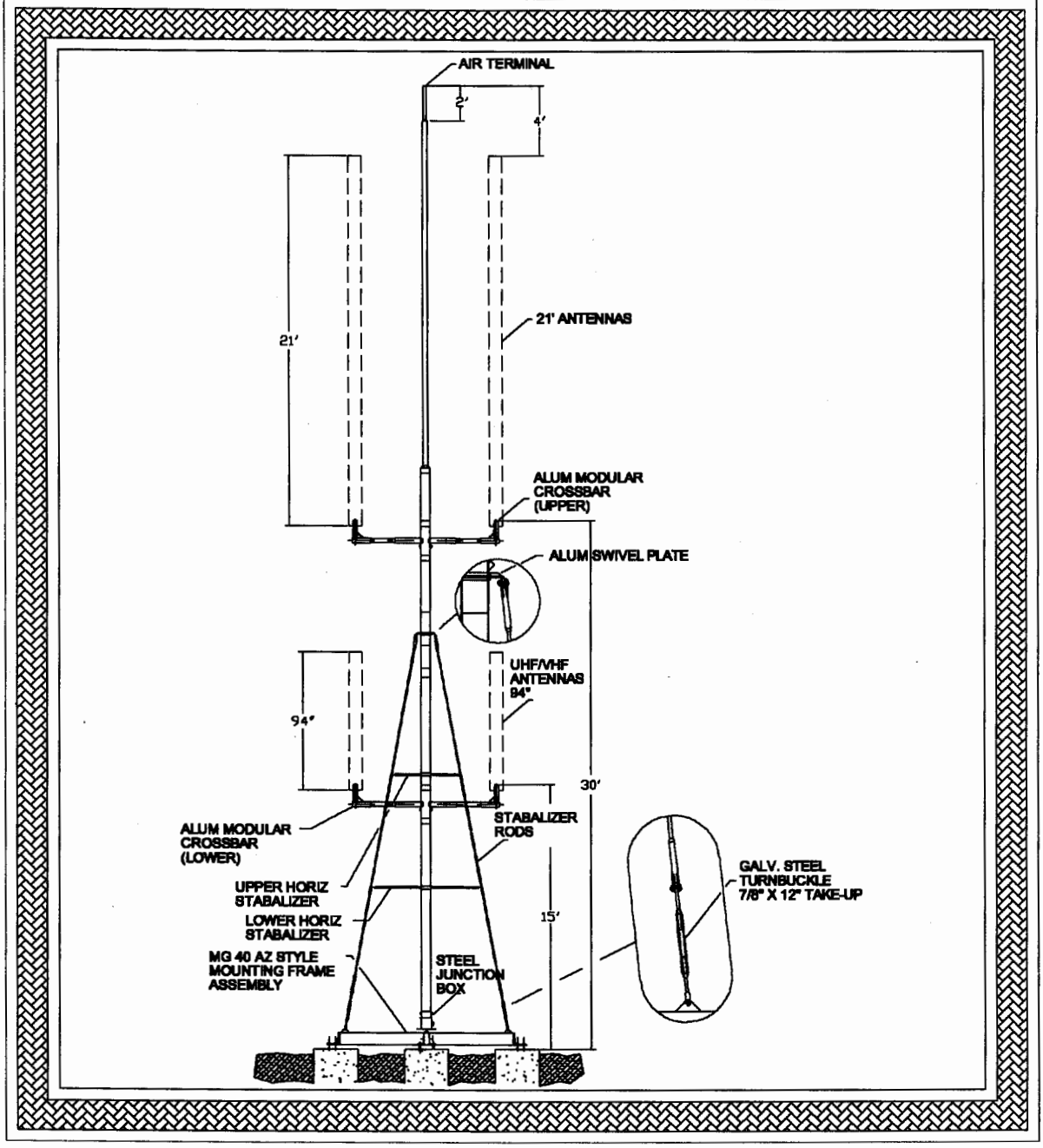

FIGURE 6-32. ANTENNA/MAST MOUNTING DETAILS

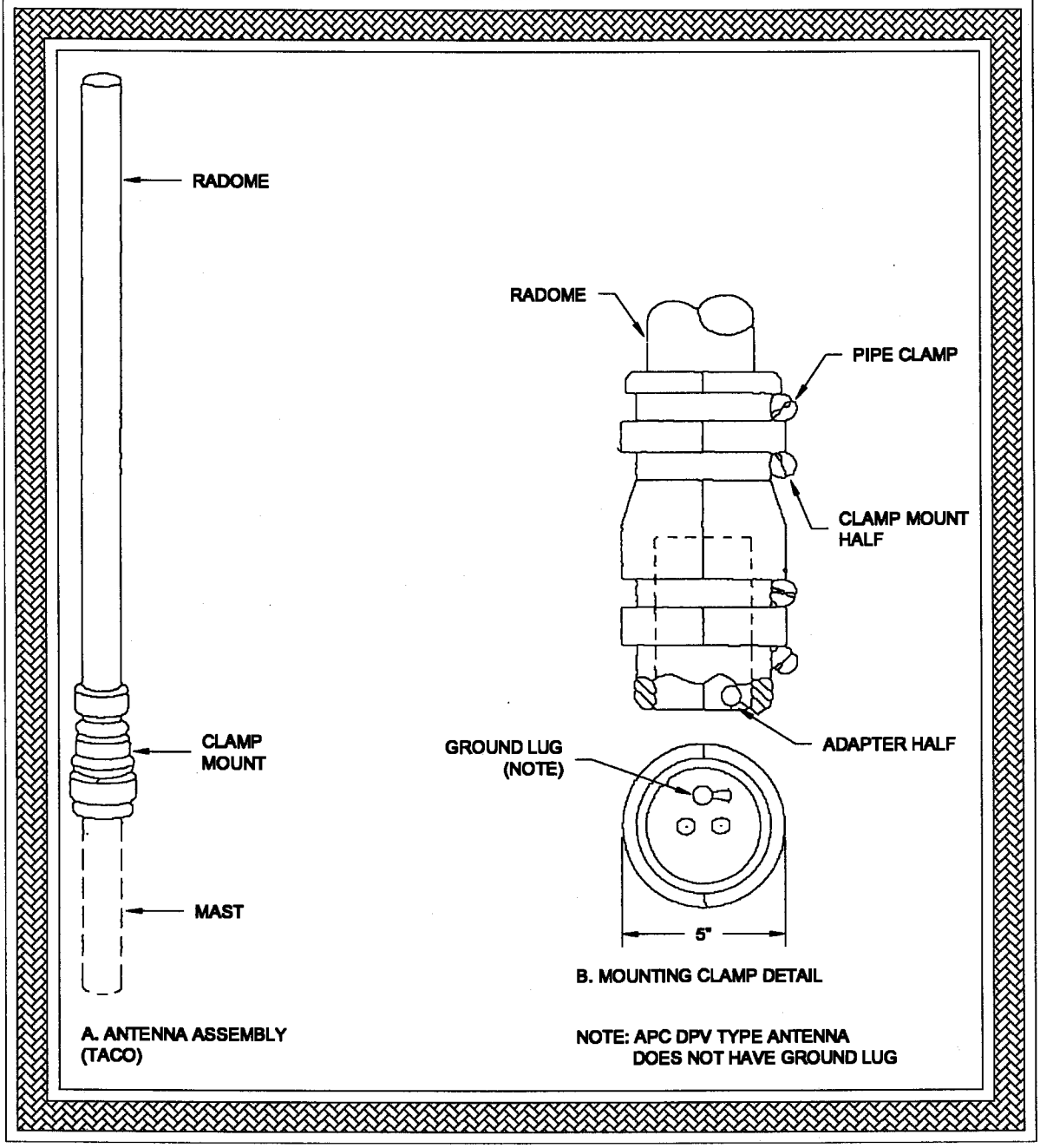

SECTION 7. BACKUP EMERGENCY COMMONICATIONS (BUEC) EQUIPMENT

200. INSTALLATION OF SITE BUEC EQUIPMENT.

The Back Up Emergency Communications (BUEC) A/G radios can be the Motorola CM-200 (UHF or VHF) and beginning in 2003, through the means of the radio replacement efforts, BUEC sites may also utilize the NEXCOM ITT CAVU-2100 VHF Multimode Digital Radios (MDR) and the new UHF CM-300/350 series radios. The CAVU-2100s and CM-300/350 series are the preferred radios of implementation. The CM-200 radio BUEC equipment rack configurations are no longer in production. Replacing the CM-200 racks are four (4) standardized NEXCOM BUEC equipment rack configurations, which support the CAVU-2100s and CM-300/350 series of radios. High power BUEC equipment racks (50 Watt configurations) will require forced air cooling. Low power BUEC equipment racks (10 Watt configurations) do not include fans. These configurations are provided in detail in Figures 6-40a, 6-40b, 6-40c, and 6-40d. The CAVU-2100 and CM-300/350 radios are packaged with slide rails, AC/DC power cords and the radio interface cable DSUB 15-pin cable by Newark, In. One P/N 7358865 is supplied and shall be used to provide a means for inserting, supporting, and removing the radios from the rack as identified in the figures above.

a. BUEC Electrical and RF Connections. Complete BUEC electrical and RF connections are described in their respective equipment instruction manuals. For the CM-200 transmitters please reference (VHF/UHF TI 6610.15A & TI 6610.16A); for CM-200 receivers please reference (VHF/UHF TI 6620.7A & TI 6620.6A), for the VHF MDR CAVU-2100 radios reference (TI 6610.4A) and for the UHF CM-300/350 radios refer to (TI 6610.20 TX & TI 6620.8 RX). The BUEC system may utilize one of the standard four (4) NEXCOM rack configurations or if implemented between 1996 and 2003 it could have a CM-200 rack. BUEC sites will implement a UHF/VHF antenna configuration as a regional choice. Refer to Figure 6-31a for a typical illustration. The BUEC system is similar to the standard RCF/Remote Center A/G Communications (RCAG) site equipment rack, however BUEC configurations do not require standby radios, since BUEC is a third level backup and only require commercial power (per 6950.2 code 4). An example of a BUEC antenna installation on a long-range radar antenna tower is illustrated in Figure 6-41, BUEC Antenna Location on Long Range Radar (LRR) Tower. A more typical installation, now that the tunable transceiver old BUECs have been replaced are separate racks in a collocated RCFs (e.g. RCAG/RCO/AFSS/ARTCC). Since December 2005, each sector now has its own individual BUEC.

b. Alternate Site Installations. Individual site locations are determined by air traffic requirements for service volume air-ground communications coverage. This requirement can place BUEC equipment at remote locations. The only requirements are the near access of electrical power and a nearby two-wire TELCO landline connection. Most site locations will be installed in a standard 19-inch rack within a facility and use the facility antenna system. In some cases the BUEC equipment will be mounted in a closet-like space outside. In this configuration the equipment will be

installed in a small weather proof lock-up type equipment enclosure on the ground as shown in Figure 6-42, BUEC Transceiver Stand-Alone Installation or with the same enclosure adjusted for mounting on a pole. The antenna tower can be steel or a non-metallic pole.

c. Individual BUEC site locations are determined by air traffic requirements for backing up service volume air-ground communications coverage. BUEC sites are required to have diversity with respect to the primary facilities electrical power, two-wire TELCO landline connections and physical location.

201. RESERVED.

202. RESERVED.

203. RESERVED.

204. RESERVED.

205. RESERVED.

206. RESERVED.

FIGURE 6-33a. NEXCOM BUEC 10W UV RACK

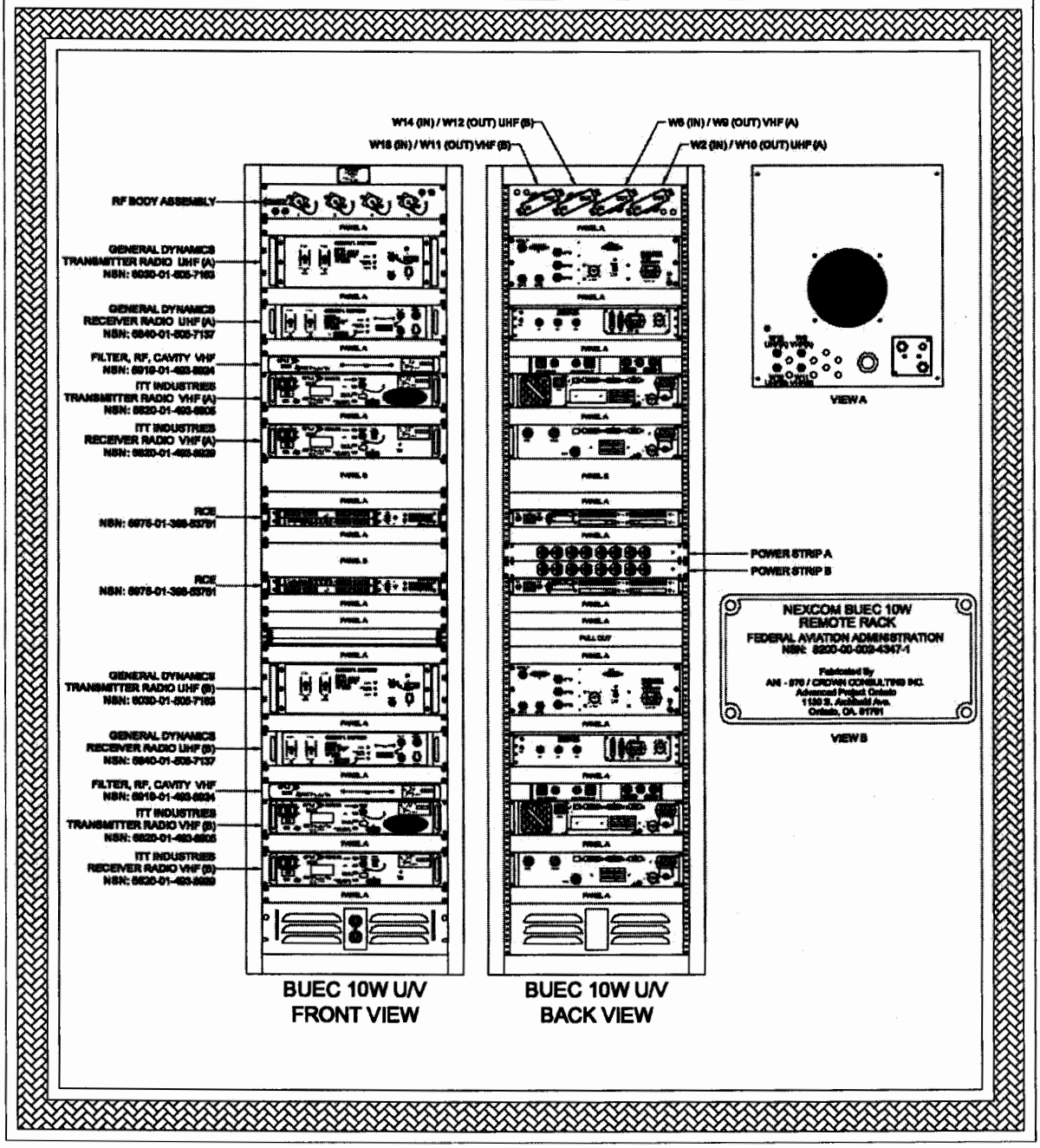

FIGURE 6-33b. NEXCOM BUEC 50W UV RACK

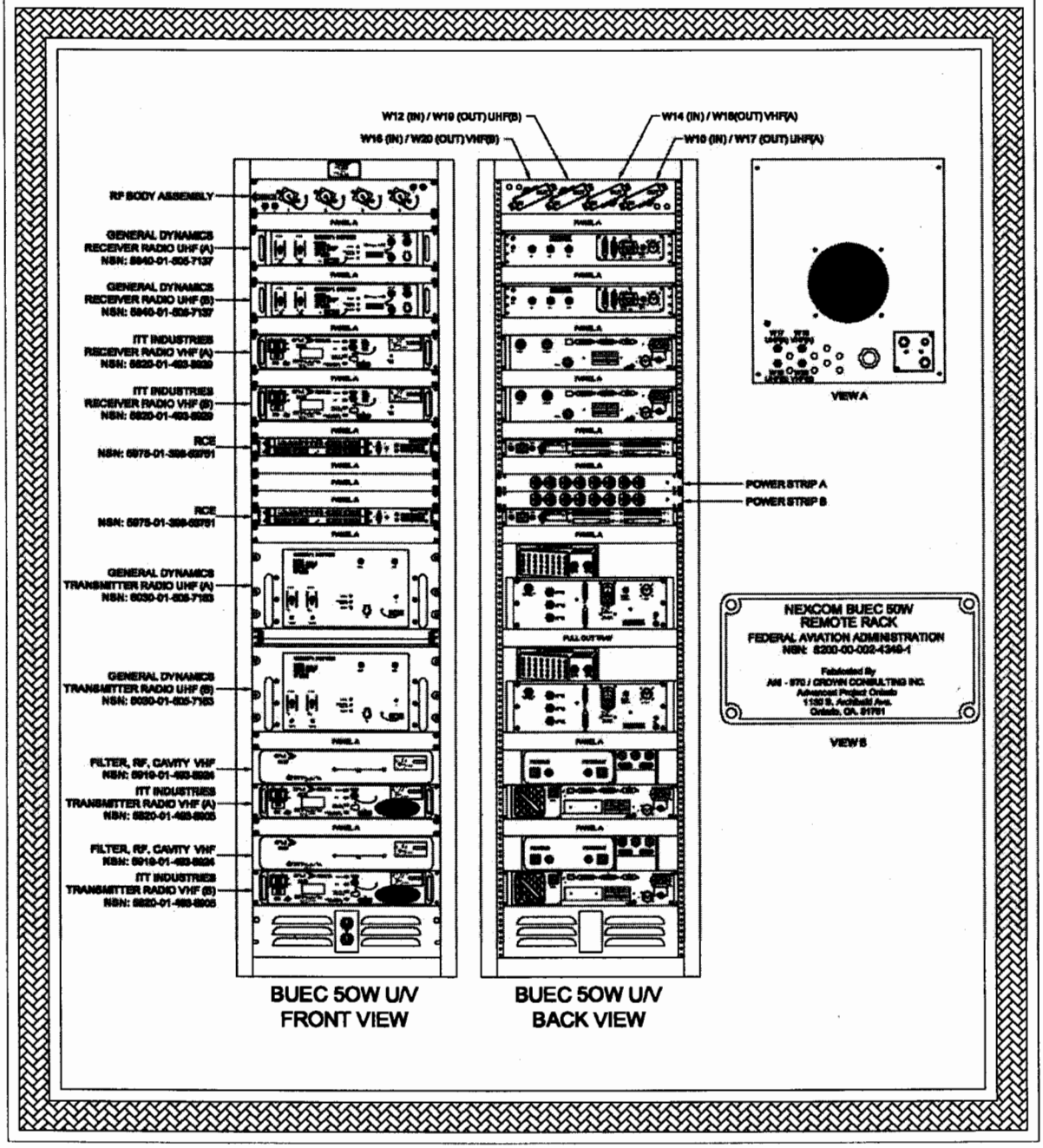

FIGURE 6-33c. NEXCOM BUEC 10W VU RACK

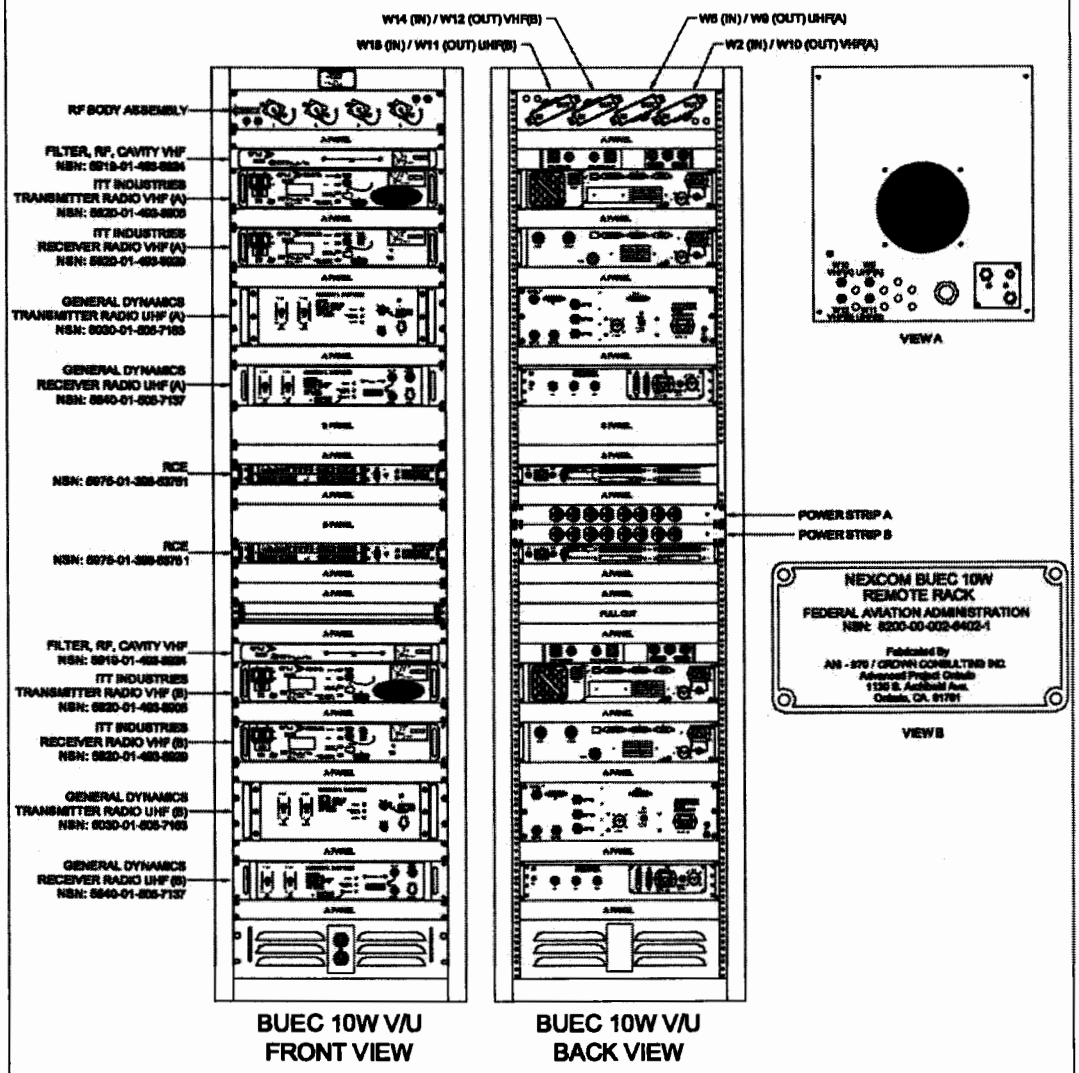

FIGURE 6-33d. NEXCOM BUEC 50W VU RACK

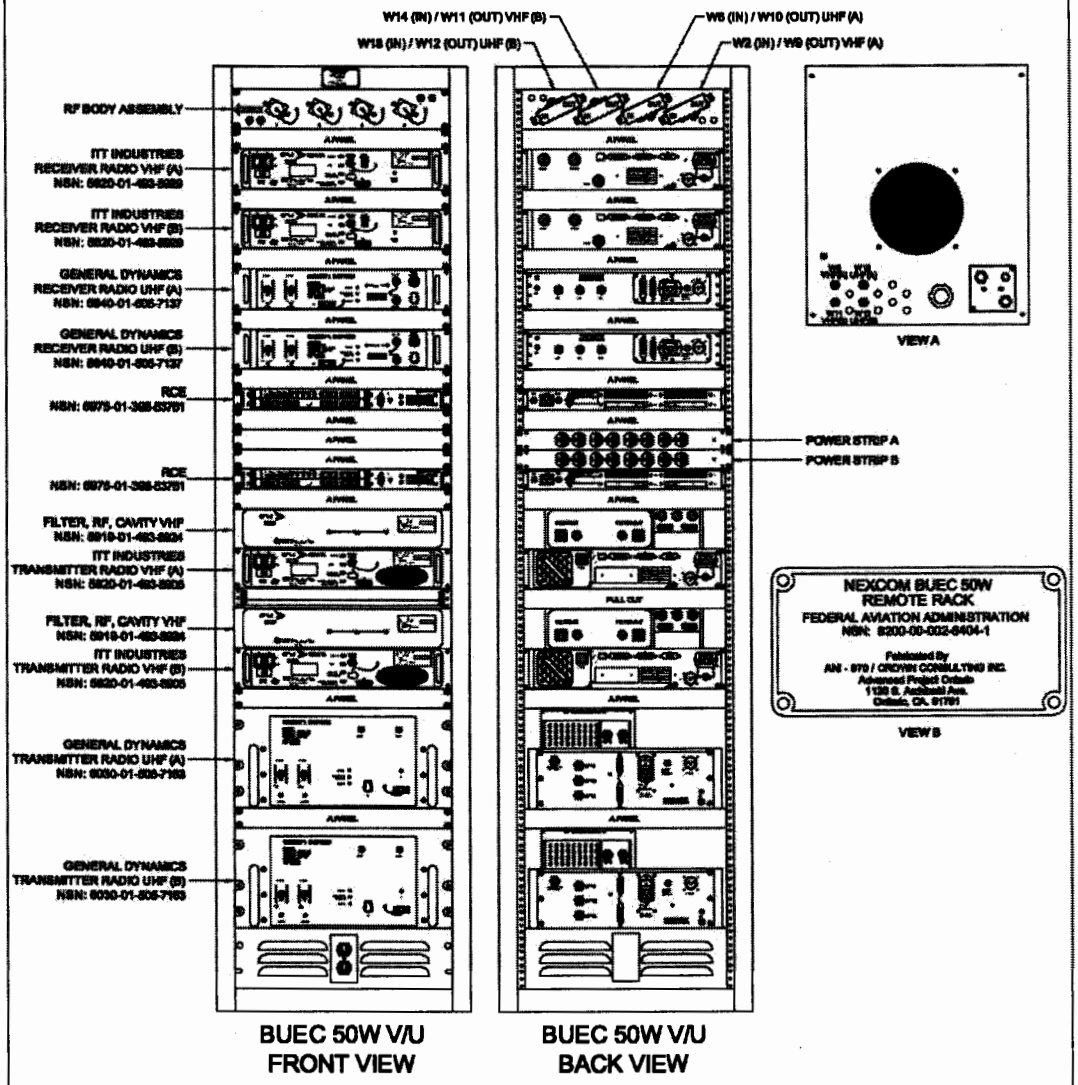

FIGURE 6-34. BUEC ANTENNA LOCATION ON LONG RANGE RADAR (LRR) TOWER

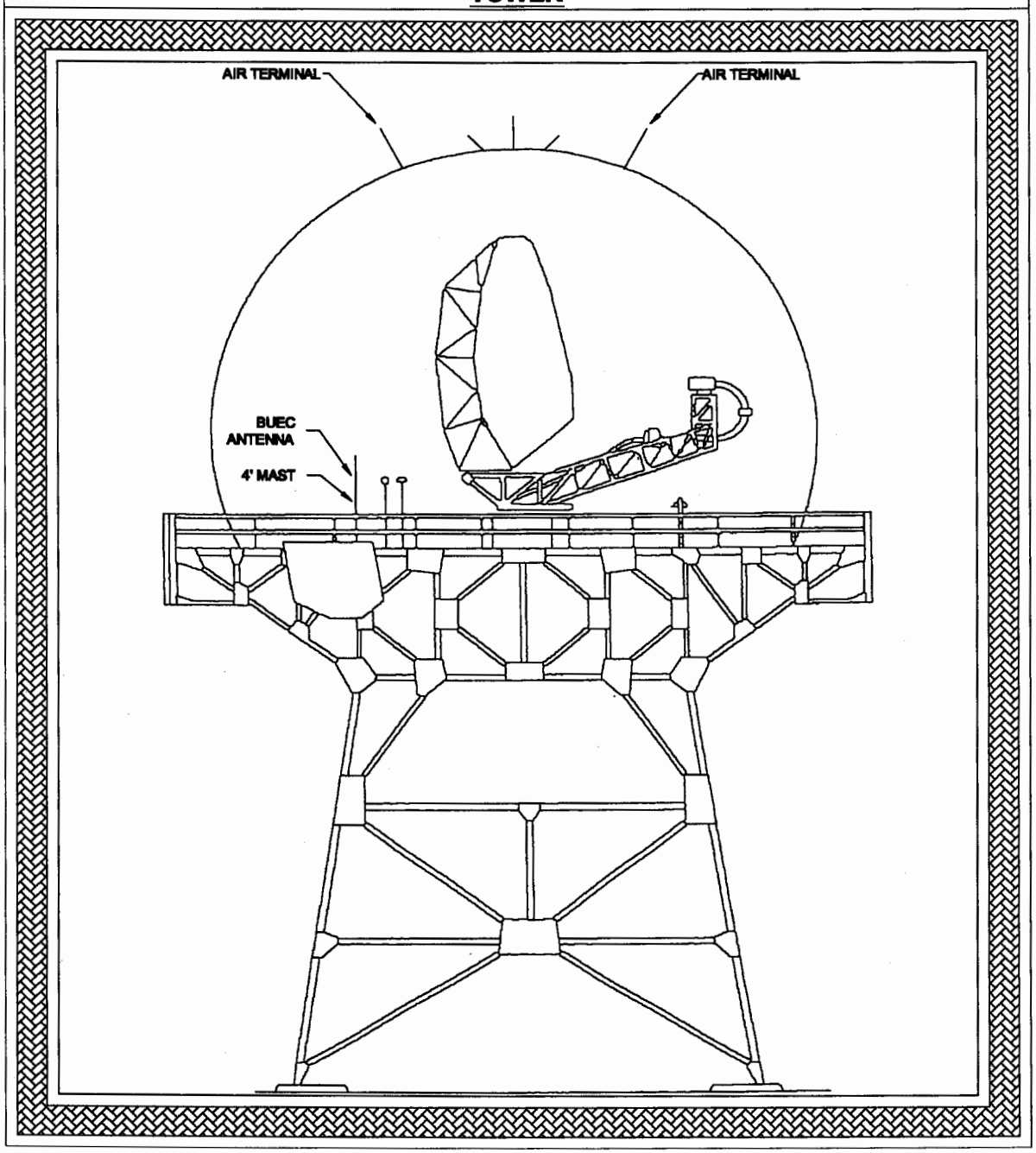

CHAPTER 7. SYSTEM TEST AND ACCEPTANCE

SECTION 1. EQUIPMENT ACTIVATION, TEST AND CHECKOUT

207. GENERAL.

This section describes the initial power up, checkout, and baselining of equipment at RCFs as part of the process associated with equipment relocation, commissioning a new site or service restoration. All equipment shall be activated and base lined for required operation as a separate task and will not be considered under system test.

208. COMMUNICATIONS EQUIPMENT ACTIVATION.

a. Transmitters and Receivers. The transmitters and receivers shall be tuned in accordance with RCF channel frequency requirements using procedures defined in the applicable equipment instruction manuals and maintenance handbooks.

b. Transmitter Combiner Cavities. The transmitter combiner cavities are factory tuned for a specific frequency; therefore, they should not require tuning. This tuning shall be checked and adjustments made for accuracy before system tests are begun.

c. Receiver Multicouplers. The receiver multicoupler circuits are broadband devices requiring no tuning. Refer to the equipment instruction manual and applicable orders if adjustment for unity gain is required.

d. Radio Control Equipment (RCE). The applicable RCE Software version will be uploaded via MDT or CMS. Site parameters will be applied as specified by site requirements. Site specific software data should be externally stored after all data entries are made.

e. Baseline Adjustments. Equipment baseline adjustments shall be accomplished in all RCF site communications equipment before system test begins.

209. BACKUP EMERGENCY COMMUNICATIONS EQUIPMENT CHECKOUT.

Make sure that the backup emergency communications (BUEC) equipment at the control point is installed and performing properly. The control point is an ARTCC location in most applications and requires coordination to checkout BUEC equipment installed in a remote site. When BUEC equipment is installed in a remote site the one for one backup frequency(s) shall be tested as for each frequency that is authorized. The BUEC transfer of the in-service equipment must be coordinated with the operation center and air traffic personnel. It is necessary at this time to arrange for a shutdown of the

frequency being tested. The following tests shall be accomplished prior to the commissioning of the BUEC system.

a. **Transmitter Input Audio Level.** Use required procedures for adjusting the landline levels between the ARTCC and the RCF to ensure compatibility with the landline interface of the RCF communications links. This procedure is described in the latest edition of FAA Order 6580.5, Maintenance of Remote Communications Facilities (RCF) Equipments and FAA Order 6500.9, Maintenance of BUEC Facilities. Verify that the primary communications interface is not degraded by the bypass relay in the audio transfer system.

b. **Landline Noise Check.** Landline noise levels in the audio bandwidth 300 to 3000 Hertz (Hz) shall not exceed current specifications as stated in FAA Order 6000.22, Maintenance of Two-Point Private Lines.

c. **Receiver Output Audio Level.** The receiver output audio level should be adjusted according to the appropriate Maintenance Handbooks (Blue sheets).

d. **Signal Losses.** In remote BUEC applications, signal losses in the audio bandwidth from 300 to 3000 Hz shall not exceed the specifications in section 3 of FAA Order 6000.22.

e. **Radio Communications Link (RCL) Audio Levels.** The RCL transmit and receive audio levels must be maintained within the range specified for the particular link used when the BUEC equipment is connected. The current version of FAA Order 6540.5, Maintenance of RCL Systems, shall be consulted and established tolerances observed.

f. **BUEC Documentation.** Complete all the initial performance and adjustment data entries on FAA Forms 6030-17, Transmitter, Receiver, Antenna, and Transmission Lines. This data shall be stored in the Facility Reference Data File (FRDF). This data is used for historical purposes and legal records. Redline all applicable changes to the BUEC and host facility drawings.

210. RESERVED.

211. RESERVED.

212. RESERVED.

213. RESERVED.

214. RESERVED.

215. RESERVED.

SECTION 2. SYSTEM TEST

216. GENERAL.

This section describes system tests to be completed before an RCF site is considered ready for system acceptance. The perspective taken will be from a newly completed site where no integrated functional system test has been completed. Restoration of a service will take advantage of the applicable part of the Joint Acceptance Inspection (JAI). This discussion will describe what areas and what tests shall be performed. Test methods and quantities shall be coordinated by the Project Lead. Alignment, functional tests, internal performance tests and channelization for all equipment such as transmitter, receiver, combiner, multicoupler, and radio control equipment are to be completed before system test begins. This section will cover the communication path input test through to RF carrier output test into the antenna. Refer to Chapter 6, Figure 6-1, RCF Electronic Equipment Block Diagram, as a general guide for what is to be tested. A communications facility test plan shall cover all equipment tests including power distribution under a separate heading. Complete all the initial performance and adjustment data entries on FAA Forms 6030-17. This data shall be stored in the facility reference data file (FRDF).

a. Alternating Current (AC) Power Test. Site primary power to the load distribution panel, facility electrical utilities lights, heating, cooling, and other accessories are part of the building structure. They will be separately tested and accepted under a separate facilities plan. Test of electrical distribution beyond the load center panel is implemented under a communications equipment test plan. This plan shall verify that AC power is delivered properly to installed equipment. The checks to be made for AC power are listed in subparagraphs (1) through (5).

(1) Commercial AC service voltage is present and measured at the input to the AC load panel.

(2) AC voltage shall be present and measured at each equipment rack with proper hot/neutral position on the outlet strip receptacle. Use a neon indicator type test plug and an AC voltmeter. Typical communications equipment supplied AC voltage in RCF sites are transmitters, receivers, multicouplers, RCE interface, DC charger, inverters and test equipments.

(3) Main equipment circuit breaker group shall be separate from standby equipment circuit breaker group and shall be verified. Refer to Chapter 5, Figure 5-3, Typical Reconfigured Single Phase AC Panel, and Figure 5-4, Typical Reconfigured Three Phase AC Panel for guidance.

(4) All convenience AC outlets (maximum groups of three outlets) in equipment racks shall be assigned to a separate circuit breaker.

(5) A record shall be kept for each circuit breaker correlated with the designation for each equipment or rack it is assigned.

b. DC Power Test. Some RCF sites are equipped with DC power to provide an alternate energy source. These sites will have a battery system and a battery eliminator/charger rack equipped with circuit breakers and a power distribution panel. The checks to be made for DC power are listed in subparagraphs (1) to (4).

(1) Expected 120 VAC should be present and measured at the input to the battery eliminator/charger.

(2) Expected 24 volts DC should be present and measured at each equipment rack requiring DC power with properly identified terminations and wire color (red for positive voltage wire and black for negative/return wire). The supplied DC radio equipment connector should be utilized and properly connected to the DC voltage. DC branch circuit shall not be connected to any ground termination.

(3) The main equipment circuit breaker group shall be separate from the standby equipment circuit breaker group.

(4) A record shall be kept for each circuit breaker correlated with the designation for each equipment or rack it is assigned.

c. Transmit Antenna System Test. RCF transmit antenna systems shall be tested for correct connectivity and VSWR. One of the transmitters connected to the antenna system will be used to test the selected antenna system. The RF line section mounted in the coaxial cable path with an appropriate indicator will be used to measure the antenna system performance. Local control of the transmitter shall be used with caution during this test to not interfere with other communications. In applications using combiners each of the four transmitters connected to the selected antenna system shall also be locally activated to verify their connectivity. Each transmit antenna system shall be tested using this or a similar approach. A record shall be kept for each transmit antenna system test performed indicating the designation for each system and the results of each test.

d. Receive Antenna System Test. RCF receive antenna systems shall be tested for correct performance and connectivity. The receive antenna selected will be temporarily connected to a transmitter RF line section output port for this test. The receive antenna cable will be disconnected at the transfer relay connection point or the output point of the multicoupler. Local control of the transmitter will provide an RF energy source to measure the receive antenna system performance. Each receive antenna shall be tested using this approach or similar approach. Receiver connectivity shall be tested by injecting an appropriate receiver frequency signal into the port where the receiver cable was removed above. A headset/speaker set will be

used at the receiver as an indication that a modulated RF signal is present at the antenna cable port. Each receive antenna shall be tested using this or a similar approach. A record shall be kept for each receive antenna system test performed indicating the designation for each system and the results of each test.

e. Communication Path Test. RCF facilities in most cases are connected to other facilities with diverse communication paths. Landlines or other communication links are terminated at the facility TELCO block and are tested and accepted separately. The communications equipment installation plan will complete the interior work to the RCE control end. When the installation is complete, each channel pair shall be tested and the results documented to verify connectivity from the communication termination block through the FAA demarc box suppressors or mini-demarc system to each RCE channel. Injection of a tone at the termination block individual pair with detection at the destination is a suggested verification technique. One pair is used for "transmit only" audio/signaling and one pair is used for "receive only" audio/signaling. A record shall be kept for each wire pair with correlation for each equipment or rack to which it is assigned.

f. RCE Control Test. Each RCF channel is equipped with an RCE. A verification test will be made from the landline termination block through the interface equipment to the RF equipment audio and control input or output connector. All RCE circuits will be checked for proper operation and proper tolerances. Refer to the equipment technical instruction books and FAA maintenance handbooks for more precise information and procedures. A record shall be kept for each channel RCE test correlating the designation of each equipment or rack to which it is assigned.

217. RESERVED.

218. RESERVED.

219. RESERVED.

220. RESERVED.

SECTION 3. SYSTEM ACCEPTANCE

221. General.

This section provides a brief description of acceptance events for a new or relocated site and service restoration.

222. CONTRACTOR ACCEPTANCE INSPECTION.

The CAI is an acceptance inspection between the TOR and the contractor that certifies the work accomplished by the contractor. Discrepancies found during this inspection are the responsibility of the contractor for correction. The contractor is relieved of obligation concerning the work after the CAI is signed.

223. JOINT ACCEPTANCE INSPECTION.

The JAI is an inspection required between the COTR/TOR and the Airway Facilities representative prior to the commissioning and/or return to service of an established, relocated, and/or collocated communications channel in accordance with FAA Order 6030.45, Facility Reference Data File.

a. Joint Acceptance Inspection Report checklist. The JAI report cover sheet and associated JAI report checklist are representative of data required for each RCF CAI and JAI. FAA Order 6030.45 provides further guidance and distribution requirements for the report.

b. Joint Acceptance Inspection Report Exceptions List and clearance Record. The JAI exceptions list and clearance record report list all exceptions from the JAI checklist and the status of each exception. All noted major exceptions must be resolved prior to the commissioning or restoration of service, provided that the exceptions do not violate existing applicable agency orders, technical instruction manuals, or accepted standard practices.

224. TECHNICAL REFERENCE DATA.

FAA Form 6030-16, Technical Reference Data Records Cover/Transmittal Sheet, and FAA Form 6030-17, Technical Reference Data Record, are used as representative documents to record the initial performance of all RCF facility systems and equipment. Instructions for completing the forms are contained in the current version of FAA Order 6030.45.

225. TECHNICAL PERFORMANCE RECORD.

The current version of FAA Form 6030-17, Technical Reference Data Record, is filled out in accordance with the current version of FAA Order 6000.15, General Maintenance Handbook for Airway Facilities, to indicate the initial

readings. The initial parameters to be recorded are identified in FAA Order 6580.5, Maintenance of Remote Communications Facility Equipment.

226. FLIGHT INSPECTIONS.

Flight inspections may be done to verify the operational performance of an A/G communications RCF facility. The instructions for flight inspection are contained in FAA Handbook OA-P-8200.1, United States Standard Flight Inspection Manual. The regions are encouraged to determine the initial coverage of each relocated and/or collocated communications channel. Portable regional or Washington headquarters-supplied field intensity evaluation equipment shall be used in an FAA, military, or rental aircraft. The measurements shall be related to a computer analysis for critical coverage distances and elevations in both VHF and UHF aeronautical frequency bands.

227. SITE CLEANUP.

The FAA or contractor electronics installation staff shall remove all packing boxes and other litter resulting from the installation work. It shall be the responsibility of the installation staff after the work is completed to ensure that all excess equipment and abandoned cables are cleared from the site.

228. RESERVED.

229. RESERVED.

230. RESERVED.

231. RESERVED.

232. RESERVED.

233. RESERVED.

234. RESERVED.

235. RESERVED.

APPENDIX 1. ACRONYMS

AC	Alternating Current
AMSL	Above Mean Sea Level
ADAS	AWOS Data Acquisition System
AFSS	Automated Flight Service station
AGC	Automatic Gain Control
AMPS	Amperes
ARSR	AirRoute Surveillance Radar
ARTCC	Air Route Traffic Control Center
ARTS	Automated Radar Terminal System
ASOS	Automated Surface Observing System
ASR	Air Surveillance Radar
ATC	Air Traffic Control
ATCT	Airport Traffic Control Tower
ATIS	Automated Terminal Information System
AWG	American wire Gage
AWOS	Automated Weather Observing System
A/G	Air-to-Ground
BPS	Bits per Second
BRITE	Bright Radar Indicator Terminal Equipment
BUEC	Backup Emergency Communications
CAI	Contractor Acceptance Inspection
CATEX	Categorical Exclusion
CIP	Capital Investment Plan
CM	centimeter
CMS	Centralized Maintenance System
CSTI	Communication Systems Technology, Inc
CU	copper
CWP	Corporate Work Plan
dB	decibel
dBi	decibel, Relative to an Isotropic Source
dBm	decibel relative to 1 microvolt
DBRITE	Digital Brite Radar Indicator Terminal Equipment
DC	Direct Current
DSP	Digital Signal Processing
EA	Environmental Assessment
EBS	Environmental Baseline Study
EES	Earth Electrode System
EDDA	Environmental Due Diligence Audit
EDS	Electrostatic Discharge
EFAS	EnRoute Flight Advisory System
EIS	Environmental Impact Statement
EIA	Electronic Industry Association
EMC	Electromagnetic Compatibility
EMI	Electromagnetic Interference
EMP	Electromagnetic Pulse Interference
EMT	Electrical Metallic Tubing
ERMS	Environmental Remote Monitoring Subsystem
ESD	Electrostatic discharge

ETA	Electronics Technician Association
FAA	Federal Aviation Administration
FCC	Federal Communications Commission
FL	Flight Level
FONSI	Finding of No significant Impact
FPSV	Frequency Protected Service Volume
FSK	Frequency Shift Keying
FSS	Flight Service station
FTA	Facility Transmitting Authorization
F&E	Facilities and Equipment
GCA	Ground Controlled Approach
GHz	Gigahertz
HDPE	High Density Polyethylene
HF	High Frequency
HPTH	High Power Top Hat
HVAC	Heating, Ventilation, and Air Conditioning
Hz	Hertz
IFR	Instrument Flight Rules
IM	Intermodulation
ITW	Illinois Tool Works
JAI	Joint Acceptance Inspection
kHz	Kilohertz
LB	Elbow Fitting
LPA	Linear Power Amplifier
MCM	One Thousand Circular Mils Cross sectional Area
MDT	Maintenance Data Terminal
MDR	Multimode Digital Radio
mho	mho (unit of conductance)
MHz	Megahertz
MIL	Military
MIL-STD	Military Standard
Mini-demarc	Miniature Demarcation Console
MT	Maintenance Terminal
M/S	Main/Standby
NAS	National Airspace System
NAVAID	Navigational Aid
NEC	National Electrical Code
NEPA	National Environmental Protection Act
NEXCOM	Next Generation Communications
NFPA	National Fire Protection Association
NIST	National Institute of Standards & Technology
NOTAM	Notice to Airmen
NTIA	National Telecommunications & Information Administration
PTC	Positive Temperature Coefficient
PTT	Push-to-Talk
PVC	polyvinyl Chloride
RCAG	Remote Center A/G Communications
RCE	Radio Control Equipment

RCF	Remote Communications Facilities
RCL	Radio Communications Link
RCO	Remote Communications Outlet
RCT	Remote Control Terminal
RF	Radio-Frequency
RFI	Radio-Frequency Interference
RLOS	Radio Line of Sight
RMM	Remote Maintenance Monitoring
RMMS	Remote Maintenance Monitoring System
RSL	Received Signal Level
RTR	Remote Transmitter Receiver
RX	Receiver
SAD	site Adaptation Data
SOP	Standard Operating Procedure
SPD	Surge Protection Device
SSC	System Support Center
STD	Standard
T&B	Thomas & Betts
TACAN	Tactical Aid to Navigation
TELCO	Telephone Company
TOR	Technical Onsite Representative
TRACON	Terminal Radar Approach Control
TVS	Transient Voltage Suppression
TX	Transmitter
T/R	Transmit/Receive
UHF	Ultra High Frequency
UL	underwriters Laboratory
US	United States
V	Volts
VAC	Volts Alternating Current
VDC	Volts Direct Current
VDL	VHF Digital Link
VHF	Very High Frequency
VODATA	Voice Data System
VOR	VHF Omni directional Range
VSCS	Voice Switch Communication System
VSWR	Voltage Standing Wave Ratio
W	Watt

APPENDIX 2. REFERENCES

In addition to equipment manuals, the following documents are referenced in this order. In each case the latest issue in effect at the time of issuance shall take precedence over the contents of this order.

1. FAA Specifications.

Number	Title
FAA-C-1217	Electrical Work, Interior
FAA-C-1391	Installation and Splicing of Underground Cable
FAA-E-2072	Cable, Telephone, Exterior
FAA-STD-019	Lightning and Surge Protection, Grounding, Bonding and Shielding Requirements of Facilities and Electronic Equipment

2. FAA Orders and Handbooks.

3900.19	Occupational Safety
4660.1	Real Property Handbook
6000.15	General Maintenance Handbook for Airway Facilities
6000.22	Maintenance of Two-Point Private Lines
6030.45	Facility Reference Data File
6050.32	Manual of Regulations and Procedures for FAA Spectrum Management
6470.29	Maintenance of En Route Air/Ground Communications Facilities
6480.4	Airport Traffic Control Tower Siting Criteria
6480.6	Maintenance of Terminal Air/Ground Communications Facilities
6500.9A	Maintenance of Backup Emergency communications (BUEC) Facilities
AF P 6500.19	Communications Facilities and Equipment Modification Handbook - General
6510.4	Radio Communications Requirements for Air Traffic Control Facilities
6540.5A	Maintenance of Radio Communications Link (RCL)
6580.5	Maintenance of Remote Communications Facility (RCF) Equipments
6600.6	Technical Performance Record
6610.3	Power Output Limitation: FSS, Terminal and Low Altitude En Route VHF and UHF Transmitters
6010.7	Joint Acceptance Inspection
6630.23	General Communications Handbook
6630.3	Antenna Configuration Handbook for Terminal and En Route Facilities

6630.5	Terminal Communications Installation Standards Handbook
6820.7	VOR Handbook
6930.26	Modify Antenna Support Arms on Communications Antenna Towers
6950.19	Practices and Procedures for Lightning Protection, Grounding, Bonding, and Shielding Implementation
6950.20	Fundamental Consideration of Lightning Protection, Grounding, Bonding, and Shielding
6960.1	Sanitary Systems in FAA Facilities
7210.3	Facility Operation and Administration
OA-P-8200.1	FAA U.S. Standard Flight Inspection Manual

3. **Commercial Documents.**

NFPA 70	National Fire Protection Association Title 70, National Electrical Code Articles 200 through 280, Grounding and Surge Protection
NFPA 78	National Fire Protection Association Title 78, Lightening Protection Code
UL 96A	Installation Requirements for Lightning Protection Systems

APPENDIX 3. EQUIPMENT SPECIFICATIONS

1. **PURPOSE.** This appendix contains listings of typical specifications for equipment items used in RCFs.

2. **EQUIPMENT CATEGORIES.** Table 1 identifies the A/G radio communications equipment categories, lists the equipment items covered under each category, and indicates the appropriate table that contains details of each equipment.

3. **EQUIPMENT SUMMARIES.** Tables 2 through 14 present physical and electrical characteristics and performance specifications for the A/G radio communications equipment items currently used. The tables permit comparison and evaluation of installation criteria and performance. These are intended for use by planning, design, installation, and maintenance personnel.

4. **RESERVED.**

5. **RESERVED.**

TABLE 1. EQUIPMENT CATEGORIES

Sheet 1 of 3

CATEGORY	EQUIPMENT	CATEGORY TABLE
VHF Receiver, FA-10452	CM-200/VR	TABLE 2
UHF Receiver, FA-10453	CM-200/UR	TABLE 3
VHF Transmitter, FA-10450	CM-200/VT	TABLE 4
UHF Transmitter, FA-10451	CM-200/UT	TABLE 5
Multimode Digital Radio		
VHF Transmitter, FA-17501	CAVU-2100	TABLE 6
VHF Receiver, FA-17500	CAVU-2100	TABLE 7
Low VHF Cavity RF Filter	FA-17502	TABLE 8
High VHF Cavity RF Filter	FA-17503	TABLE 8
UHF Transmitter low power (new)	CM-300/UT	TABLE 9
UHF Transmitter high power (new)	CM-350/UT	TABLE 10
UHF Receiver (new)	CM-300/UR	TABLE 11
LINEAR POWER AMPLIFIERS (LPA)		
VHF LPA	CM-50	TABLE 12
UHF LPA	CM-51	TABLE 13
TERMINAL FACILITY EMERGENCY TRANSCEIVERS		
UHF/VHF Emergency Transceiver (FA11200)	PET-2000	TABLE 14
UHF/VHF Transceiver	URC-200	TABLE 14A

TABLE 1. EQUIPMENT CATEGORIES

Sheet 2 of 3

CATEGORY TABLE	EQUIPMENT	CATEGORY
VHF Transmitter Combiner	CT-27221	TABLE 14B
UHF Transmitter Combiner	CT-37222	TABLE 14C
Power Loss and VSWR	Combiner Cavity	TABLE 14D
RECEIVER MULTICOUPLER		
VHF Rcvr Multicoupler	MDP-1-1113	TABLE 14E
UHF Rcvr Multicoupler	MDP-1-2240	TABLE 14F
Receiver Multicoupler	Signal Sensitivity	TABLE 14G
VHF/UHF ANTENNA ELECTRICAL CHARACTERISTICS		
VHF, Dipole	DPV-35, TACO D-5076	TABLE 14H
UHF, Dipole	DPV-37, TACO D-5077	TABLE 14H
VHF, Dipole, 4 dBi Gain	DPV-40, TACO D-5062A	TABLE 14I
VHF, Dipole, 4 dBi Gain	DPV-40B	TABLE 14I
VHF, Directional, Yagi	YG-118	TABLE 14I
VHF/VHF, Dual Dipole	DPV-36, TACO D-5072	TABLE 14J
UHF/UHF, Dual Dipole	DPV-38, TACO D-5074	TABLE 14J
UHF/VHF, Dual Dipole	DPV-39, TACO D-5073	TABLE 14J

TABLE 1. EQUIPMENT CATEGORIES

Sheet 3 of 3

CATEGORY TABLE	EQUIPMENT	CATEGORY
VHF/UHF ANTENNA PHYSICAL CHARACTERISTICS		
VHF, Dipole	DPV-35, TACO D-5056	TABLE 14K
VHF/VHF, Dual Dipole	DPV-36, TACO D-5072	TABLE 14K
UHF, Dipole	DPV-37, TACO D-5077	TABLE 14K
UHF/UHF, Dual Dipole	DPV-38, TACO D-5074	TABLE 14L
UHF/VHF, Dual Dipole	DPV-39, TACO D-5073	TABLE 14L
VHF, Directional, Yagi	YG-118	TABLE 14L
VHF, Dipole, 4 dBi Gain	DPV-40, TACO D-5061A1	TABLE 14M
VHF, Dipole, 4 dBi Gain	DPV-40B	TABLE 14M

TABLE 2. CM-200/VR VHF RECEIVER, TYPICAL CHARACTERISTICS
Sheet 1 of 2

FA-10452 PARAMETER	DATA	EXPLANATION
VHF Receiver	Model CM-200/VR NSN 5820-01-369-1355	Single Frequency, Oscillator Synthesizer
Prime Power	120 Volts AC (± 10%)	Single Phase
	57--63 Hertz	AC Frequency
	8 Watts	Power
Alternate Power	24 Volts DC (+20%,-10%)	Alternate Prime
Dimensions (Inches)	3.5 H x 17 W x 11.5 D	Standard 19 Inch Rack Mount
Weight	15 Pounds	Uncrated
Operating Temp	-10°C to +50°C	Required
Crystal Osc Freq	16.8 MHz (± 0.0005%) Crystal Aging _< 5 PPM	Frequency Standard Long Term
Rx Frequency Range	117.975 to 136.975 MHz	Step Tunable
Available Channels	One Channel	Set to Channel Frequency
Tuning Increments	25 kHz	Channel Steps
Type of Receiver	Dual Conversion	Two IF Steps
	45 MHz	1st IF Freq.
	455 kHz	2nd IF Freq.
Sensitivity	<- 3.0 microvolts (µV)	30% AM
	for 10 dB (S+N) /N	
IF Bandwidth	< 6 dB at ± 9 kHz	Bandwidth Rolloff
IF Selectivity	> 60 dB ACR at ± 25 kHz	Adjacent Channel Rejection (ACR)

TABLE 2. CM-200/VR VHF RECEIVER, TYPICAL CHARACTERISTICS
Sheet 2 of 2

FA-10452 PARAMETER	DATA	EXPLANATION
IF Image Rejection	≥ 80 dB	Includes Spurious
Intermodulation (IM) Suppression	≥ 75 dB, 3rd Order IM	In-band Products of 2 Interfering Signals Both ≥ 100kHz from Receive Frequency
Automatic Volume Control (AVC)	3 µV to 0.5 Volt	Attenuated Input Signal Level Range
Automatic Gain Control (AGC)	≤ 3 dB	Variance in Output Signal Level
Squelch Circuit	3 - 30 µV	Break (Off) Level Set Point Range
	< 3 µV	(On) Weak RF < -97.5 dBm
	> 30 µV	(On) Strong RF > 77.5 dBm
Emissions Class	A3A	Audio AM
Audio Line Output & Headset Output	100 milliwatts (mW) into 600 Ohms	Each Audio Output
Audio Freq Response	± 2 dB	Nominal Level Variation 300-3000 Hz
Audio Distortion	< 10% Distortion	At 50 Percent AM

TABLE 3. CM-200/UR UHF RECEIVER, TYPICAL CHARACTERISTICS
Sheet 1 of 2

FA-10453 PARAMETER	DATA	EXPLANATION
UHF Receiver	Model CM-200/UR NSN 5820-01-369-1354	Single Frequency, Oscillator Synthesizer
Prime Power	120 Volts AC (± 10%)	Single Phase
	57--63 Hertz	AC Frequency
	8 Watts	Power
Alternate Power	24 Volts DC (+20%,-10%)	Alternate Prime
Dimensions (Inches)	3.5 H x 17 W x 11.5 D	Standard 19 Inch Rack Mount
Weight	15 Pounds	Uncrated
Operating Temp	-10°C to +50°C	Required
Crystal Osc Freq	16.8 MHz (± 0.0005%) Crystal Aging _< 5 PPM	Frequency Standard Long Term
Rx Frequency Range	225 to 399.975 MHz	Step Tunable
Available Channels	One Channel	Set to Channel Frequency
Tuning Increments	25 kHz	Channel Steps
Type of Receiver	Dual Conversion	Two IF Steps
	45 MHz	1st IF Freq.
	455 kHz	2nd IF Freq.
Sensitivity	<- 3.0 microvolts (µV)	30% AM
	for 10 dB (S+N) /N	
IF Bandwidth	< 6 dB at ± 9 kHz	Bandwidth Rolloff
IF Selectivity	> 60 dB ACR at ± 25 kHz	Adjacent Channel Rejection (ACR)

TABLE 3. CM-200/UR UHF RECEIVER, TYPICAL CHARACTERISTICS
Sheet 2 of 2

FA-10453 PARAMETER	DATA	EXPLANATION
IF Image Rejection	≥ 80 dB	Includes Spurious
Intermodulation (IM) Suppression	≥ 70 dB, 3rd Order IM	In-band Products of 2 Interfering Signals Both ≥ 100kHz from Receive Frequency
Automatic Volume Control (AVC)	3 µV to 0.5 Volt	Attenuated Input Signal Level Range
Automatic Gain Control (AGC)	≤ 3 dB	Variance in Output Signal Level
Squelch Circuit	3 - 30 µV	Break (Off) Level Set Point Range
	< 3 µV	(On) Weak RF < -97.5 dBm
	> 30 µV	(On) Strong RF > 77.5 dBm
Emissions Class	A3A	Audio AM
Audio Line Output & Headset Output	100 milliwatts (mW) into 600 Ohms	Each Audio Output
Audio Freq Response	± 2 dB	Nominal Level Variation 300-3000 Hz
Audio Distortion	< 10% Distortion	At 50 Percent AM

TABLE 4. CM-200/VT VHF Transmitter, TYPICAL CHARACTERISTICS
Sheet 1 of 2

FA-10450 PARAMETER	DATA	EXPLANATION
VHF Transmitter	Model CM-200/VT NSN 5820-01-369-1352	Single Frequency, Oscillator Synthesizer Cavity Filter
Prime Power	120 Volts AC (± 10%)	Single Phase
	57--63 Hertz	AC Frequency
	115 Watts	Power
Alternate Power	24 Volts DC (+20%,-10%)	Alternate Prime
Dimensions (Inches)	5.25 H x 17 W x 16.5 D	Standard 19 Inch Rack Mount
Weight	29.4 Pounds	Uncrated
Crystal Osc Freq	16.8 MHz (± 0.0005%) Crystal Aging _< 5 PPM	Frequency Standard Long Term
Tx Frequency Range	117.975 to 136.975 MHz	Pretuned Cavity Filter Limits to One Set Freque
Available Channels	One Channel	Set to Pretuned Cavity Filter Frequency
Tuning Increments	25 kHz	Requires Cavity Filter Retuning or Replacement
Output Power	10 Watts CW (Carrier) 5-12 Watts Range 36 Watts PEP	(Nominal) Adjustable Level @ 90% Modulation
Output Impedance	50 Ohms (Nominal)	Out to Antenna
VSWR Effects	> 2:1	Reduced Exciter Output Power
	∞ VSWR	No Eqpt Damage

TABLE 4. CM-200/VT VHF TRANSMITTER, TYPICAL CHARACTERISTICS
Sheet 2 of 2

FA-10450 PARAMETER	DATA	EXPLANATION
Harmonic Output	-70 dBc	Down from Carrier
Spurious Output	-80 dBc	Down from Carrier
Carrier AM Noise	≥ 40 dB	Below 1 kHz 90% AM Ref
Noise Power	≥ 164 dBc/Hz	Freq ≥ ± 4 MHz from Carrier
Emissions Class	A3A	Audio AM
Audio Input	600 Ohms Balanced	Input Impedance to Center Tap Transformer
	-25 to +10 dBm	Audio Level for 1 kHz 90% AM Ref
Audio Freq Response	± 2dB	Nominal Level Variation 300-3000 Hz
Audio Distortion	< 15 Percent	1 kHz 90% AM Ref
Duty Cycle	Continuous at -10°C to +50°C	Required
Compatibility	Exciter (Use with Motorola CM-50 LPA or equal)	Not Compatible with AN/GRT LPA Equipment

TABLE 5. CM-200/UT UHF Transmitter, TYPICAL CHARACTERISTICS
Sheet 1 of 2

FA-10451 PARAMETER	DATA	EXPLANATION
UHF Transmitter	Model CM-200/UT NSN 5820-01-369-1353	Single Frequency, Oscillator Synthesizer Cavity Filter
Prime Power	120 Volts AC (± 10%)	Single Phase
	57--63 Hertz	AC Frequency
	115 Watts	Power
Alternate Power	24 Volts DC (+20%,-10%)	Alternate Prime
Dimensions (Inches)	5.25 H x 17 W x 16.5 D	Standard 19 Inch Rack Mount
Weight	30 Pounds	Uncrated
Crystal Osc Freq	16.8 MHz (± 0.0005%) Crystal Aging _< 5 PPM	Frequency Standard Long Term
Tx Frequency Range	225 to 399.975 MHz	Pretuned Cavity Filter Limits to One Set Freque
Available Channels	One Channel	Set to Pretuned Cavity Filter Frequency
Tuning Increments	25 kHz	Requires Cavity Filter Retuning or Replacement
Output Power	10 Watts CW (Carrier) 5-12 Watts Range 36 Watts PEP	(Nominal) Adjustable Level @ 90% Modulation
Output Impedance	50 Ohms (Nominal)	Out to Antenna
VSWR Effects	> 2:1	Reduced Exciter Output Power
	∞ VSWR	No Eqpt Damage

TABLE 5. CM-200/UT UHF TRANSMITTER, TYPICAL CHARACTERISTICS
Sheet 2 of 2

FA-10451 PARAMETER	DATA	EXPLANATION
Harmonic Output	-70 dBc	Down from Carrier
Spurious Output	-80 dBc	Down from Carrier
Carrier AM Noise	≥ 40 dB	Below 1 kHz 90% AM Ref
Noise Power	≥ 164 dBc/Hz	Freq ≥ ± 4 MHz from Carrier
Emissions Class	A3A	Audio AM
Audio Input	600 Ohms Balanced	Input Impedance to Center Tap Transformer
	-25 to +10 dBm	Audio Level for 1 kHz 90% AM Ref
Audio Freq Response	± 2dB	Nominal Level Variation 300-3000 Hz
Audio Distortion	< 15 Percent	1 kHz 90% AM Ref
Duty Cycle	Continuous at -10°C to +50°C	Required
Compatibility	Exciter (Use with Motorola CM-51 LPA or equal)	Not Compatible with AN/GRT LPA Equipment

TABLE 6. CAVU-2100 VHF TRANSMITTER, TYPICAL CHARACTERISTICS
Sheet 1 of 2

FA-17501 PARAMETER	DATA	EXPLANATION
VHF Transmitter	CAVU-2100 NSN 5820-01-493-8905	Single Frequency, Oscillator Synthesizer
Prime Power	120 Volts AC (±10%) 60Hz (±3 Hz)	Single Phase AC Frequency
15 W RF Output	4.0 Amps max	Low Power
50W RF Output	8.0 Amps max allowed	High Power
DC Power	24 V (-10/+20%)	Alternate Prime
DC Current	10.0 Amps max	Low Power
DC Current	20.0 Amps max allowed	High Power
Dimensions (Inches)	3.5 H x 19 W x 17.5 D	Standard 19 Inch Rack Mount
Weight	31.5 Pounds	Uncrated
Frequency Stability	± 1PPM	Frequency Standard Long Term
Tx Frequency Range	112.000 to 136.975 MHz	
Channel Spacing	25kHz (1000 Channels) 8.33 kHz (2998 Channels)	
RF Power Output	15W CW (Adjustable 2-15 W) 50W CW (Adjustable 10-50W)	
Output Impedance	50 Ohms (Nominal)	Out to Antenna
VSWR Effects	Operates at 3.0:1 or less	Without damage
Harmonic Output	< -80 dBc at full Carrier Output	1kHz Modulation at 90%
Spurious Output Fixed Tuned	< -100dBc at ≥ 500kHz < -113dBc at ≥ 800kHz < -127dBc at ≥ 2 MHz	Offset frequencies
Spurious Output Remotely Tuned	< -100dBc at ≥ 500kHz < -107dBc at ≥ 800kHz	Offset frequencies

TABLE 6. CAVU-2100 VHF TRANSMITTER, TYPICAL CHARACTERISTICS
Sheet 2 of 2

FA-17501 PARAMETER	DATA	EXPLANATION
Carrier Noise Level	> 40dB below detected audio output	90% modulation reference
Emissions Class	A3A	Audio AM
Audio Input Impedance	600 Ohms Balanced (±10%)	
Distortion	< 5% with audio input set to any frequency between 300 Hz to 3000 Hz at any level between -25dBm to 20 dBm, and modulation at 90%	< 10% over same frequency range when audio input level set to achieve maximum
Duty Cycle	100%	

TABLE 7. CAVU-2100 VHF RECEIVER, TYPICAL CHARACTERISTICS
Sheet 1 of 2

FA-17500 PARAMETER	DATA	EXPLANATION
VHF Receiver	CAVU-2100 NSN 5820-01-493-8929	Single Frequency, Oscillator Synthesizer
Prime Power	120 Volts AC (±10%) 60Hz (±3 Hz)	Single Phase AC Frequency
AC Current	1.0 Amps max	
DC Power	24 V (-10/+20%)	Alternate Prime
DC Current	3.0 Amps max	
Dimensions (Inches)	3.5 H x 19 W x 17.5 D	Standard 19 Inch Rack Mount
Weight	16.0 Pounds	Uncrated
Frequency Stability	± 1PPM	Frequency Standard Long Term
Rx Frequency Range	112.000 to 136.975 MHz	
Channel Spacing	25kHz (1000 Channels) 8.33 kHz (2998 Channels)	
Modulation	DSB-AM	
Input Impedance	50 Ohms (Nominal)	From Antenna
Receiver Selectivity 25 kHz channel spacing	± 9kHz min,6dB down ± 25 kHz max,60dB down ± 50 kHz max,80dB down	
Receiver Selectivity 8.33 kHz channel spacing	± 3.5 kHz min,6dB down ± 8.33kHz max,60dBdown ± 25 kHz max,80dB down	
Audio Response	<± 3dB, 300 to 600 Hz <± 2dB, 600 to 3000 Hz <-10dB at 100Hz and 10 kHz	

TABLE 7. CAVU-2100 VHF RECEIVER, TYPICAL CHARACTERISTICS
Sheet 2 of 2

FA-17500 PARAMETER	DATA	EXPLANATION
Sensitivity	≤ -102dBm at any single freq, 1004 Hz modulation at 30%, for 10 dB or > SINAD.	
Audio Input Impedance	600 Ohms Balanced (±10%)	
Adjacent Channel Rejection	Sensitivity not degraded by more then 3 dB in the presence of a -65 dBm adjacent channel	
Image Rejection	Sensitivity is not degraded more than 3 dB by unmodulated carrier for spurious response frequencies	Includes receiver image frequency applied to RF input at a level 80dB above the desired signal
Squelch Audio Signal-to-Noise Threshold	Adjustable (±2 dB)anywhere in the range of +5 dB (min) to +15 dB	
Squelch RF Power Level Threshold	Adjustable anywhere I the range -113 dBm to -50 dBm. ±2 dB, -102 dBm to -5 dBm.	
Audio Output Level	+20 dBm (into 600 ohms)	
Audio Output Impedance	600 ohm balanced (±10%)	

TABLE 8. MDR HI POWER CAVITY RF FILTER, PHYSICAL CHARACTERISTICS

FA-17503 PARAMETER	DATA	EXPLANATION
Dimensions (inches)	3.5 H x 19 W x 16.5D	Mounts on top of transmitter
Weight	14.5 lbs	
Antenna Transfer Relay	SPDT	Internal loss < 1 dB

MDR LOW POWER CAVITY RF FILTER, PHYSICAL CHARACTERISTICS

FA-17503 PARAMETER	DATA	EXPLANATION
Dimensions (inches)	1.875 H x 19 W x 16.5D	Mounts on top of transmitter
Weight	9 lbs	
Antenna Transfer Relay	SPDT	Internal loss < 1 dB

TABLE 9. CM-300/UT Low Power UHF Transmitter, TYPICAL CHARACTERISTICS Sheet 1 of 2

FA-18001 PARAMETER	DATA	EXPLANATION
UHF Transmitter	Model CM-300/UT NSN 5895-01-505-7139	Single Frequency, Oscillator Synthesizer Cavity Filter
Prime Power	120 Volts AC (± 10%)	Single Phase
	60 (±3 Hz)	AC Frequency
AC Current	2.0 Amps max (keyed) 0.2 Amps (unkeyed)	Power
Alternate Power	+21 to +29 Volts VDC	Alternate Prime
Dimensions (Inches)	5.25 H x 19 W x 17.4 D	Standard 19 Inch Rack Mount
Weight	37 Pounds	Uncrated
Frequency Stability	<±2 PPM(for 1 year)	
Tx Frequency Range	225 to 399.975 MHz	Pretuned Cavity Filter Limits to One Set Freque
Available Channels	One Channel	Set to Pretuned Cavity Filter Frequency
Tuning Increments	25 kHz, 7,000 available channels	Requires Cavity Filter Retuning or Replacement
Output Power	10 Watts CW (Carrier) 2-10 Watts Range	(Nominal) Adjustable Level @ 90% Modulation
Output Impedance	50 Ohms (Nominal)	Out to Antenna
VSWR Effects	> 2:1	Reduced Exciter Output Power
	∞ VSWR	No Eqpt Damage

TABLE 9. CM-300/UT Low Power UHF Transmitter, TYPICAL CHARACTERISTICS Sheet 2 of 2

FA-18001 PARAMETER	DATA	EXPLANATION
Harmonic Output	> -80 dBc at full carrier output, 1kHz modulation @ 90%	
Spurious Output	> -89 dBc at = 500 kHz offset	
Distortion	< 10% @ 90% modulation for audio 300 Hz to 3000 Hz	
Carrier Noise Level	> 40dB below 1kHz, 90% modulation ref.	
Emissions Class	A3A	Audio AM
Audio Input	600 Ohms Balanced, -25 dBm to +20 dBm	Input Impedance to Center Tap Transformer
Keying Time	< 30 msec	
Duty Cycle	Continuous at -10 ° C to +50 ° C	Required

TABLE 10. CM-350/UT High Power UHF Transmitter, TYPICAL CHARACTERISTICS Sheet 1 of 2

FA-18002 PARAMETER	DATA	EXPLANATION
UHF Transmitter	Model CM-350/UT NSN 6030-01-505-7163	Single Frequency, Oscillator Synthesizer Cavity Filter
Prime Power	120 Volts AC (± 10%)	Single Phase
	60 (±3 Hz)	AC Frequency
AC Current	8.0 Amps max (keyed) 0.4 Amps (unkeyed)	Power
Alternate Power	+21 to +29 Volts VDC	Alternate Prime
Dimensions (Inches)	8.75 H x 19 W x 17.4 D	Standard 19 Inch Rack Mount
Weight	60 Pounds	Uncrated
Frequency Stability	<±2 PPM(for 1 year)	
Tx Frequency Range	225 to 399.975 MHz	Pretuned Cavity Filter Limits to One Set Freque
Available Channels	One Channel	Set to Pretuned Cavity Filter Frequency
Tuning Increments	25 kHz, 7,000 available channels	Requires Cavity Filter Retuning or Replacement
Output Power	50 Watts CW (Carrier) 10-50 Watts Range	(Nominal) Adjustable Level @ 90% Modulation
Output Impedance	50 Ohms (Nominal)	Out to Antenna
VSWR Effects	> 2:1	Reduced Exciter Output Power

TABLE 10. CM-350/UT High Power UHF Transmitter, TYPICAL CHARACTERISTICS Sheet 2 of 2

FA-18002 PARAMETER	DATA	EXPLANATION
VSWR Effects	∞ VSWR	No Eqpt Damage
Harmonic Output	> -80 dBc at full carrier output, 1kHz modulation @ 90%	
Spurious Output	> -89 dBc at = 500 kHz offset	
Distortion	< 10% @ 90% modulation for audio 300 Hz to 3000 Hz	
Carrier Noise Level	> 40dB below 1kHz, 90% modulation ref.	
Emissions Class	A3A	Audio AM
Audio Input	600 Ohms Balanced, -25 dBm to +20 dBm	Input Impedance to Center Tap Transformer
Keying Time	< 30 msec	
Duty Cycle	Continuous at -10°C to +50°C	Required

TABLE 11. CM-300/UR UHF Receiver, TYPICAL CHARACTERISTICS
Sheet 1 of 2

FA-18000 PARAMETER	DATA	EXPLANATION
UHF Receiver	Model CM-300/UR NSN 5840-01-505-7137	Single Frequency, Oscillator Synthesizer Cavity Filter
Prime Power	120 Volts AC (± 10%)	Single Phase
	60 (±3 Hz)	AC Frequency
AC Current	0.5 Amps max.	Power
Alternate Power	+21 to +29 Volts VDC	Alternate Prime
DC Current	1.0 Amps max.	
Dimensions (Inches)	3.5 H x 19 W x 13 D	Standard 19 Inch Rack Mount
Weight	14 Pounds	Uncrated
Frequency Stability	<±2 PPM(for 1 year)	
Rx Frequency Range	225 to 399.975 MHz	Pretuned Cavity Filter Limits to One Set Frequency
Available Channels	One Channel	Set to Pretuned Cavity Filter Frequency
Tuning Increments	25 kHz, 7,000 available channels	Requires Cavity Filter Retuning or Replacement
IF Selectivity	± 9kHz min., 6dB down max. ± 25kHz max. 60dB down min.	
Sensitivity (10 dB SINAD)	≤ -102 dBm at any single frequency, 1kHz modulation at 30%	

TABLE 11. CM-300/UR Receiver, TYPICAL CHARACTERISTICS
Sheet 2 of 2

FA-18000 PARAMETER	DATA	EXPLANATION
Input Impedance	50 ohm nominal	
Image Rejection	-70 dBc (typical)	
Squelch	Two types; both adjustable 1. Carrier Squelch: -102dBm to -65dBm (RF Signal Level) 2. Noise Squelch: 5 to 15dB (Audio S/N)	
Audio Response	± 2 dB, 300 to 3000 Hz Down at least 20dB t 10 kHz Down at least 10dB at 100Hz	
Audio Output Level	> 100mW into 600 ohms (-25dBm to +20dBm)	
Audio Output Impedance	600 ohms	
Max. RF Input into Rcvr	+13 dBm	

TABLE 12. CM-50 VHF LINEAR POWER AMPLIFIER, TYPICAL CHARACTERISTICS Sheet 1 of 2

CM-50 LPA PARAMETER	DATA	EXPLANATION
VHF LPA	Motorola Model CM-50	Activated by Tx RF Input Energy Detection
Power Supply	115/230 Volts AC (± 5%)	Single Phase
	45-65 Hertz	AC Frequency
Power	350 Watts	Consumed
Alternate Power	23-29 Volts DC	Alternate Supply
Dimensions (Inches)	5.25 H x 19 W x 18.5 D	Standard 19 Inch Rack Mount
Weight	< 55 Pounds	Uncrated
Tx Frequency Range	117.975 to 136.975	MHz
Tx Safety Bypass	10 Watt	Bypass to Antenna
Receive Bypass	≤ 2 dB	Insertion Loss
Operating Temp	-10°C to +50°C	Continuous Duty
Humidity	90% at +40°C	No Dew Accumulation
Output Power	50 Watts Carrier	Nominal
	180 Watts PEP	@ 90% AM
Input Impedance	50 Ohms	With Max 2:1 VSWR
Output Impedance	50 Ohms	With Max 2:1 VSWR
RF Input Power	8 to 12 Watts	From Transmitter

TABLE 12. CM-50 VHF LINEAR POWER AMPLIFIER, TYPICAL CHARACTERISTICS
Sheet 2 of 2

CM-50 LPA PARAMETER	DATA	EXPLANATION
Distortion	≤ 10 Percent	At 90% AM
Intermodulation (IM) Output	< 30dBc	For -20 dBc Interference
Permissible Mismatch	∞ VSWR	No Eqpt Damage
Harmonics	-70 dBc	
Spurious	-70 dBc	
Compatibility	Use with CM-200VT Transmitter	Not compatible with AN.GRT Eqpt

TABLE 13. CM-51 UHF LINEAR POWER AMPLIFIER, TYPICAL CHARACTERISTICS Sheet 1 of 2

CM-51 LPA PARAMETER	DATA	EXPLANATION
UHF LPA	Motorola Model CM-51	Activated by Tx RF Input Energy Detection
Power Supply	115/230 Volts AC (± 5%)	Single Phase
	45-65 Hertz	AC Frequency
Power	500 Watts	Consumed
Alternate Power	23-29 Volts DC	Alternate Supply
Dimensions (Inches)	5.25 H x 19 W x 18.5 D	Standard 19 Inch Rack Mount
Weight	< 55 Pounds	Uncrated
Tx Frequency Range	225 to 399.975	MHz
Tx Safety Bypass	10 Watt	Bypass to Antenna
Receive Bypass	≤ 2 dB	Insertion Loss
Operating Temp	-10°C to +50°C	Continuous Duty
Humidity	90% at +40°C	No Dew Accumulation
Output Power	50 Watts Carrier	Nominal
	180 Watts PEP	@ 90% AM
Input Impedance	50 Ohms	With Max 2:1 VSWR
Output Impedance	50 Ohms	With Max 2:1 VSWR
RF Input Power	8 to 12 Watts	From Transmitter

TABLE 13. CM-51 UHF LINEAR POWER AMPLIFIER, TYPICAL CHARACTERISTICS Sheet 2 of 2

CM-51 LPA PARAMETER	DATA	EXPLANATION
Distortion	≤ 10 Percent	At 90% AM
Intermodulation (IM) Output	< 30dBc	For -20 dBc Interference
Permissible Mismatch	∞ VSWR	No Eqpt Damage
Harmonics	-70 dBc	
Spurious	-70 dBc	
Compatibility	Use with CM-200UT Transmitter	Not compatible with AN.GRT Eqpt

TABLE 14. PET-2000 UHF/VHF EMERGENCY TRANSCEIVER, TYPICAL CHARACTERISTICS Sheet 1 of 2

FA-11200 PARAMETER	DATA	EXPLANATION
UHF/VHF Transceiver	Model PET-2000 NSN 5850-01-418-4350	Single Frequency, Oscillator Synthesizer
Prime Power	120 Volts AC (± 10%)	Single Phase
	60 Hz ±2Hz	AC Frequency
Current	2.5 Amps (max)	Power
DC Power Supply	26 to 30 VDC (28 VDC nominal)	3.0 amp max (xmit mode) 0.4 amps max (rcv mode)
Battery	>30 minutes from rechargeable battery pack	
Dimensions (Inches)	3.1 H x 11.7 W x 18 D	With Battery Installed
Weight	18 Pounds	Uncrated
Operating Temp	-25°C to +55°C	Required
Stability	± 5 PPM	
Frequency Range	VHF 118 to 136.975 MHz UHF 225 to 399.975 MHz	Fully Tunable with 10 preset memory channels
Tuning Increments	25 kHz	Channel Steps
IF Selectivity	-6dB, ±9kHz min.; -60dB, ±25 kHz max.	
Audio Response	300 to 3000 Hz	
Sensitivity (10 dB SNR)	-97.5 dBm (3µV), 1kHz modulation @ 30%	
Image Response	60 dB down (typical)	
Spurious Response	60 dB down (typical)	

TABLE 14. PET-2000 UHF/VHF EMERGENCY TRANSCEIVER, TYPICAL CHARACTERISTICS

Sheet 2 of 2

FA-11200 PARAMETER	DATA	EXPLANATION
Squelch	Manual adjust, carrier-to-noise ratio squelch changing to carrier-level squelch at stronger signal levels	
Squelch Range	Min < 6dB SINAD, Max > 20dB SINAD	
Antenna Port Impedance	50 ohms nominal	
Power Output CW	5 watts nominal, 4 Watts min.	
AM Modulation	90% with less than 15% distortion	
Spurious Outputs	60 dB below CW carrier (typical)	
Harmonic Outputs	60 dB below CW carrier (typical)	
Emissions Class	A3A	Audio AM

TABLE 14A. URC-200 UHF/VHF TRANSCEIVER, TYPICAL CHARACTERISTICS

Sheet 1 of 2

URC-200 PARAMETER	DATA	EXPLANATION
UHF/VHF Transceiver	Model URC-200 NSN 5850-01-417-6304	Single Frequency, Oscillator Synthesizer
Prime Power	120 Volts AC (± 10%)	Single Phase
	60 Hz ±2Hz	AC Frequency
Current	3.5 Amps (max)	Power
DC Power Supply	22 to 30 VDC (28 VDC nominal)	
Battery	>30 minutes from rechargeable battery pack	7 hrs with BB-590/U & 23 hrs with BA-5590/U @ 9:1 ratio rcv/xmit
Dimensions (Inches)	3.1 H x 10.8 W x 14.4 D	With Battery Installed
Weight	16.8 Pounds	Uncrated
Operating Temp	-20°C to +55°C	Required
Stability	± 5 PPM	
Frequency Range	VHF 115 to 173.995 MHz UHF 225 to 399.995 MHz	Fully Tunable with 10 preset memory channels
Tuning Increments	25 kHz, 12.5 kHz, & 5 kHz	Channel Steps
IF Selectivity	-6dB, ±9kHz min.	
Audio Response	300 to 3000 Hz(+2, -4dB)	
Sensitivity (10 dB SNR)	-103.5 dBm for 10dB SINAD, 1kHz modulation @ 30%	
Image Response	-80 dB down (typical)	

TABLE 14A. URC-200 UHF/VHF TRANSCEIVER, TYPICAL CHARACTERISTICS
Sheet 2 of 2

FA-URC-200 PARAMETER	DATA	EXPLANATION
Spurious Response	-80 dB down (typical)	
Squelch Range	-110 dBm (0.7µV) to -80 dBm (22.3µV) nominal	
Antenna Port Impedance	50 ohms nominal	
Power Output AM	10 watts avg high, 5 Watts avg low	
AM Modulation	60% to 90% at 1 kHz with less than 10% distortion @ 30% AM, 15% Max @ 80% AM	
Spurious Outputs	-70 dBc (typical)	
Harmonic Outputs	-53 dBc (typical)	
Emissions Class	AM & FM	

TABLE 14B. CT-27221 VHF TRANSMITTER COMBINER, TYPICAL CHARACTERISTICS

CT-27221 PARAMETER	DATA	EXPLANATION
VHF Transmitter Combiner	Sinclair Model CT-27221	Passive Device
Dimensions (Inches)	40.5 H (with Castors) x 21 W x 21 D	Mounted in Open Frame Rack
Weight	150 pounds	Uncrated
Tx Frequency Range	118 to 137 MHz	
Number of Channels	4	To be Combined
Passband Insertion Loss	3.0 dB	Maximum
Input & Output Impedance	50 Ohms	Each Port, an N Female Connector
Input VSWR	1.25:1 Max VSWR	Or Input Return Loss 14.0dB Min
Output VSWR	1.5:1 Max VSWR	Or Output Return Loss 14.0 dB Min
Isolation: Tx to Tx Ant to Tx	70.0 dB Minimum 60.0 dB Minimum 50.0 dB Minimum	All Operate Temp +10°C - +40°C -10°C - +10°C and +40°C - +55°C
RF Input Power	50 Watts/Channel	Maximum
Harmonic and Spurious Suppression	70 dB Below Fundamental Freq Input Power Level	200 - 1.000 MHz

TABLE 14C. CT-27222 VHF TRANSMITTER COMBINER, TYPICAL CHARACTERISTICS

CT-27222 PARAMETER	DATA	EXPLANATION
UHF Transmitter Combiner	Sinclair Model CT-27222	Passive Device
Dimensions (Inches)	40.5 H (with Castors) x 21 W x 21 D	Mounted in Open Frame Rack
Weight	150 pounds	Uncrated
Tx Frequency Range	225 to 400 MHz	
Number of Channels	4	To be Combined
Passband Insertion Loss	3.0 dB	Maximum
Input & Output Impedance	50 Ohms	Each Port, an N Female Connector
Input VSWR	1.5:1 Max VSWR	Or Input Return Loss 14.0dB Min
Output VSWR	1.5:1 Max VSWR	Or Output Return Loss 14.0 dB Min
Isolation: Tx to Tx Ant to Tx	70.0 dB Minimum 60.0 dB Minimum 50.0 dB Minimum	All Operate Temp +10°C - +40°C -10°C - +10°C and +40°C - +55°C
RF Input Power	50 Watts/Channel	Maximum
Harmonic and Spurious Suppression	70 dB Below Fundamental Freq Input Power Level	425 - 1.000 MHz

TABLE 14D. TYPICAL TRANSMITTER COMBINER CAVITY POWER LOSS AND VSWR

M/S TRANSMITTER FREQUENCY (MHz)		50 OHM LOAD AT CAVITY OUT TX OUT (WATTS)	CAV OUT (WATTS)	ANTENNA AT CAVITY OUT TX OUT (WATTS)	CAV OUT (WATTS)	VSWR (ON ANTENNA) TX OUT RATIO	CAV OUT RATIO
122.2	#1	10	6.9	10	7.1	1.15	1.47
	#2	10	6.5	10	6.2	1.38	1.29
122.65	#1	10	6.9	10	6.0	1.63	1.43
	#2	10	6.8	10	6.4	1.70	1.37
124.25	#1	10	7.1	10	7.2	1.48	1.46
	#2	10	6.4	10	6.0	1.46	1.37
127.75	#1	10	5.9	10	6.4	1.38	1.49
	#2	10	6.8	10	7.6	1.55	1.55
133.275	#1	10	6.3	10	6.4	1.28	1.43
	#2	10	6.5	10	6.1	1.65	1.57
134.625	#1	10	6.6	10	6.5	1.34	1.51
	#2	10	7.0	10	7.1	1.79	1.62
255.4	#1	10	6.5	10	6.6	1.28	1.19
	#2	10	6.6	10	6.8	1.35	1.19
263.1	#1	10	6.8	10	6.8	1.15	1.18
	#2	10	7.3	10	7.3	1.15	1.13
296.7	#1	10	7.0	10	6.8	1.15	1.18
	#2	10	7.0	10	6.7	1.27	1.15
319.0	#1	10	6.2	10	6.2	1.15	1.20
	#2	10	6.6	10	6.7	1.23	1.35
346.4	#1	10	6.5	10	6.7	1.38	1.39
	#2	10	6.5	10	6.6	1.19	1.20
380.3	#1	10	6.2	10	6.2	1.45	1.20
	#2	10	6.8	10	7.0	1.43	1.35

TABLE 14E. MDP-1-1113 VHF RECEIVER MULTICOUPLER, TYPICAL CHARACTERISTICS - Sheet 1 of 2

NDP-1-1113 PARAMETER	DATA	EXPLANATION
VHF Receiver Multicoupler	MU-DEL Model MDP-1-1113	Active Device, Directional Coupler Input
Rx Frequency Range	118 to 137	MHz
Frequency Response	≥ 35 dB Down ≥ 20 dB Down	Below 108 MHz Above 160 Mhz
In-Band Linearity	± 1 dB (118-137 MHz)	At Input Levels of -125 dBm to +17 dBm
Number of Channels	4 Frequencies Maximum	To be Separated
RF Input (1)	50 Ohms Nominal & shall tolerate mismatch impedance of 0 to ∞ ohms	Input Impedance, N Female Conn (1)
RF Outputs (4)	50 Ohms Nominal Each	Output Impedance, BNC Female Connector (4)
VSWR	2.0:1 Maximum 1.5:1 Maximum	Input Each Output (4)
Input RF Power Capability	-125 dBm to +20 dBm	Dynamic Range
Isolation	25 dB Minimum	Between Outputs
RF Gain	0 dB ± 1 dB < 0.5 dB with Constant Input	Input to Output Level Variation Between Outputs

TABLE 14E. MDP-1-1113 VHF RECEIVER MULTICOUPLER, TYPICAL CHARACTERISTICS - Sheet 2 of 2

NDP-1-1113 PARAMETER	DATA	EXPLANATION
Noise Figure	9.5 dB Maximum	In 1 MHz BW Across Operating Range
Intermodulation (IM) Suppression	70 dB Below Rx Signal	In-band Products Of 2 Interfering Signals up to +17 dBm Each & Both ≥ 100 kHz Frequency
Power Required	120 Volts AC (± 10%) 57-63 Hz 24 Volts DC (-10%, +20%) 6 Amperes	Single Phase AC Frequency Alternate Supply Maximum Power
AC Power Connector	3-Prong	Standard US with Isolated Ground Prong
DC Power Connector	2-Prong	MS Connector
Dimensions (Inches)	3.5 H 19 x W x 17 D	Maximum
Operating Temp	10°C to +55°C	Continuous Use

TABLE 14F. TYPICAL RECEIVER MULTICOUPLER-SIGNAL SENSITIVITIES

M/S RECEIVER FREQUENCY	WITH SIG AT RX INPUT SENSITIVITY (µV)	WITH SIG AT RX INPUT SQUELCH (µV)	WITH SIG AT MIC INPUT SENSITIVITY (µV)	WITH SIG AT MIC INPUT SQUELCH (µV)
122.2 #1 (Note 1)				
#2				
122.65 #1	1.3	3.8	1.0	3.0
#2	1.6	3.8	1.5	3.0
124.25 #1	1.5	4.0	1.2	3.0
#2	1.0	4.0	1.0	3.0
127.75 #1	1.1	4.0	1.1	3.0
#2	0.9	3.8	1.1	3.0
133.275 #1	1.0	4.4	0.9	3.0
#2 (Note 2)	0.9	1.6	1.8	3.0
134.625 #1	2.0	3.6	1.5	3.0
#2	1.0	3.6	1.5	3.0
255.4 #1 (Note 1)				
#2				
263.1 #1	1.0	3.0	1.5	3.0
#2	1.3	4.0	1.7	3.0
296.7 #1	1.4	3.4	1.2	3.0
#2	4.8	2.9	3.2	3.0
319.0 #1	1.5	2.9	1.5	3.0
#2	1.5	2.3	1.5	3.0
346.4 #1	2,3	2.6	2.0	3.0
#2	1.5	2.3	2.6	3.0
380.3 #1	1.6	3.6	1.6	3.0
#2	1.8	2.6	2.2	3.0

Notes 1. Data was not taken for this frequency.
2. A bandpass cavity was connected between the receiver and multicoupler.

Table 14G. ANETENNA - ELECTRICAL CHARACTERISTICS

ANTENNA CHARACTERISTICS	DPV-35, TACO D-5076	DPV-37, TACO D-5077
Antenna Type	VHF Dipole	UHF Diploe
Frequency Range (MHz)	118-136	225-400
Gain (Referenced to Isotropic Radiator	0 dBi minimum	0 dBi minimum
Polarization	Vertical	Vertical
Elevation Beam		
Width	65° Minimum	65° Minimum
Beam Maximum	Horizon ±10°	Horizon ±10°
Azimuth Pattern	Omni ±1 dB Variance	Omni ±1 dB Variance
VSWR	2:1 Maximum	2:1 Maximum
Terminal		
Impedance	50 Ohms	50 Ohms
Coax Connector	N Female	N Female
DC Resistance to Ground	0 Ohms	0 Ohms
RF Power Rating	100 Watts Max	100 Watts Max

Table 14H. ANTENNA - ELECTRICAL CHARACTERISTICS

ANTENNA CHARACTERISTIC	DPV-40, TACO-D-5061A1	DPV-40B	YG-118
Antenna Type	VHF Dipole	VHF Dipole	VHF Yagi
Frequency Range (MHz)	118-136	118-156	118-136
Gain (Reference to Isotropic Radiator	4 dBi minimum	4 dBi minimum	10 dBi minimum (approx)
Polarization	Vertical	Vertical	Vertical
Elevation Beam			
Width	40° Minimum	30° Minimum	50° Typical
Mamimum Located	Horizon ±10°	Horizon ±10°	Horizon +10°
Front to Back Ratio			20 dB minimum
Azimuth Pattern	Omni ±1 dB Variance	Omni ±1 dB Variance	Directional, 65° Beam Width Typical
VSWR	2:1 Maximum	2:1 Maximum	2:1 Maximum
Terminal			
Impedance	50 Ohms	50 Ohms	50 Ohms
Coax Connector	N Female	N Female	N Female
DC Resistance To Ground	0 Ohms	0 Ohms	< 1 Ohm
RF Power Rating	100 Watts Maximum	100 Watts Maximum	50 Watts

Table 14I. ANTENNA - ELECTRICAL CHARACTERISTICS

ANTENNA CHARACTERISTIC	DPV-36, TACO-D-5072	DPV-38, TACO-D-5074	DPV-39, TACO-D-5073
Dual Dipole Antennas	VHF/VHF	UHF/UHF	UHF/VHF
Frequency Range (MHz)	118-136 118-136	225-400 225-400	225-400 118-136
Gain (Reference to Isotropic Radiator	0 dBi minimum	0 dBi minimum	0 dBi minimum
Polarization	Vertical	Vertical	Vertical
Elevation Beam Width Mamimum Located	 65° Minimum Horizon ±10°	 65° Minimum Horizon ±10°	 65° Typical Horizon +10°
Azimuth Pattern	Omni ±1 dB Variance	Omni ±1 dB Variance	Omni ±1 dB Variance
VSWR	2:1 Maximum	2:1 Maximum	2:1 Maximum
Terminals, 2 Each Impedance Coax Connector	 50 Ohms N Female	 50 Ohms N Female	 50 Ohms N Female
DC Resistance To Ground	0 Ohms	0 Ohms	0 Ohm
RF Power Rating	100 Watts Maximum	100 Watts Maximum	100 Watts

Table 14J. ANTENNA - PHYSICAL CHARACTERISTICS

ANTENNA CHARACTERISTIC	DPV-35, TACO-D-5076	DPV-36, TACO-D-5072	DPV-37, TACO-D-5077
Antenna Type	VHF Dipole	VHF/VHF Dual Dipole	UHF Dipole
Length	51.5 inches	142.25 inches	40.5 inches
Ship Weight	4.5 lbs	2.35 lbs	3.5 lbs
Radome Diameter	2.35 inches	2.35 inches	2.35 inches
Mount, IPA Pipe Mast Diameter	1.25 inches or 2.5 inches	2.5 inches	1.25 inches or 2.5 inches
All Antenna Parts	At DC Gnd Potential	At DC Gnd Potential	At DC Gnd Potential
Operational Conditions	100 mph Wind with ½ inch Radial Ice	100 mph Wind with ½ inch Radial Ice	100 mph Wind with ½ inch Radial Ice
Environmental			
Operating Temp	-50°C to +70°C	-50°C to +70°C	-50°C to +70°C
Humidity	0 to 100%	0 to 100%	0 to 100%
Rain	Up to 7 inches/hr	Up to 7 inches/hr	Up to 7 inches/hr
Service Life	10 Years Continuous and Unattended	10 Years Continuous and Unattended	10 Years Continuous and Unattended

Table 14K. ANTENNA - PHYSICAL CHARACTERISTICS

ANTENNA CHARACTERISTIC	DPV-38, TACO-D-5074	DPV-39, TACO-D-5073	YG-118
Antenna Type	UHF/UHF Dual Dipole	UHF/VHF Dual Dipole	VHF Yagi
Length	92 inches	94 inches	147 inches
Ship Weight	9.5 lbs	9.5 lbs	35 lbs
Radome Diameter	2.35 inches	2.35 inches	
Mount, IPA Pipe Mast Diameter	2.5 inches	2.5 inches	2.5 inches
All Antenna Parts	At DC Gnd Potential	At DC Gnd Potential	At DC Gnd Potential
Operational Conditions	100 mph Wind with ½ inch Radial Ice	100 mph Wind with ½ inch Radial Ice	85 knots Wind with ½ inch Radial Ice
Environmental			
Operating Temp	-50°C to +70°C	-50°C to +70°C	-50°C to +70°C
Humidity	0 to 100%	0 to 100%	0 to 100%
Rain	Up to 7 inches/hr	Up to 7 inches/hr	Up to 7 inches/hr
Service Life	10 Years Continuous and Unattended	10 Years Continuous and Unattended	10 Years Continuous and Unattended

Table 14L. ANTENNA - PHYSICAL CHARACTERISTICS

ANTENNA CHARACTERISTIC	DPV-40, TACO-D-5074	DPV-40B
Antenna Type	VHF Dipole, 4 dBi Gain	VHF Dipole, 4 dBi Gain
Length	133.75 inches	127.5 inches
Ship Weight	11 lbs	23 lbs
Radome Diameter	2.35 inches	5 inches
Mount, IPA Pipe Mast Diameter	1.25 inches or 2.5 inches	1.25 inches or 2.5 inches
All Antenna Parts	At DC Gnd Potential	At DC Gnd Potential
Operational Conditions	100 mph Wind with ½ inch Radial Ice	100 mph Wind with ½ inch Radial Ice
Environmental		
Operating Temp	-50°C to +70°C	-50°C to +70°C
Humidity	0 to 100%	0 to 100%
Rain	Up to 7 inches/hr	Up to 7 inches/hr
Service Life	10 Years Continuous and Unattended	10 Years Continuous and Unattended

APPENDIX 4. NOMOGRAPHS

1. **PURPOSE.** This appendix contains typical nomographs as reference material used in the RCF design criteria review.

2. **CATEGORIES.** Figures 1 through 4, identify the A/G propagation relationships significant to radio communications equipment. Figures 5 and 6 along with table 1 identify relationships significant to communications audio modulation.

3. **RESERVED.**

4. **RESERVED.**

5. **RESERVED.**

FIGURE 1. HOMOGRAPH FOR ELECTROMAGNETIC PROPAGATION IN FREE SPACE (100-100.000 MHz)

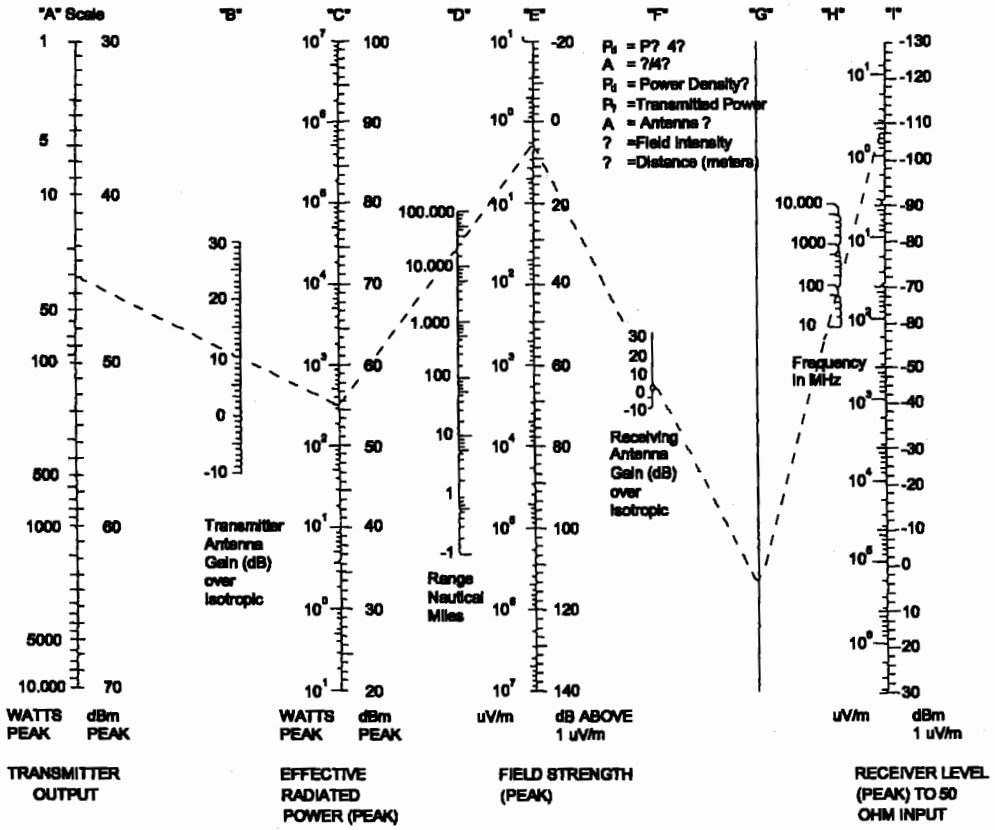

HOMOGRAPH FOR ELECTROMAGNETIC PROPAGATION IN FREE SPACE

EXAMPLE: A 30 WATT TRANSMITTER USING A 10dB ANTENNA IS FOUND TO HAVE AN EFFECTIVE RADIATED POWER (ERP) OF 300 WATTS BY EXTENDING A LINE THROUGH SCALES "A", "B" AND "C". THIS ERP PRODUCES A FIELD INTENSITY OF 2 MICRO VOLTS PER METER AT A RANGE OF 22.000 NAUTICAL MILES (LINE "CDE"). THE EFFECTS OF RECEIVING ANTENNA GAIN AND APERATURE ARE TAKEN INTO ACCOUNT WITH LINES "EFG" AND "GHI" INDICATING 0.75 MICRO VOLTS ACROSS A 50 ohm RECEIVER INPUT AT 130 MHz.

COUPLING AND LINE LOSSES.
THESE LOSSES MAY BE FOR ON THE "A" AND "I" SCALES. A 60 WATT TRANSMITTER WITH 3 dB LOSS TO ANTENNA WOULD START AT THE SAME POINT AS THE EXAMPLE ABOVE. SIMILARLY, A 3dB LOSS BETWEEN RECEIVER AND ANTENNA WOULD BE ACCOUNTED FOR IN THE LOSS FREE EXAMPLE ABOVE AS AN ADDITIONAL STEP ON SCALE "I" (-110.3-113dBm, OR ABOUT 1.5 µV)

ATTENTION IN EXCESS OF FREE SPACE CONDITIONS.
WHEN THE PROPAGATION LOSS IS GREATER THAN OFF FREE SPACE, THE FIELD INTENSITY (SCALE "E") SHOULD BE REDUCED ACCORDINGLY USING THE dB SCALE.
BASIC TRANSMISSION LOSS. THE PATH LOSS (AS DEFINED USING TWO LOSS-FREE ISOTROPIC ANTENNAS) IN THE EXAMPLE IS THE DIFFERENCE BETWEEN SCALES "A" AND "I" (46 + 110dBm) PLUS ANTENNA GAINS AS SCALES "B" AND "F" (10+3dB) TOTALING 169 dB

FIGURE 2. RADIO FIELD STRENGTH/POWER DENSITY CONVERSION CHART

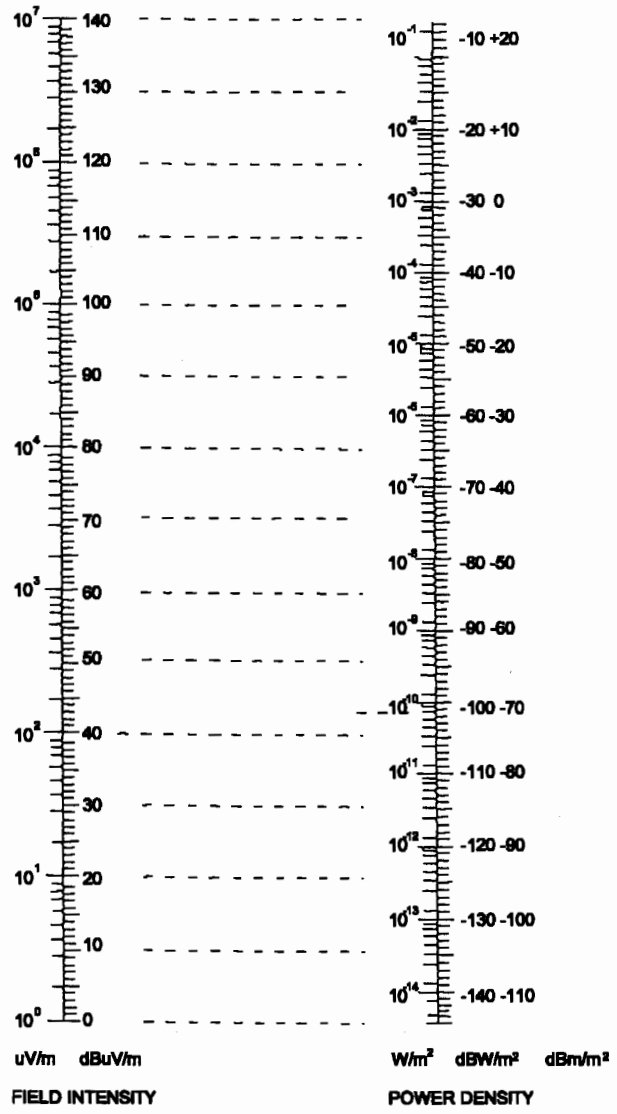

FIELD STRENGH/POWER DENSITY CONVERSION CHART
(EX. 100uV/m (40 dB) -266W/m²(-105.7 dB W/m,²-75.7 dBm/m²)

FIGURE 3. RADIO GROUND-TO AIR AND AIR-TO AIR dB LOSS/NAUTICAL MILES CHART

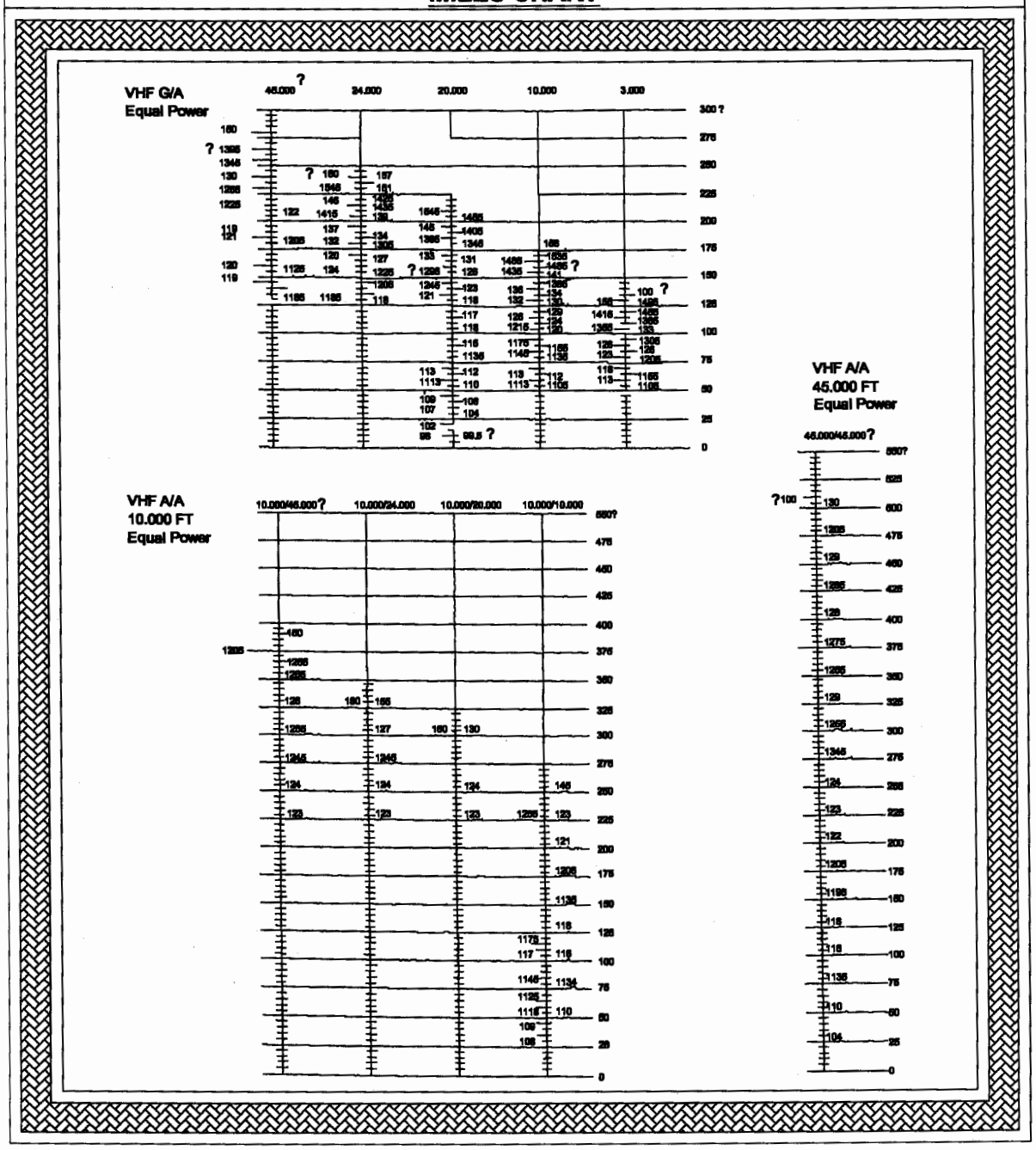

FIGURE 4. ANTENNA LOBING FOR PHASING SEPARATIONS OF 45 TO 720 DEGREES

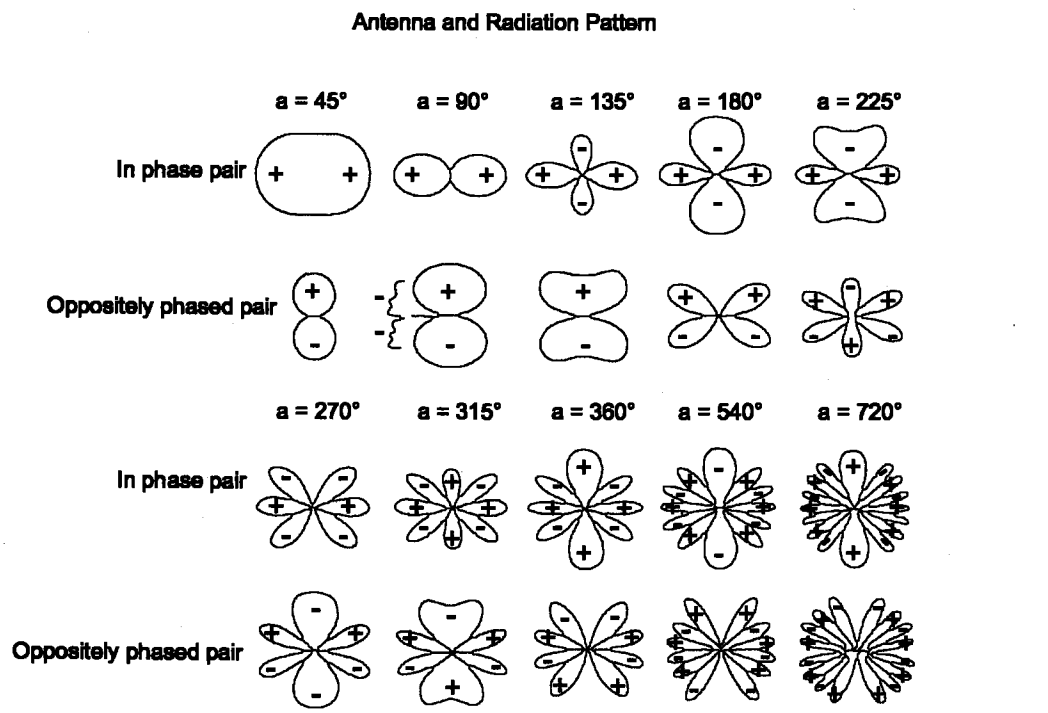

Comparison of horizontal radiation patterns of antenna pairs of various spacing fed equal currents that are both in phase and oppositely phased

FIGURE 5. AUDIO dB-VU-dBm CHART

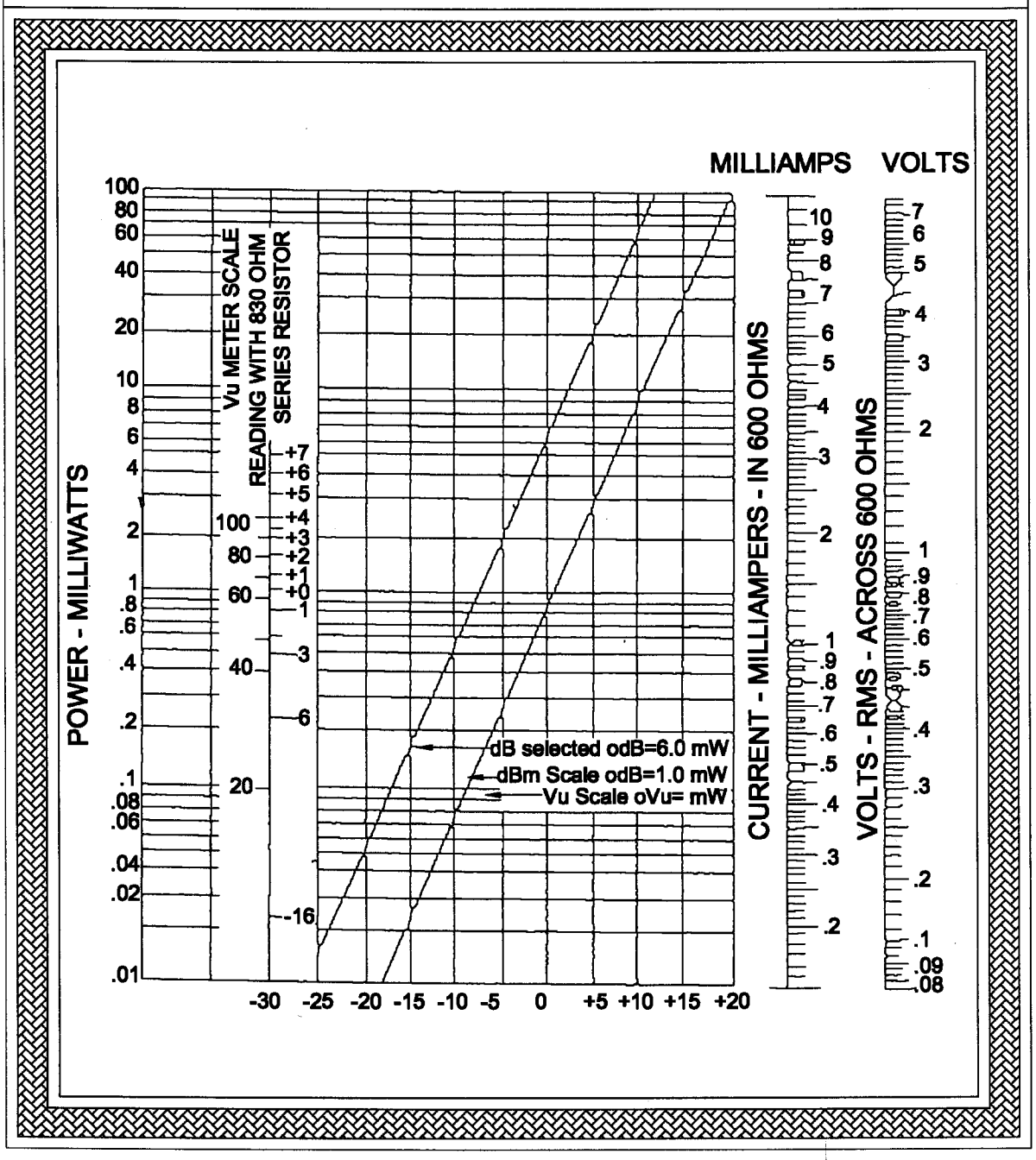

TABLE 15. AUDIO VOLTS/dBm CHART FOR 600 OHMS

DECIBELS ABOVE AND BELOW
A REFERENCE LEVEL OF 1mW INTO 600 OHMS

dB Down		Level	dB Up	
Volts	Milliwatts	dBm	Volts	Milliwatts
0.774 6	1.000	-0+	0.774 6	1.000
0.690 5	0.794 3	2	0.876 1	1.259
0.616 7	0.631 0	3	0.975 2	1.585
0.548 4	0.501 2	4	1.094	1.995
0.488 7	0.398 1	5	1.228	2.512
0.435 6	0.316 2	6	1.377	3.162
0.388 2	0.251 2	7	1.546	3.981
0.346 0	0.199 5	8	1.734	5.012
0.308 4	0.158 5	9	1.945	6.310
0.274 8	0.125 9	10	2.183	7.943
0.244 9	0.100 0	11	2.449	10.000
0.218 3	0.079 43	12	2.748	12.59
0.194 6	0.063 10	13	3.084	15.85
0.173 4	0.050 12	14	3.460	19.95
0.154 6	0.039 81	15	3.882	25.12
0.137 7	0.031 62	16	4.356	31.62
0.122 8	0.025 12	17	4.877	39.81
0.109 4	0.019 95	18	5.484	50.12
0.097 52	0.015 85	19	6.153	63.10
0.086 91	0.012 59	20	6.905	79.43
0.007 46	0.010 00	25	7.746	100.00
0.043 56	0.003 16	30	13.77	316.2
0.024 49	0.001 00	35	24.49	1.000W
0.013 77	0.000 316	40	43.56	3.162W
0.007 746	0.000 100	45	77.56	10.00W
0.004 356	3.16×10^{-5}	50	137.7	31.62W
0.002 449	1.00×10^{-5}	55	244.9	100W
0.001 377	3.16×10^{-6}	60	435.6	316.2W
0.000 774 6	1.00×10^{-6}	65	774.6	1 000W
0.000 453 6	3.16×10^{-7}	70	1 377	3 162W
0.000 244 9	1.00×10^{-7}	75	2 449	10 000W
0.000 137 7	3.16×10^{-8}	80	4 356	31 620W
0.000 077 46	1.00×10^{-8}	85	7 746	100 000W

NOTE: The power holds for any impedance, but the voltage holds only for 600 ohms.

FIGURE 6. TRANSMITTER MODULATION ANALYSIS

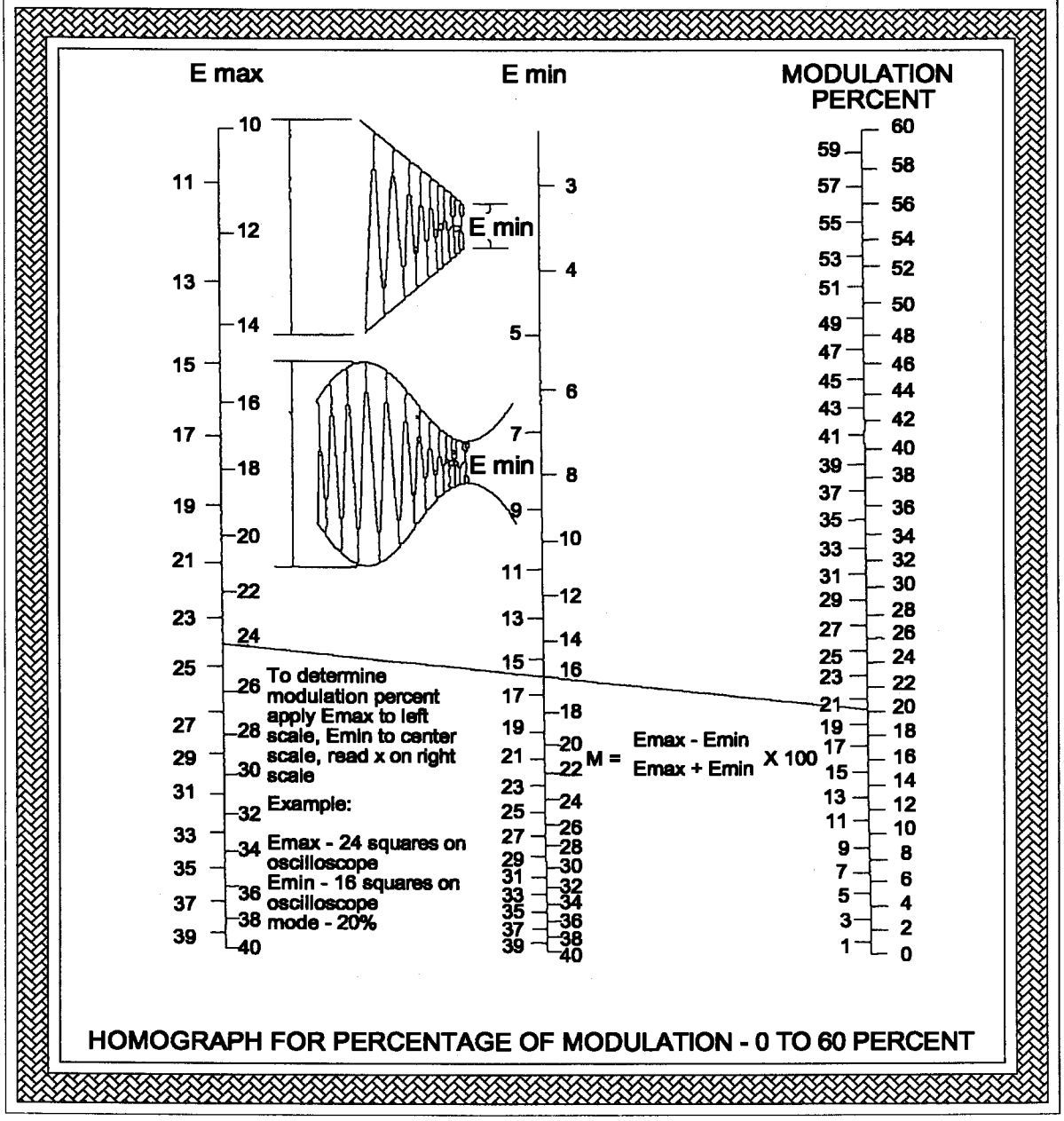

APPENDIX 5. RCF AIR-TO-GROUND FACILITY ANTENNA LOCATIONS

1. **GENERAL.** This appendix provides guidelines and requirements for locating and spacing the RCF antennas at the facility site. Interferences affecting VHF/UHF A/G communications are briefly discussed. Section 1 of this appendix describes the effect of each type of interference on the A/G communications system. The section also describes some tradeoffs that can be applied to achieve desired communications results even though physical restrictions prevent the use of ideal antenna arrangements. Section 1 also describes the relationship between receiver desensitization and off-frequency interference, transmitter intermodulation product interference, receiver spurious response, field propagation and lobing, and antenna spacing and frequency separation. Section 2 provides typical evaluation procedures for use as aids to examine interference problems and their solutions in greater depth.

SECTION 1. RCF AIR-TO-GROUND FACILITY ANTENNA REQUIREMENTS

2. **GENERAL.** The horizontal/vertical antenna radiation patterns, receiver desensitization, and available receiver input level are interrelated and collectively contribute to the phenomenon of dropout of the receiver radio signal.

3. **ANTENNA PATTERN DISTORTION.** When a radiating antenna is located near another antenna, or conducting objects such as a lightning rod, currents from the radiating antenna are induced in the second antenna and reradiated. The sum, or difference in these two propagated fields, results in a change in radiated power in any given direction. This causes a variation of far-field coverage, or in worst case, signal dropout. Using 8 feet or more spacing between antenna-to-antenna or lightning rod (air terminal) minimizes the effect.

a. **Pattern Distortion.** The phase difference between the radiation from two antennas, active or parasitic, has a resultant far-field or Fraunhofer pattern that is characterized by disturbances in gain with respect to the ideal omni directional pattern of constant gain. This phenomenon is termed pattern distortion. The measure of pattern distortion is defined as the difference between the free-space omni directional gain of an antenna when other antennas are present. Only the gain in the horizontal plane is considered. See Figure 7, Antenna Pattern Distortion in the Horizontal Plane. The distortion parameter L_{pd} is defined by:

$L_{pd} = G_{fs} - G_{min}$

where: G_{fs} = free-space gain in dBi 38 + 20 LOG (FxD)

G_{min} = minimum gain of the horizontal pattern

F = Frequency in MHz

D = Distance in nautical miles or decimal portion of a nautical mile

FIGURE 7. ANTENNA PATTERN DISTORTION IN THE HORIZONTAL PLANE

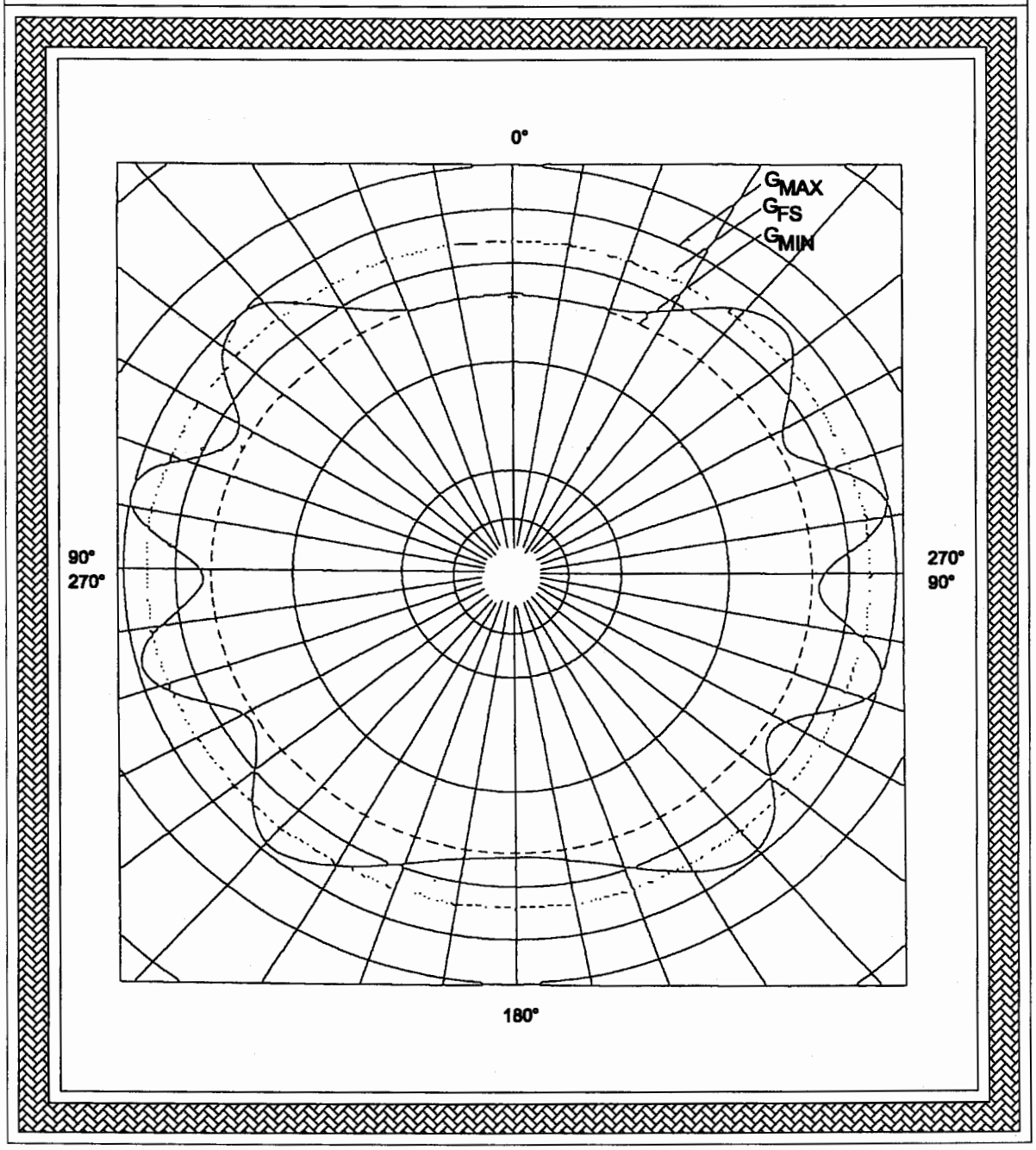

b. **Antenna Pattern Distortion Parameter.** The antenna pattern distortion parameter has been developed from statistical analysis of available data on antenna pattern distortion and is used to analyze various closely spaced antenna configurations. In order to reduce pattern distortion to acceptable limits, it may be necessary to relocate and/or rearrange antennas at a site to achieve greater physical separation. In analyzing parallel and/or elevated antenna configurations, an additional factor comes into play; it is called antenna aperture correction. This factor is applied to the basic pattern distortion plane. The overall effect of the antenna aperture correction-factor is to reduce the degree of the overall effect of pattern distortion. Further discussion of pattern distortion and antenna aperture correction is contained in section 2 of this appendix.

c. **Lobing and Curvature Effect.** Vertical lobing and earth curvature are the major problems in trying to provide -87 dBm throughout the Air Traffic required service volume. See Appendix 6, Vertical Lobing for detailed derivation.

(1) Low Angle Vertical lobing equation = dB = 20 Log[21 sin (a^o sin θ)]

a^o = Height to feed point of the antenna above ground in electrical degrees
θ = Vertical angle above the horizon
AH = Antenna feed point above ground in feet
AC = 300 x 3.28 / Frequency in MHz
a^o = (AH x 360)/AC

(2) Radio Earth Equations:

Radio antenna line-of-sight N miles = 1.225 X $[(H_1)^{1/2} + (H_2)^{1/2}]$
H_1 = Ground antenna height in feet above site elevation
H_2 = Aircraft height in feet above site elevation

(3) Radio Earth Curvature = H feet $H_{ft} = D^2 \div 2$

D = statute miles between the site and aircraft - [1.225 X $(H_1)^{1/2}$] X 1.516
Nautical Miles x 1.1516 = Statute Miles

4. **RECEIVER DESENSITIZATION.** Receiver desensitization is one of the more serious interference problems associated with the operation of radio transmitters and receivers close to each other. Desensitization can be caused by any transmitter operating on a frequency other than the desired signal frequency. The signal causing the desensitization penetrates the front end of the affected receiver, alters the controlling bias voltages,

and results in reduced receiver sensitivity. Keep 120 feet of space between transmitter and receiver antennas to minimize effects. Refer to paragraph 3, figure 9, figure 10, and appendix 8 for more information on receiver desensitization.

5. **TRANSMITTER INTERMODULATION PRODUCT INTERFERENCE.** In general, the output amplifier is the nonlinear component in which most transmitter intermods are generated. However, any nonlinear device can be a mixing agent for intermodulation products. These include such things as loose or corroded joints between two conductors, obstruction light filaments, lightning arrester blocks on telephone lines, and even the front end of the receiver itself.

a. **Transmitter Final Amplifier Generated Intermodulation.** Intermodulation interference signals generated in the final amplifier of a transmitter usually involve one or more offending signals external to the transmitter and travel backward along the output coaxial cable from the transmit antenna. The signals reach the final amplifier and combine with each of the transmitter's signals. The resultant interference signal then travels back on the output cable to the antenna to be radiated.

b. **Typical Transmitter Intermodulation.** Figure 8, Typical Transmitter Intermodulation situation, depicts transmitter intermodulation as experienced by the FAA at some locations. In figure 8, the fundamental frequency (125 MHz) of transmitter number 1 enters transmitter number 2 through its antenna system and mixes with the second harmonic of the fundamental transmitter number 2 (130 MHz) to form a third order product (2F2 -F1). The resulting intermodulation product (135 MHz) appears at receiver number 3 on the desired signal frequency. The basic trade off factors for reducing this form of interference are spacing between transmit antennas, spacing between transmit and receive antennas, and the use of isolation devices such as cavities and/or ferrite isolators.

FIGURE 8. TYPICAL TRANSMITTER INTERMODULATION SITUATION

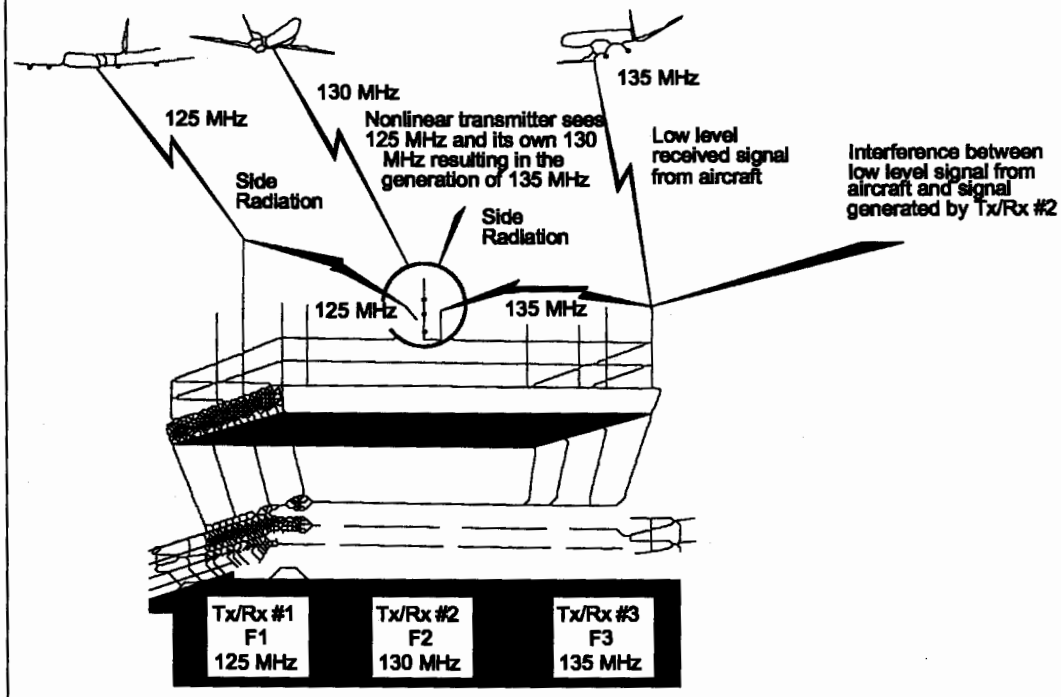

c. **Frequency Management.** The best way to minimize transmitter IM product interference is through frequency management. However, as the requirement for collocated communications channels increases, the possibility of finding compatible frequency combinations decreases. When compatible frequencies cannot be found and large antenna separations cannot be implemented, bandpass cavity filters, ferrite isolators, cavity notch filters and transmitter combiners may be required between each transmitter and its antenna to reduce IM to -104 dBm or less.

6. **RECEIVER SPURIOUS RESPONSE.** When receivers have insufficient front-end selectivity between the antenna input and the first mixer, interference can be caused by adjacent transmitters, or nearby VHF frequency modulated broadcast transmitters.

a. **Adjacent Transmitter Interference.** If the output frequency of the transmitter penetrates the front-end of the receiver and combines with the local oscillator, spurious signals may be produced that fall within the passband of the receiver. If the interference is weak, it can be heard only when a desired signal breaks the preset squelch level.

b. **VHF Frequency Modulation Broadcast Transmitter Interface.** Interference can be caused by nearby frequency modulation broadcast transmitters operating on frequencies that duplicate local oscillator fundamental frequencies. A 5,000 watt transmitter located approximately one mile away or less can penetrate some receiver front- ends at broadcast frequency and mix with the receiver local oscillator. A spurious signal is produced for every multiple of the broadcast station frequency, both above and below the oscillator frequency.

c. **Elimination of Receiver Serious Response Interference.** Receiver spurious response interference from adjacent communications transmitters can be minimized by following the same procedures used for receiver desensitization. Interference from a broadcast station can be eliminated by locating A/G communications receivers several miles from any broadcast station. Alternatively, bandpass or notch cavity filter and crystal filter devices can be used. Note that aircraft receivers are susceptible to RFI and front-end overload from commercial broadcast emission.

7. **INTERMODULATION SPURIOUS RESPONSE.** One of the most prevalent causes of interference in a receiver is intermodulation spurious response. This occurs when two or more strong off-channel signals generate intermodulation products. If one of these products coincides with the operating frequency of the receiver, interference results. The intermodulation process takes place in the RF amplifier of a receiver when it operates in a nonlinear mode, or in the first mixer, which must have nonlinear characteristics in order to perform as a mixer.

a. **Receiver Selectivity.** FAA receivers should have sufficient selectivity to operate without interference under the following conditions:

transmitters on VHF frequencies equal to or greater than ± 500 kHz and for UHF frequencies equal to or greater than 1 MHz, from the receiver frequency. The selectivity for VHF AM receivers should be approximately ± 9 kHz at 6 dB and ± 18 kHz at 60 dB. Front end selectivity should offer approximately 100 dB rejection to frequencies ± 500 kHz/VHF, ± 1 MHz and greater.

b. Radio Frequency Interference Product. These products should be eliminated by frequency assignment action when they involve harmonics, image frequency, or fundamental frequency mixes that have products on local frequencies.

8. FAR-FIELD PROPAGATION AND LOBING.

a. Propagation (Space) Loss. Far-field propagation loss can be determined from VHF and UHF propagation charts in Order 6050.32, Spectrum Management and Procedures Manual and ESSA Technical Report ERL-111-ITS-79. Space attenuation data from these charts can be used to determine signal margins available in various A/G communications facilities and an aircraft at the outer limit of each service volume is used. Note that flight inspection requirement is -93 dBm or 5 uV at the aircraft receiver input throughout the service volume for both VHF and UHF.

b. Preliminary Facility Planning Phase. Section 2 of this appendix contains graphs for checking antenna pattern distortion, receiver desensitization, and transmitter intermodulation during the preliminary facility planning phase. In developing the graphs, a nominal gain/loss factor of 0.0 dB was assumed for an antenna and coaxial feeder system.

c. Vertical Lobing. Far-field lobing of the vertical antenna pattern affects transmission coverage. Vertical lobing is a function of aircraft altitude, facility antenna height, frequency and ground conductivity. Antenna heights at a facility must be limited to achieve gapless radio transmission (coverage in the deepest vertical null) at the limits of the service volume. Appendix 6, discusses vertical lobing more thoroughly. The discussion recommends antenna heights for terminal and en route service volumes.

9. reserved.

10. reserved.

11. reserved.

12. reserved.

13. reserved.

14. reserved.

SECTION 2. TECHNIQUES FOR EVALUATING ANTENNA CONFIGURATIONS AT A/G FACILITIES

15. GENERAL. The major portion of this section is devoted to special techniques for evaluating antenna pattern distortion (lobing), receiver desensitization, and transmitter intermodulation interference. These three factors have the greatest influence on A/G communications at any facility.

a. Receiver Interference Factors. To cope with receiver interference factors, special curves have been developed for this RCF Installation Handbook. These curves will enable an engineer to evaluate pattern distortion effects between (1) antennas mounted in the same plane or staggered, (2) antennas and air terminals; (3) receiver desensitization for various transmitter and receiver antenna separations; (4) space separations between transmit and receive antennas; and (5) transmitter intermodulation interference relative to squelch level, service volume, frequency separation, and antenna spacing.

b. Evaluation Techniques. The techniques presented permit any antenna configuration associated with an A/G communications system at any FAA facility to be evaluated relative to its intended service. The techniques provide information on system performance in terms of the three main factors which can be traded off to develop an optimum antenna configuration. Basic antenna configurations can be evaluated to identify areas needing improvement; alternate configurations can be evaluated to determine the degree of improvement the areas would provide.

c. Qualitative Judgments. In evaluating results from an analysis, the operational reliability required at any given facility, relative to the current and potential activity level and type of service, should be considered. These factors could be quantified by means of an activity analysis, but this is beyond the scope of this order. Instead, qualitative judgments can be made as to the need to arrange antennas to avoid undesired effects identified by the techniques presented herein.

16. ESTIMATING ANTENNA PATTERN DISTORTION. Antenna pattern distortion can be estimated by considering the effect of each antenna or conducting element (for example, an air terminal) in each group of antennas at a facility.

a. Antenna Spacing to Avoid Antenna Pattern Distortion. Wherever practical, a minimum of 8 feet spacing between the antenna and the supporting tower, air terminals, or other towers should be maintained to avoid antenna distortion caused by scattering from the supporting tower, air terminals, and other antennas.

b. Multiple Antenna Radiation Pattern Interreaction. A single vertical distortion caused by scattering from the supporting tower, air terminals, and radiators located in an area clear of other antennas and vertical conducting objects is considered to have an omnidirectional or circular

radiation pattern in the horizontal plane. When a second antenna is placed nearby, the radiation pattern of the first antenna exhibits dips and peaks which vary above and below the nominal value of the original circular pattern. The amplitude of the dips varies with frequency and antenna aperture in addition to distortion.

17. RECEIVER DESENSITIZATION CALCULATIONS. Receiver desensitization is calculated as a function of distance between transmitting and receiving antennas and of frequency separation between desired and interfering signals. The distance between transmit and receive antennas which prevents desensitization varies with the output power of the interfering transmitter and the off-frequency front-end attenuation characteristics of the receiver.

a. Receiver Filters. Bandpass or notch cavity filters that increase the off-frequency attenuation capability of the receiver to decrease receiver desensitization are recommended where close spacing of transmit and receive antennas cannot be avoided. Receiver desensitization can also be decreased by using equipment similar to feed forward phase cancellation devices.

b. Transmit-to-Receive Antenna Spacing. Figures 9 and 10, Receiver Desensitization diagrams the distances, in feet, between transmit and receive antennas which are required to prevent VHF/UHF receiver desensitization for various frequency differences between desired and undesired signals. These curves were developed by subtracting the receiver's specified front-end attenuation from the total attenuation required to reduce a transmitted power level of 40 dBm (10 Watt) or 47 dBm (50 Watt) to a reference power level of -97.5 dBm (receiver squelch level). The required remaining attenuation was then converted from space loss (in dB) to distance (in feet). Transmitter to receiver antenna spacing for stated frequency separations that appear above these curves are considered to be free from receiver desensitization effects. The recommended spacing is 120 feet.

18. MODULATION PRODUCT INTERFERENCE CALCULATIONS. (See Appendix H for detailed derivation). Transmitter IM product interference occurs, at a communications facility, when two or more assigned frequencies produce intermodulation products on the desired frequency of one or more active receive channels. Frequency management normally avoids these frequency combinations whenever possible. However, there is a finite limit on the number of available channel frequencies for any specific communications service in any FAA region. Therefore, transmitter IM product frequency combinations cannot always be circumvented. When this form of interference is inevitable, it can usually be reduced to an acceptable level by proper spatial separations between transmit antennas, between transmit and receive antennas, and through the proper use of tuned cavity filters and ferrite isolators.

FIGURE 9. VHF RECEIVER DESENSITIZATION

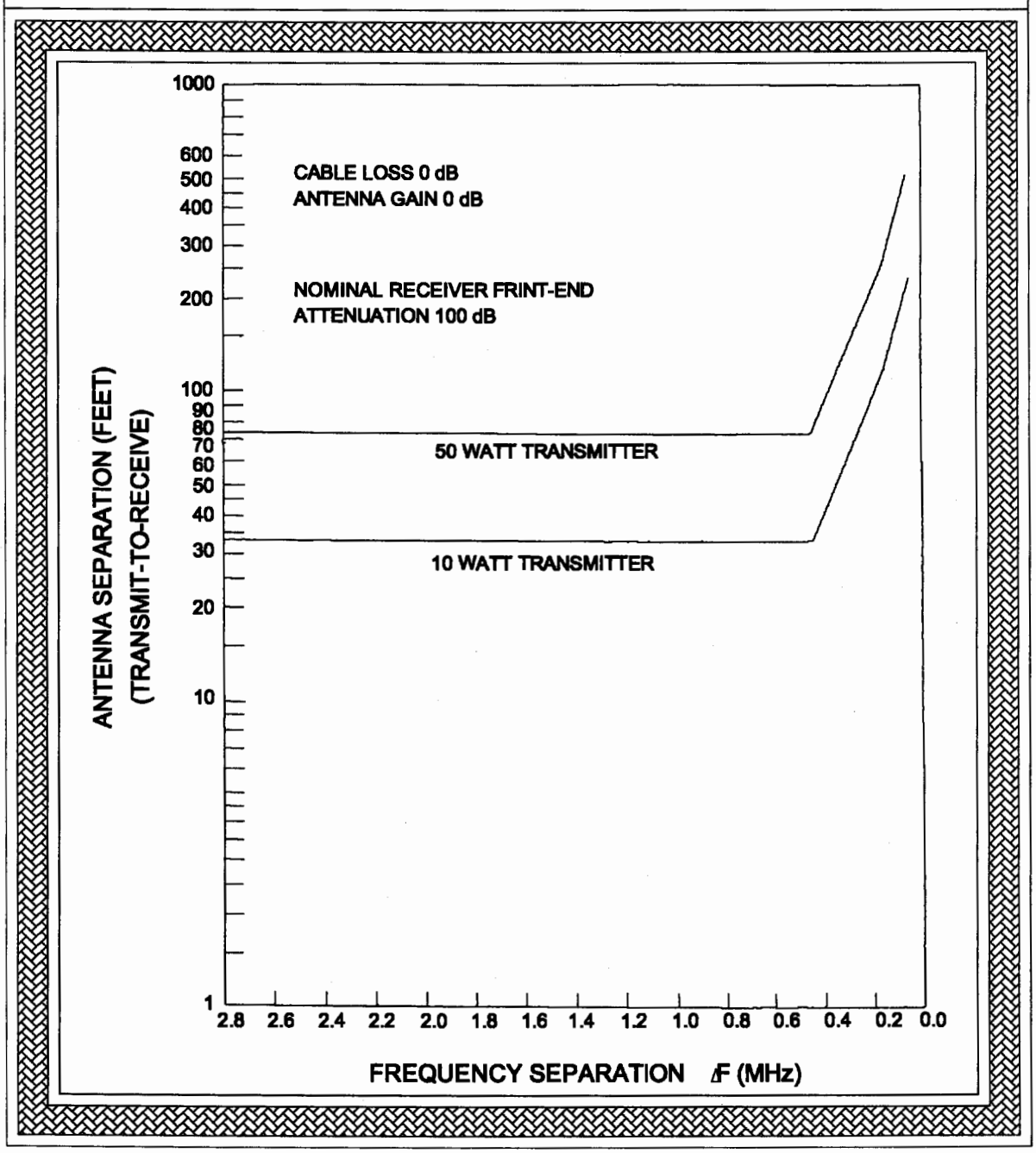

FIGURE 10. UHF RECEIVER DESENSITIZATION

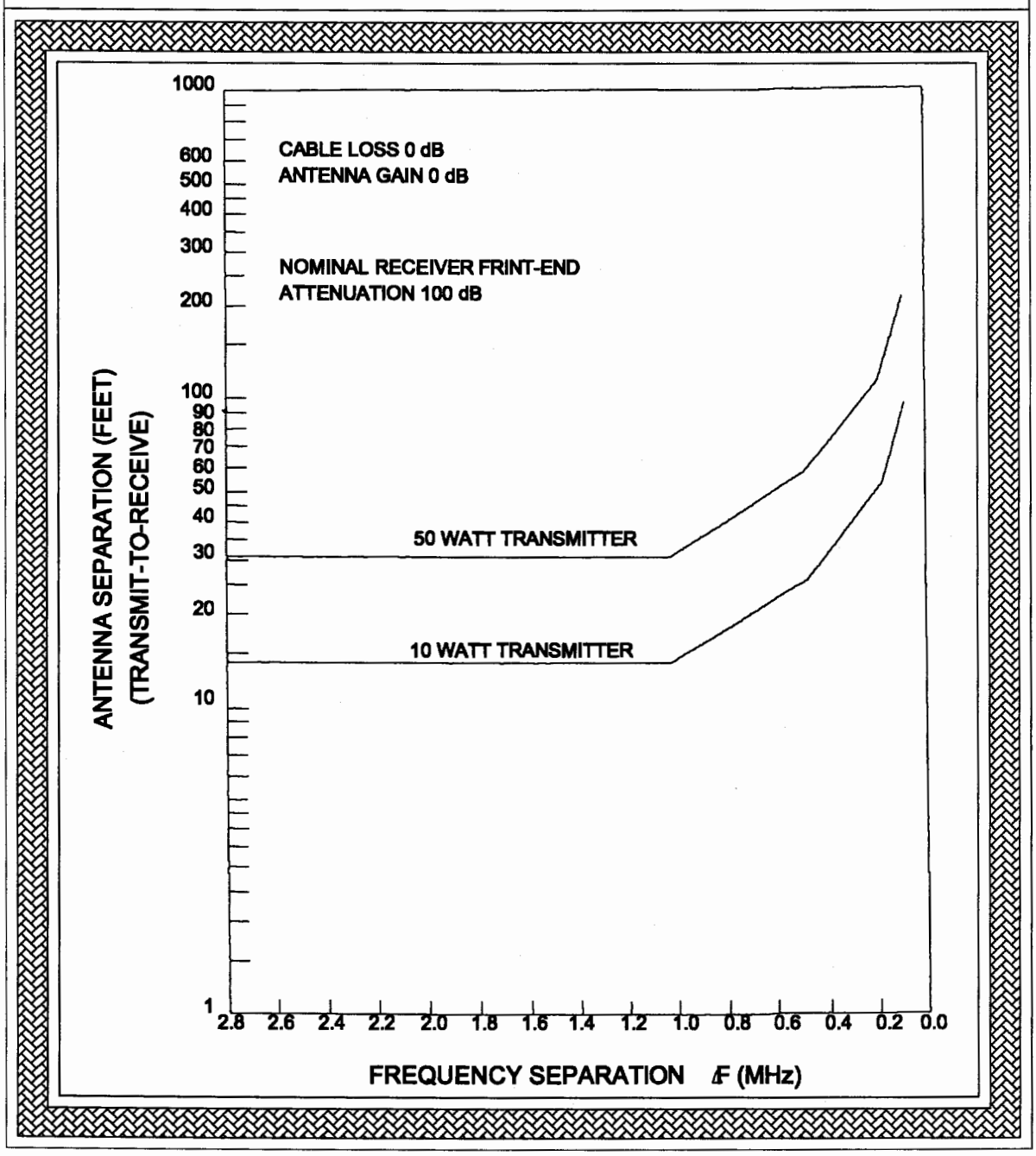

a. **Tuned Cavity Filters and Ferrite Isolators.** Tuned cavity filters (cavity bandpass, notch or cavity combiner) and ferrite isolators may be used in the transmitter output to reduce the interference. Broad band ferrite isolators are effective regardless of the frequency separation between offending transmitters, whereas tuned cavity filters may require a frequency separation in excess of 1 MHz in order to be effective without causing excessive insertion loss. When space is limited, various combinations of antenna spacing and ferrite isolators can be combined to eliminate or reduce transmitter IM product interference to an acceptable level. Figure graphs herein designed to assist in planning for the elimination or reduction of IM product interference, were previously developed using 10 watt and 50 watt VHF and UHF transmitters.

b. **Reducing Intermodulation Product Interference.** Figure 11 through figure 14, provide graphic curves for 10 watt VHF and 10 watt UHF transmitters with and without tuned finals. The third order intermodulation product generated in an untuned transmitter will be approximately 22 dB below the lowest transmitter carrier level presented at the final RF amplifier. With tuned finals, there is an additional attenuation to external transmitter emissions that varies with frequency separation as follows: approximately 24 dB (0.5 MHz frequency separation) to 70 dB (5.0 MHz frequency separation). Therefore, the curves are presented according to the amount of interference reduction acceptable for the service volume signal requirements of terminal and en route facilities.

c. **Antenna Spacing Calculations Without Ferrite Isolators.** In figures 11 and 12, the lines show required spacing for antennas with and without the use of ferrite isolators. The graphic curves (-111.5 dBm) provide 14 dB desired to undesired signal ratio for terminal and en route facilities. Figures 13 and 14 present the same information for UHF transmitters.

d. **Antenna Spacing Trade Offs.** Figures 15 and 16 were developed for use with 50 watt VHF and UHF cavity tuned LPAs. The graphic curves in those figures show antenna spacing required to reduce transmitter IM interference to 14 dB below the squelch threshold level (-97.5 dBm) to -111.5 dBm with various frequency separations. These two figures make it possible for a field engineer, when analyzing antenna configurations, to perform trade offs in spacing to reduce IM interference referring to figure 15, assume that IM products are occurring between 50 watt transmitters separated by 5 MHz. If the transmitter antennas are separated by 10 feet, the transmit-to-receive antenna spacing must be 150 feet. The elimination of transmitter IM interference usually will require greater antenna separation than that necessary to eliminate receiver desensitization. The latter will be accomplished in the process of eliminating transmitter IM interference. In some cases, ferrite isolators can be used to reduce transmitter IM interference and to permit closer spacing of antennas. Receiver desensitization should be checked independently.

NOTE: The curves on figures 11 through 16 are used to perform rapid preliminary estimates of transmitter IM product interference and examination of possible remedies.

The following procedures can be used to verify the results obtained from the graphic curves. Add the four decibel values as follows:

Additional attenuation required (from graph, see NOTE)	_____dB
Transmitter IM attenuation (22 dB untuned, 24 tuned)	_____dB
Transmitter-to-transmitter space loss (figure 17)	_____dB
Transmitter-to-receiver space loss (figure 17)	_____dB
Total should be:	
151.5 ± 3 dB for 10 watt transmitter	_____dB
158.8 ± 3 dB for 50 watt transmitter	_____dB

FIGURE 11. ANTENNA SPACING TO AVOID INTERMODULATION INTERFERENCE (VHF TX - UNTUNED FINAL)

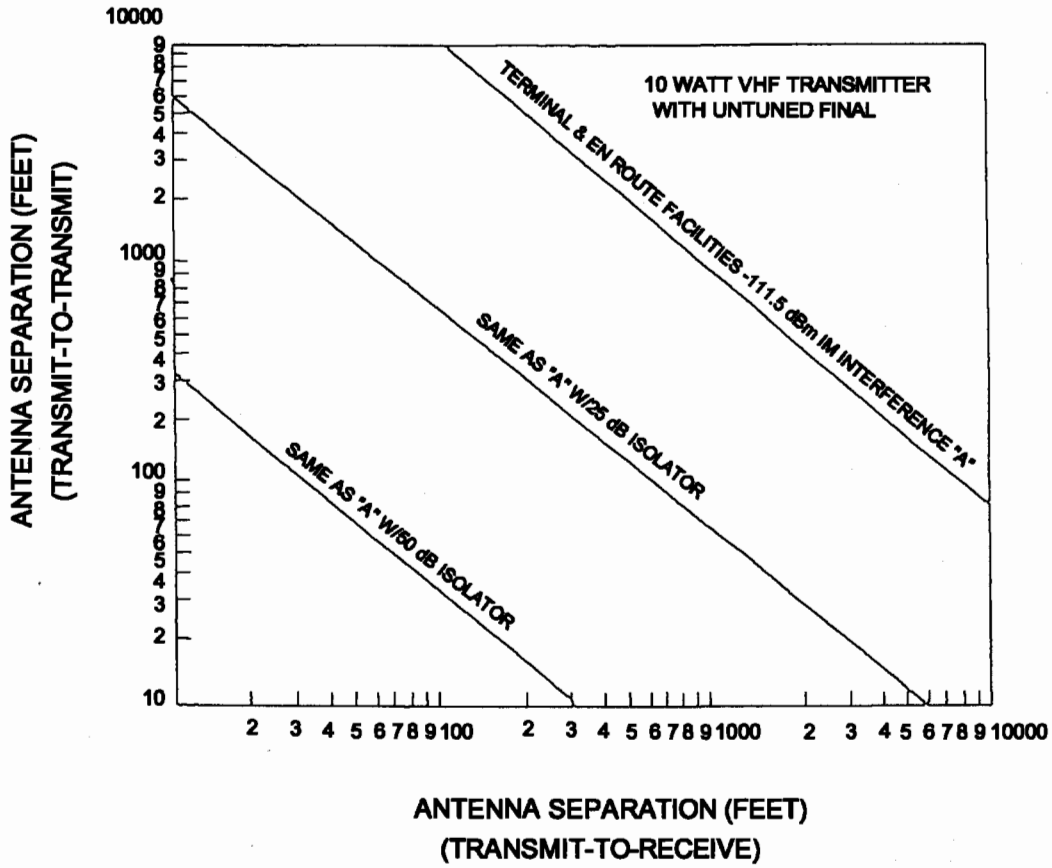

FIGURE 12. ANTENNA SPACING TO AVOID INTERMODULATION INTERFERENCE (VHF TX - TUNED FINAL)

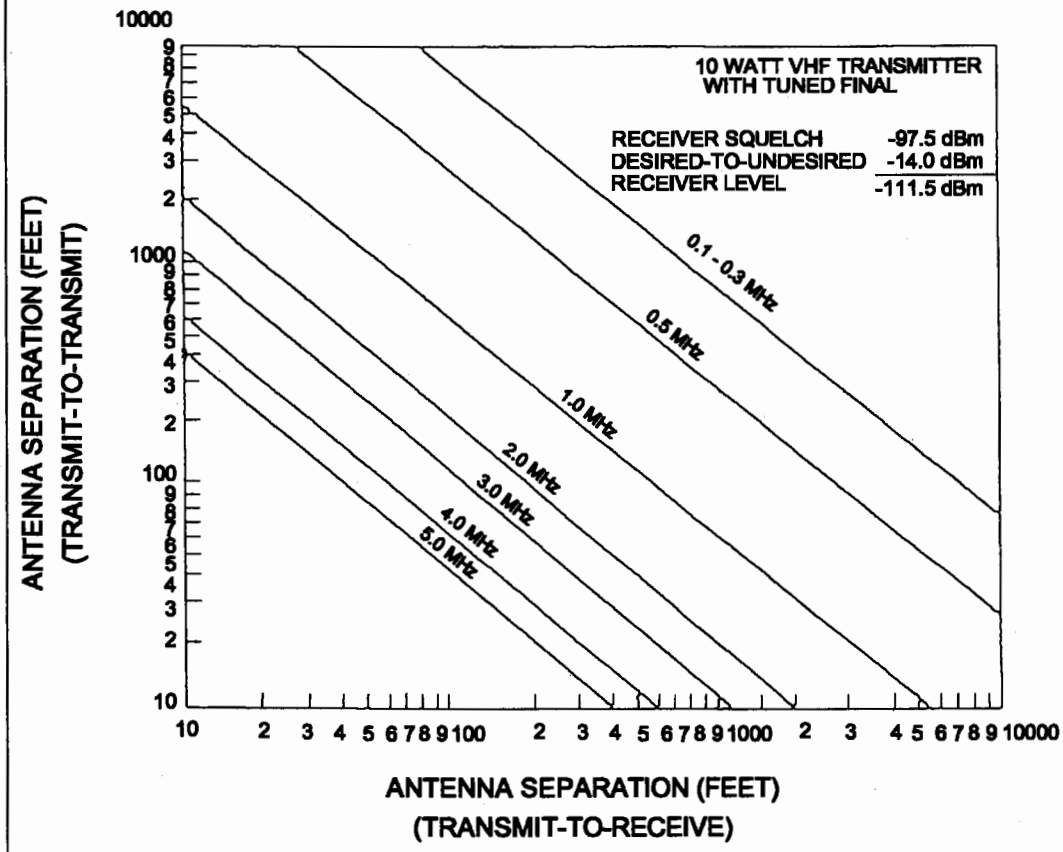

FIGURE 13. ANTENNA SPACING TO AVOID INTERMODULATION INTERFERENCE (UHF TX - UNTUNED FINAL)

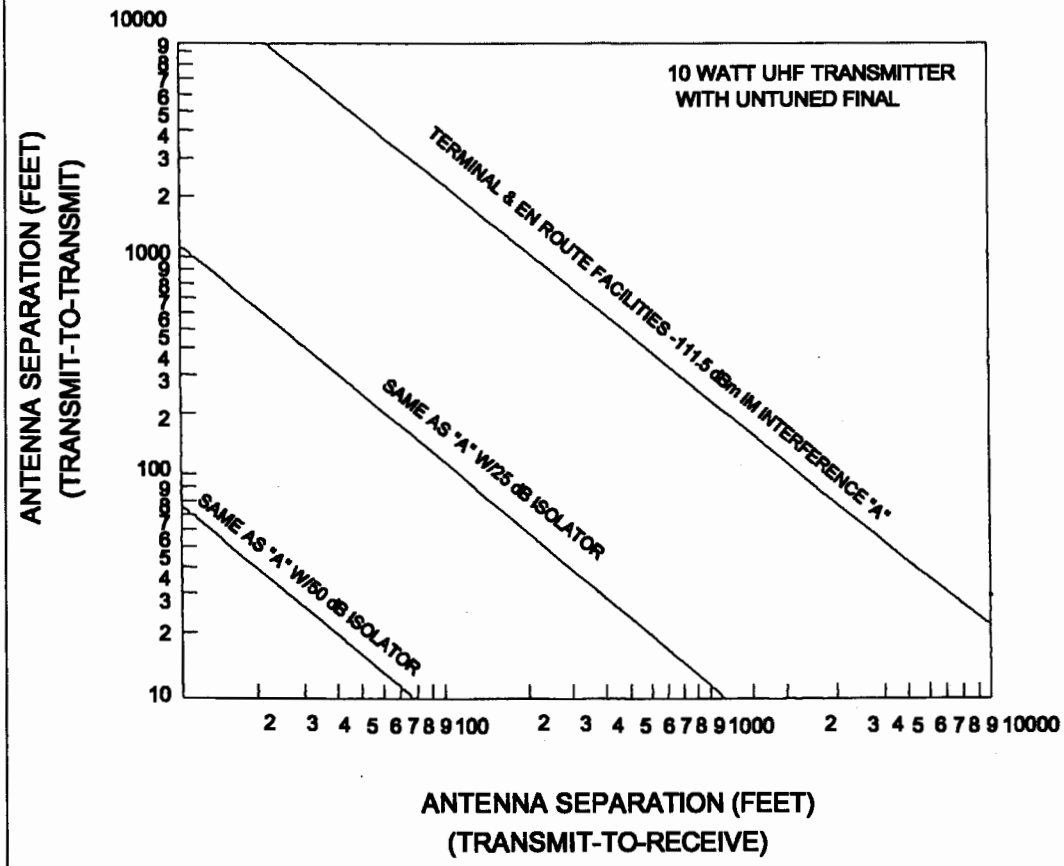

FIGURE 14. ANTENNA SPACING TO AVOID INTERMODULATION INTERFERENCE (UHF TX - TUNED FINAL)

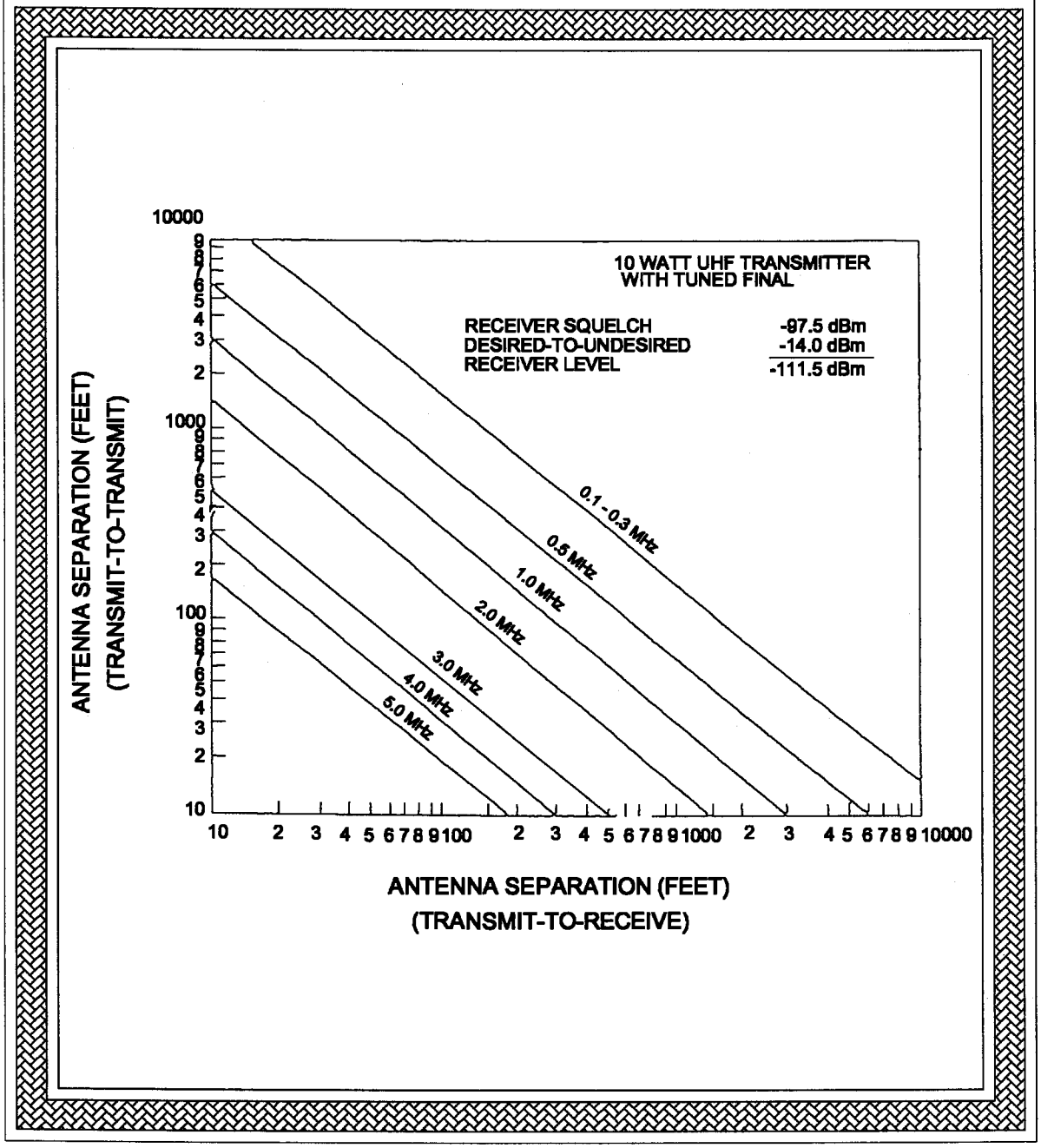

FIGURE 15. ANTENNA SPACING TO AVOID INTERMODULATION INTERFERENCE (VHF TX - LPA WITH TUNED CAVITY)

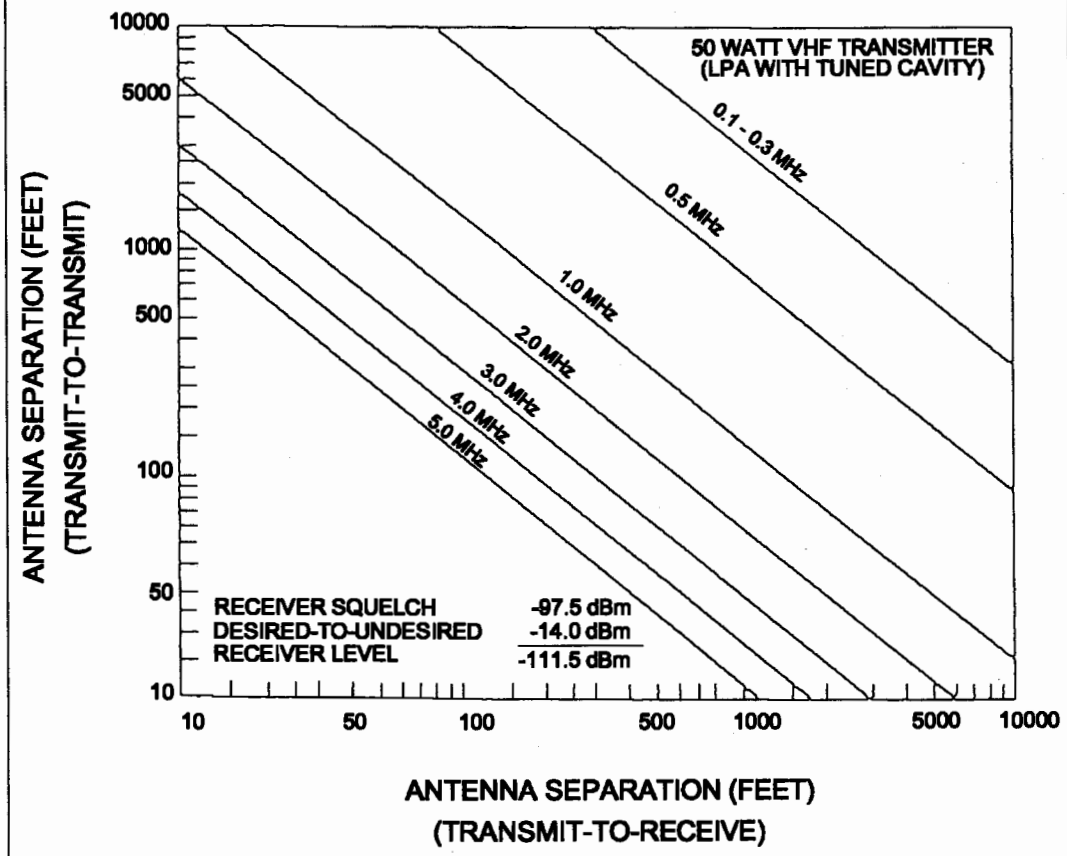

FIGURE 16. ANTENNA SPACING TO AVOID INTERMODULATION INTERFERENCE (UHF TX - LPA WITH TUNED CAVITY)

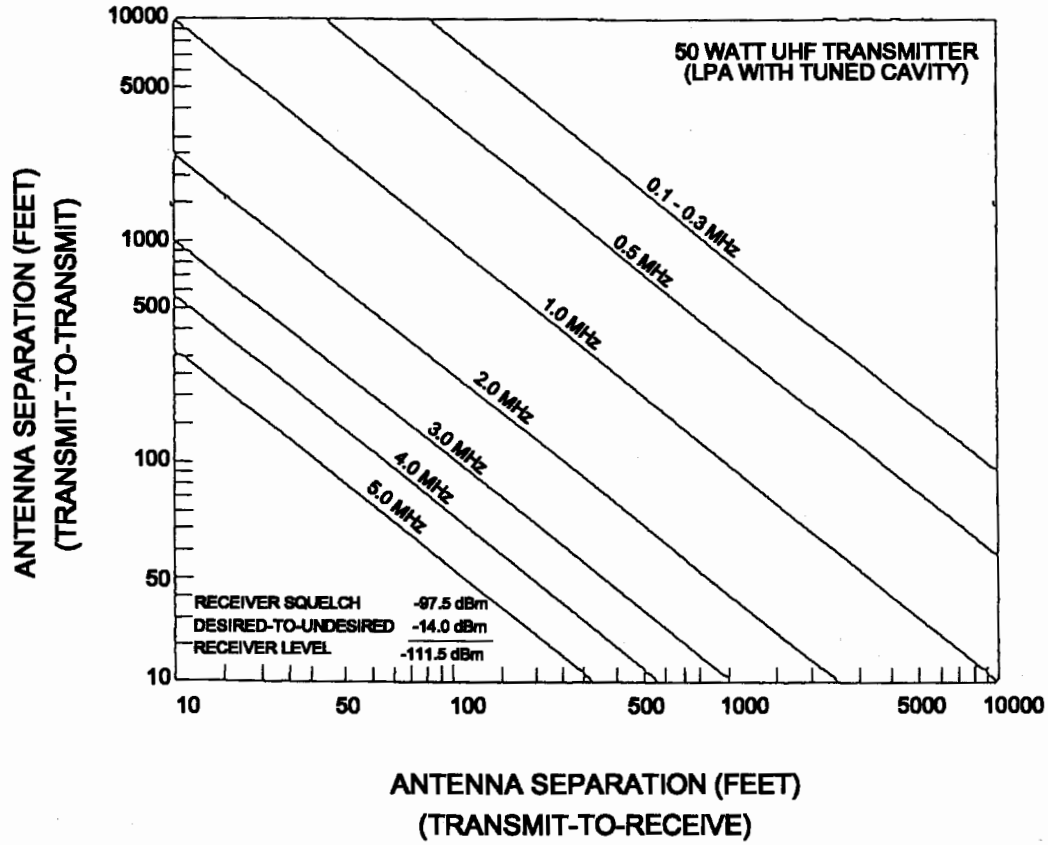

19. ANTENNA SPACING AND FREQUENCY SEPARATION GUIDELINES. See appendix 8 of this document for detailed derivation. The antenna spacing curves for receiver desensitization and transmitter IM product reduction shown in figures 9 through 16, can be used to achieve any degree of freedom from interference. Antenna transmitter-to-receiver spacing for IM reduction is over 10,000 feet, when the two transmitter antennas are within 8 feet of each other. If the interference becomes a problem, ferrite isolators can be added for reduction of transmitter intermodulation product interference. If the antennas are close enough to cause desensitization, filter devices can be added to the receivers. When interference becomes detrimental to critical communications, either the antennas must be moved or new frequency assignments requested.

a. Intermodulation Product Free Space Attenuation. When the intercept is not on a curve, figure 17 interpolates for the decibel value of the transmitter-to-transmitter and transmitter-to-receiver intercept on the IM interference, figures 11 through 16. For example, if the transmitter-to-transmitter distance is 21 feet and the transmitter-to-receiver distance is 80 feet, the intercept is to the left of the 50 dB curve on figure 11 and you will have severe interference even with ferrite isolators. Follow along the 21 foot ordinate (figure 11) to the 50 dB curve and note the distance shown on the abscissa (approximately 154 feet). Using figure 17, convert this distance to decibels (VHF curve, 48 dB). Then convert 80 feet to decibels (42 dB). Take the difference between these values (6 dB) and add it to the 50 dB curve, making the value of the intercept 56 dB. This is the attenuation required to reduce the IM products to -111.5 dBm, taking into account that ferrite isolators are already installed.

> **NOTE:** The IM product interference graphs start with the upper right-hand curve which represents the nominal internal IM product attenuation of the transmitter final amplifier. As additional attenuation is added by using isolators or tuned cavities, the new curves appear to the left. In figures 11 and 13, the attenuation obtained from the curves on the graph indicates the isolator attenuation required to reduce the interference to a level of -111.5 dBm. In figures 12, 14, 15, and 16, the attenuation indicated on these graphs is equivalent to about a single cavity tuned near the point of lowest insertion loss or broadest tuning, and includes the internal IM product loss that is due to the mixing action in the final amplifier. Note that a tuned cavity equally attenuates the incoming signal and the outgoing IM product. Therefore, if a "tuned cavity" chart shows a requirement for 12 dB additional attenuation, the cavity needs to be adjusted only a 6 dB increase in attenuation to accomplish the 12 dB attenuation requirement. The curves on the "tuned cavity" graphs are about halfway between the values for single cavity at 0.5 dB insertion loss and 1.0 dB insertion loss, as shown in table 19 of appendix 8. This reference provides a basis for

judging whether or not retuning may be a logical approach for effectively reducing the IM product level.

b. **Interpolation of IM Product Graphs.** Values other than those represented by the curves on figures 11 through 16 can be obtained by using figure 17 and following the procedure described in paragraph 19a, Intermodulation Product Attenuation Interpolation.

FIGURE 17. INTERMODULATION PRODUCT FREE SPACE ATTENUATION INTERPOLATION GRAPH

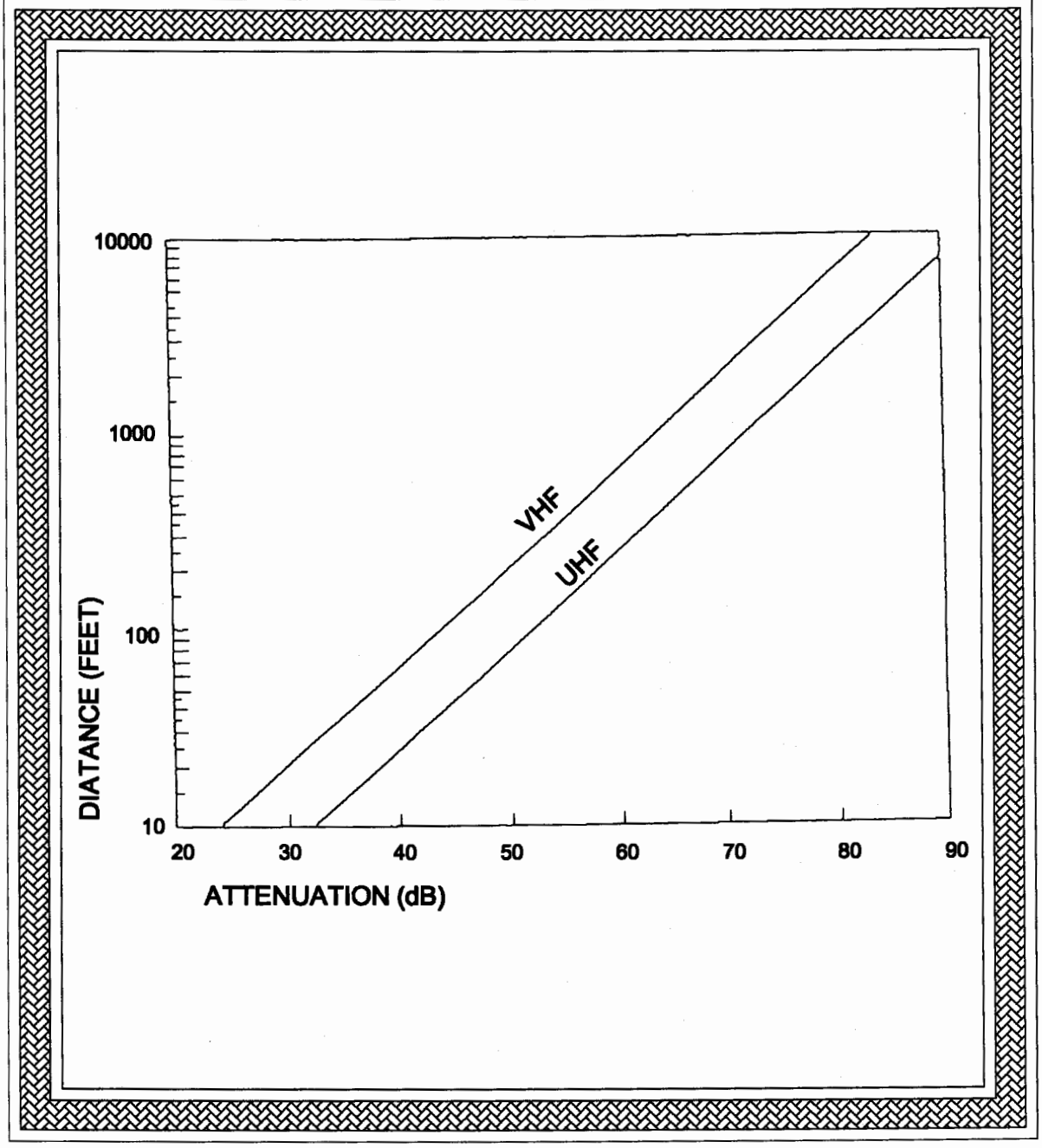

20. **RECEIVER SPURIOUS RESPONSE ELIMINATION.** Spurious products from a receiver are caused by the receiver oscillator spurious products. The frequency of the interfering transmitter must be correct for mixing with the receiver local oscillator spurious product in such a way as to produce a signal at the image frequency of the receiver, or on the desired channel frequency of the receiver.

21. **BROADCAST STATION INTERFERENCE.** VHF/FM broadcast station interference is discussed in paragraph 6 of this appendix. It should be noted that high-powered medium frequency Amplitude Modulated (AM) broadcast transmitters can be the source of the intermodulation products generated at cold solder joints or other nonlinear areas in the receiver antenna or coaxial cable system. Figures 18, 19, 20, and 21 are provided herein for general reference.

22. **reserved.**

23. **reserved.**

24. **reserved.**

25. **reserved.**

FIGURE 18. COMPUTED RECEIVER FRONT-END PROFILE COMPARED TO SPECIFICATION

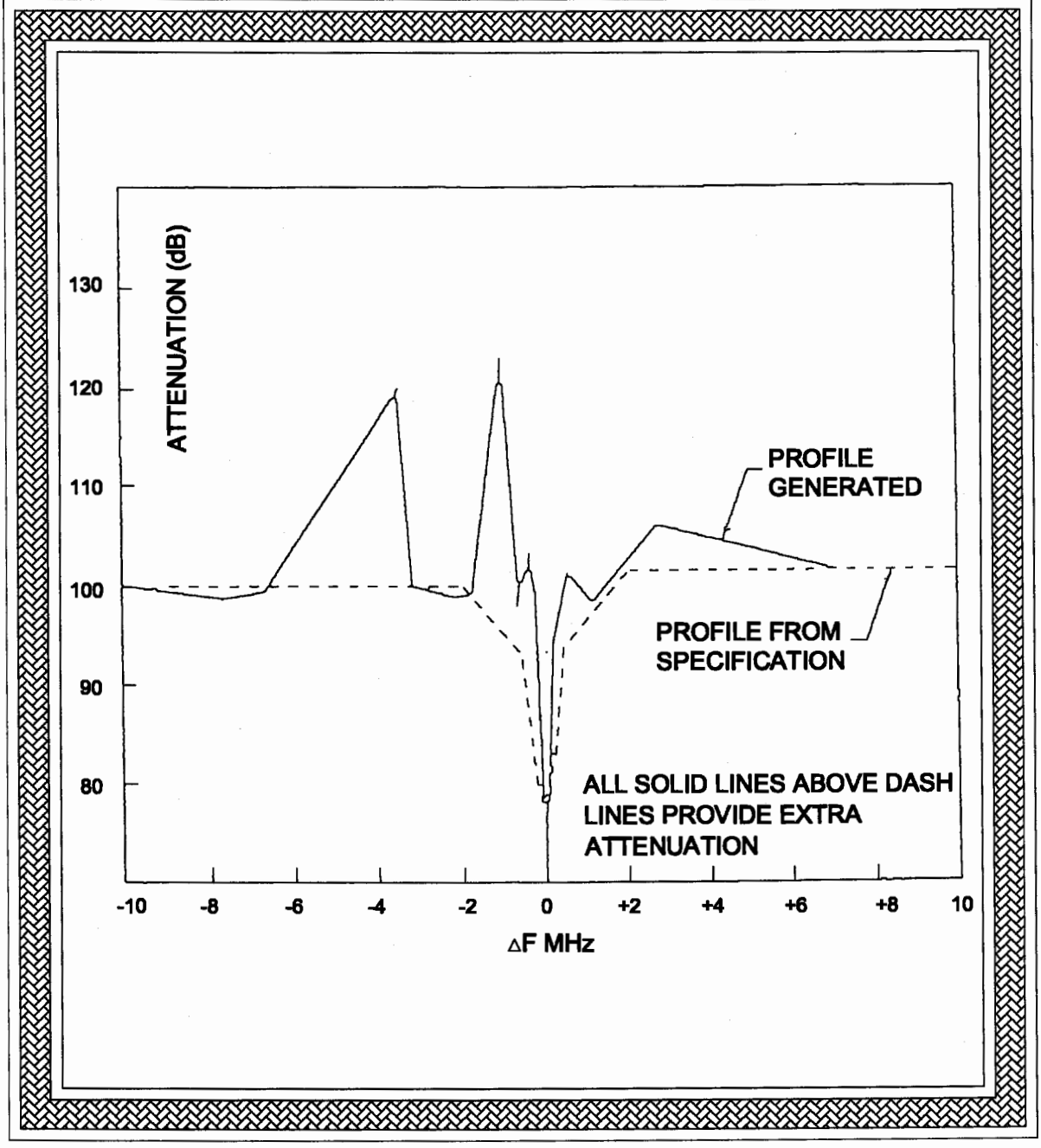

FIGURE 19. TYPICAL PATTERN DISTORTION CAUSED BY ANOTHER ANTENNA

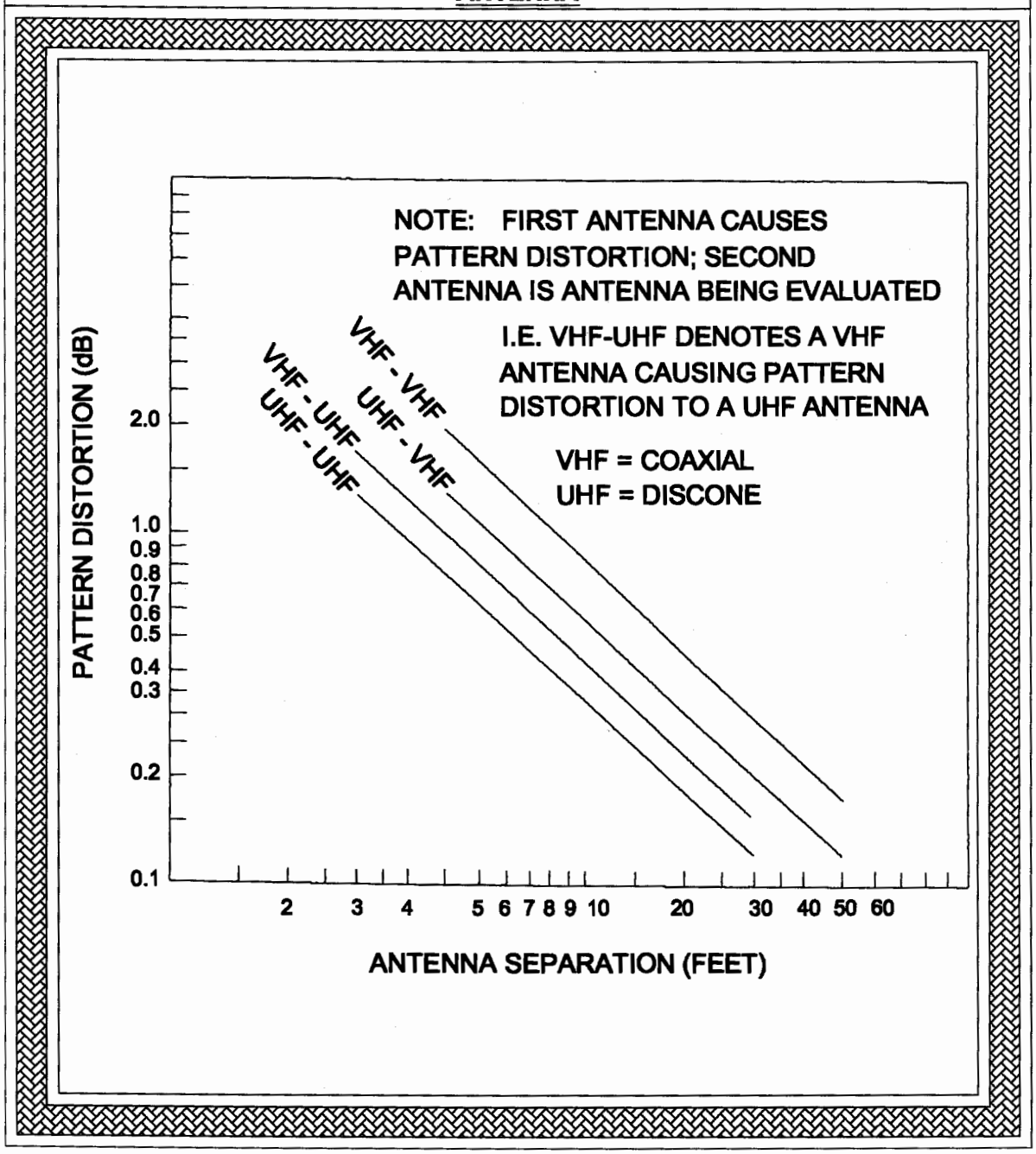

FIGURE 20. SLANT DISTANCE & EFFECTIVE APERTURE FOR STAGGERED ANTENNAS

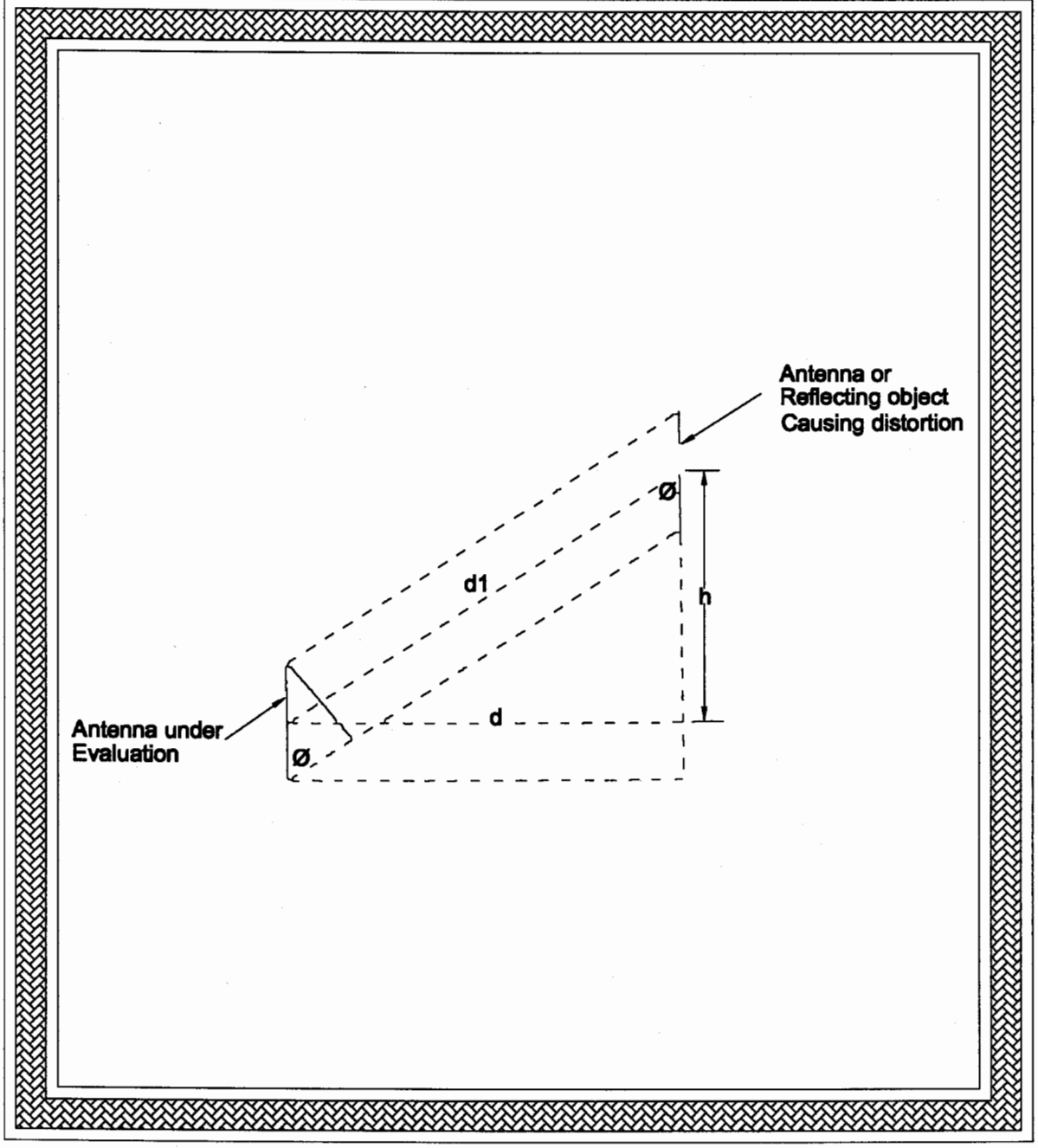

FIGURE 21. TYPICAL PATTERN DISTORTION CAUSED BY A VERTICAL CONDUCTING OBJECT

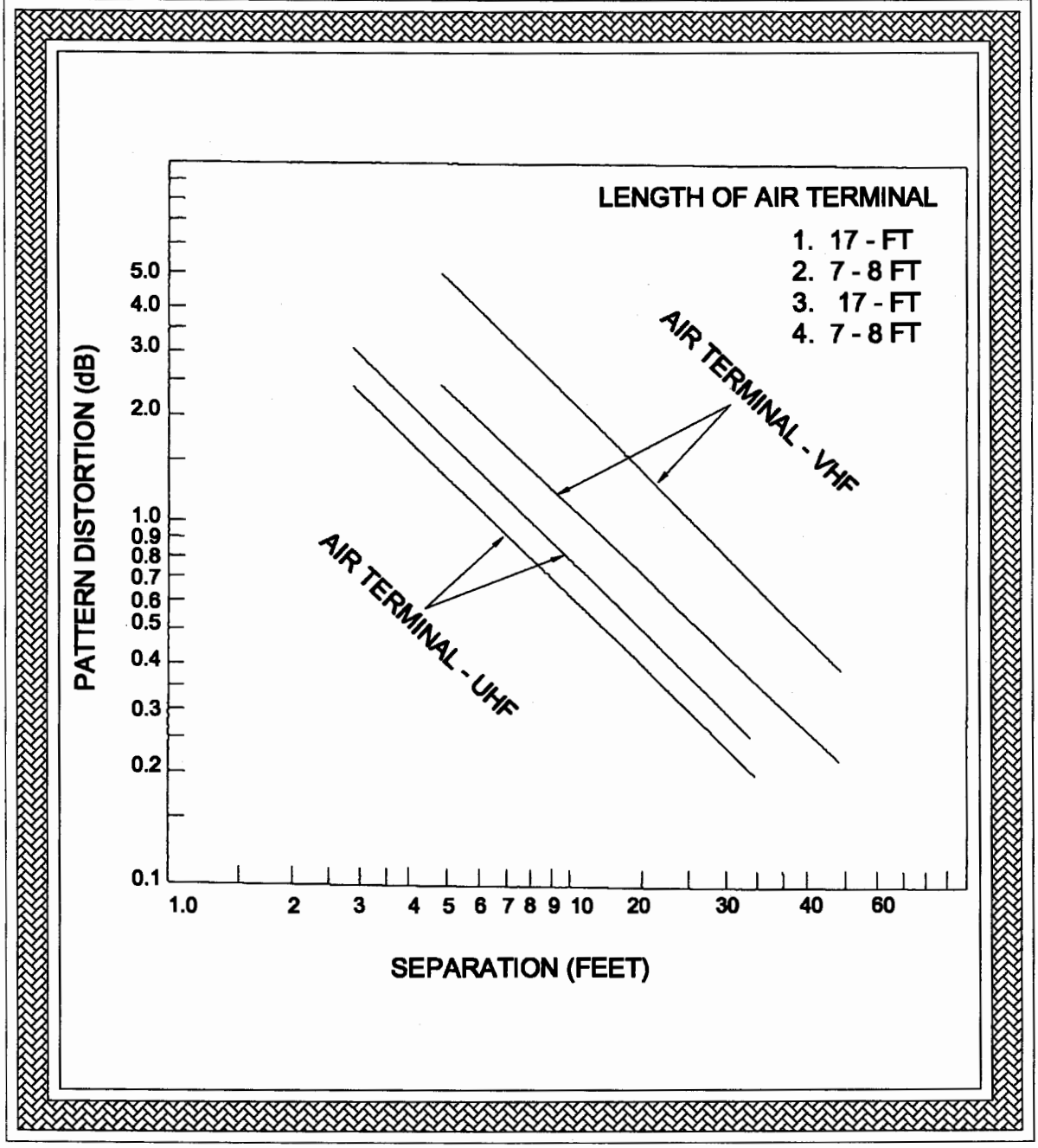

APPENDIX 6. VERTICAL LOBING

1. INTRODUCTION.

a. Purpose. This appendix is to provide a technique for determining a compromise height of a ground-based antenna over various types of terrain which will provide a required quality of communications over a specified volume of airspace.

b. Antenna Pattern Distortion. Vertical lobing is a term applied to antenna distortion caused by propagation to or from a ground-based antenna which travels simultaneously over a desired direct path and a ground-reflected path, shown in Figure 22, Geometry of Direct and Reflected Propagation Paths. When the signals over the two paths are combined, constructive or destructive interference occurs, depending upon the height of the two antennas; the distance between the antennas, antenna efficiency and the terrain characteristics at the ground reflection point; and the transmit frequency. The pattern of peaks and nulls which occurs in any vertical plane appears as vertical loping. If the distortion due to the multiple propagation paths is treated as if it were contained in the ground antenna, then it can be assumed that only a direct path exists between the ground and aircraft antennas. The vertical pattern shown in Figure 23, Example of Vertical Pattern with Vertical Lobing Distortions (shown for Flat Earth), illustrates the effect of combining the vertical loping distortions into a broad antenna pattern.

c. Propagation geometry. Because the geometry of the paths and the properties of the ground reflection point are the same whether the ground antenna is transmitting or receiving energy (law of reciprocity), the vertical lobing pattern shown in figure 23 is identical in shape for both the transmit or receive case. Figure 23 represents a vertical plane through the aircraft and ground antennas. When the ground antenna is transmittance the contour shown represents all points where the aircraft will receive 12 up at the input to its receiver input. This signal level is present when the transmitter power output of the coaxial transmission line feeding the antenna is 6 watts. This appendix describes a method for determining graphically the positions and depths of the nulls in the vertical patterns for a ground transmit antenna. Modification of this technique for the receive case is described in paragraph 4 of this appendix.

2. ASSUMPTIONS AND NOMINAL VALUES.

a. Method parameters. In developing the method to be presented, the following parameters were assumed to make the method particularly applicable to conditions normally found in FAA A/G communications.

FIGURE 22. GEOMETRY OF DIRECT AND REFLECTED PROPAGATION PATHS

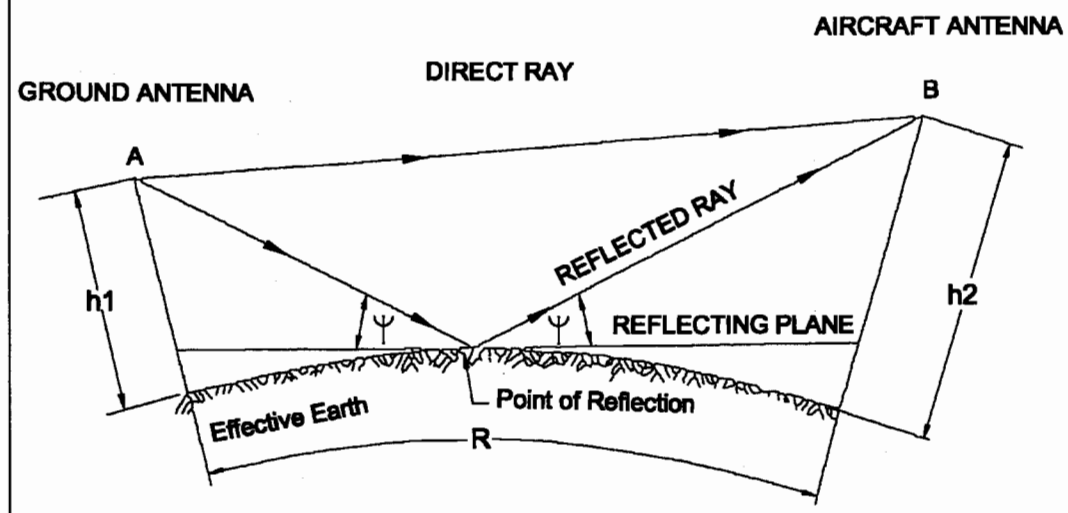

FIGURE 23. EXAMPLE OF VERTICAL PATTERN WITH VERTICAL LOBING DISTORTIONS (SHOWN FOR FLAT EARTH)

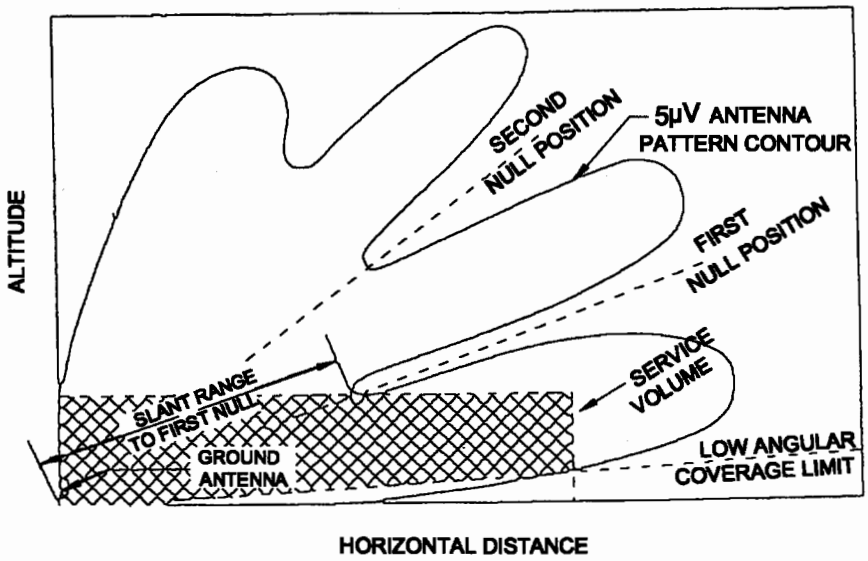

1. LOBES: VHF (127 MHz). ONE LOBE FOR EVERY 4 FEET ANTENNA IS ABOVE THE GROUND AT 20 FEET ABOVE GROUND, THERE WOULD BE FIVE LOBES.

2. LOBES: UHF (330 MHz). THERE WILL BE ONE LOBE GENERATED FOR EVERY 1.5 FEET THE ANTENNA FEED POINT IS LOCATED ABOVE GROUND, I.E., 13.4 LOBES AT 20 FEET.

(1) Vertical polarization

(2) Frequency limits of 118 and 137 MHz.

(3) Spherical earth.

(4) Six classes of reflection material:

(a) Average soil: $\varepsilon_r = 15$, $\sigma = 0.005$ mhos/meter

(b) Dry desert soil: $\varepsilon_r = 2$, $\sigma = 10^{-5}$ mhos/meter

(c) Seawater: $\varepsilon_r = 81$, $\sigma = 5$ mhos/meter

(d) Good ground: $\varepsilon_r = 25$, $\sigma = 0.02$ mhos/meter

(e) Marshland: $\varepsilon_r = 30$, $\sigma = 0.01$ mhos/meter

(f) Freshwater: $\varepsilon_r = 81$, $\sigma = 0.01$ mhos/meter

Where ε is the relative dielectric constant and σ is the conductivity of the soil.

(5) Receiver input impedance of 50 ohms.

(6) Communications with aircraft under 0.09 degree above the horizon will not be considered. The angle from a site at 1,000 feet Above Mean Sea Level (AMSL) to an aircraft at 130 nautical miles and 18,000 feet AMSL is 0.49 degrees. For an aircraft at 40 nautical wiles and 1,000 feet above the site, the vertical angle is 0.09 degrees.

b. The graphs developed for this appendix are based upon assumed nominal values illustrated in Figure 24, Nominal Values for a Communications Link, and identified as follows:

(1) A terminal facility with a rated transmitter power of 10 watts with associated losses which reduce the power to 6 watts at the output to the coaxial transmission line feeding the transmit antenna.

(2) A system loss (at the transmitter plus that at the receiver) of 6 dB, as illustrated in figure 24.

(3) A required minimum receiver input voltage of 12 uV. Since this voltage is four times the normal 3 uV squelch setting, the requirement of 12 uV input to the receiver represents a 12 dB systems margin (or safety factor) in received signal level.

FIGURE 24. NOMINAL VALUES FOR A COMMUNICATIONS LINK

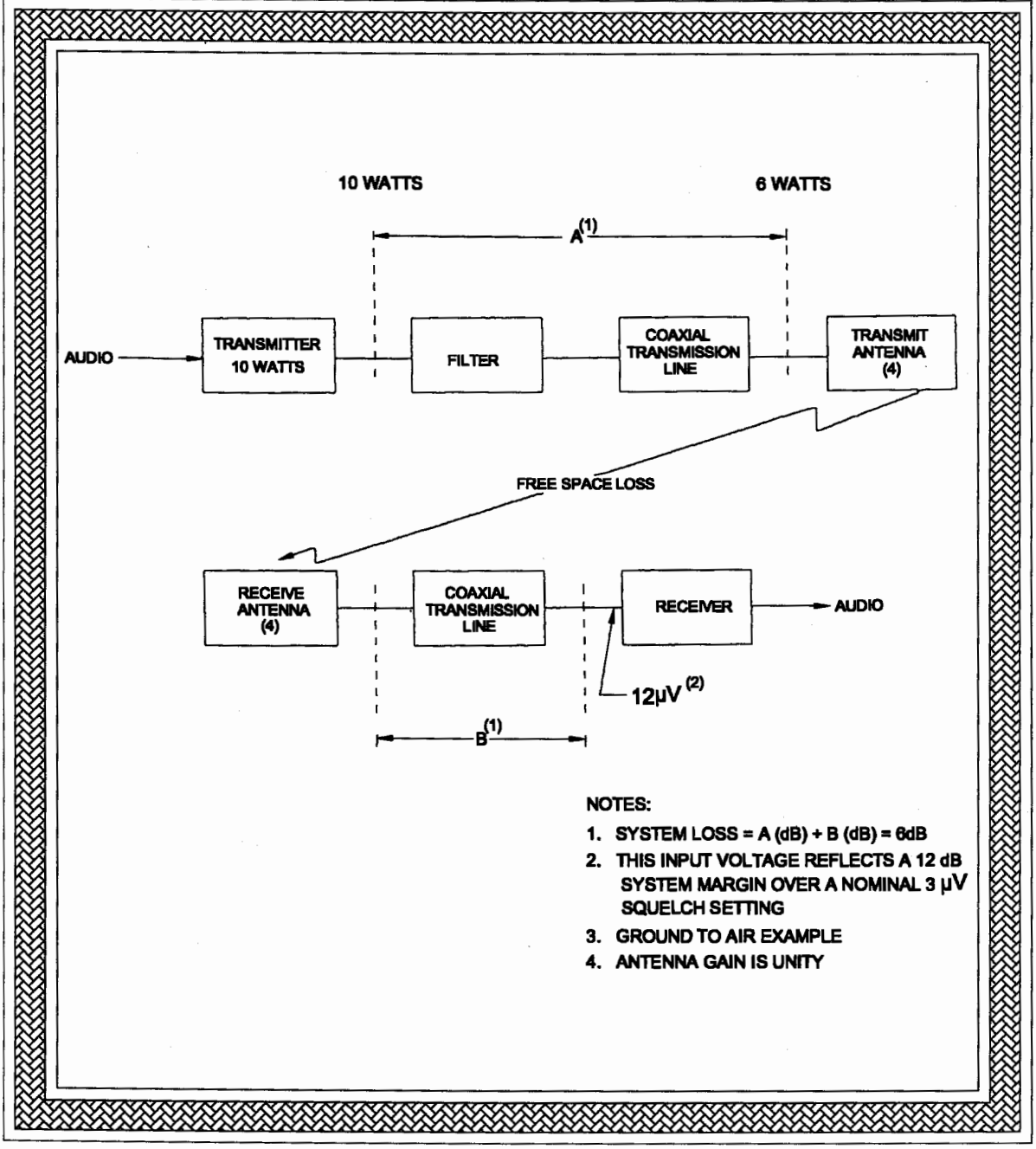

NOTES:

1. SYSTEM LOSS = A (dB) + B (dB) = 6dB
2. THIS INPUT VOLTAGE REFLECTS A 12 dB SYSTEM MARGIN OVER A NOMINAL 3 μV SQUELCH SETTING
3. GROUND TO AIR EXAMPLE
4. ANTENNA GAIN IS UNITY

c. Other values of system parameters can be incorporated into the graphical method presented herein, as will be discussed in paragraph 4 of this appendix.

3. METHOD TO DETERMINE GROUND ANTENNA ADEQUACY.

a. Communications Service Volume. The method of determining whether the communications service volume is adequately served by the ground antenna consists of finding the range between the ground antenna and the 12 up contour at the worst point in the pattern (the null of the pattern), finding the elevation angle of the null above the horizon, and evaluating whether the 12 up contour at the null penetrates the communications service volume. For this method, several variables must be identified and defined. These include:

(1) Grazing angle, ψ the angle of incidence and reflection at the earth's surface, as shown in figure 22.

(2) Ground antenna height, h_1, as shown in figure 22.

(3) Aircraft antenna height, h_2, as shown in figure 22.

(4) Distance (range), R, distance between transmit and receive antennas.

b. Antenna Height Evaluation. The process of evaluating the antenna height (h_1) to determine that the communications service volume is adequately served involves a seven-step process.

(1) Step 1 - Service Volume. A service volume requirements curve must be prepared using Figure 25, Graphical Aid for Determining Service Volumes, so the service volume can be depicted graphically, similar to that shown in Figure 26, Comparison Graph for Matching Lobe/Null Structure to Service Volume Requirements, and upon which nulls can be positioned to see if the service volume has been penetrated. Although it is unnecessary to plot a detailed vertical loping pattern as shown in figure 26, the pattern does illustrate a consistorial graph of how it would appear.

(2) Step 2 - Low Angle Coverage. Low-angle coverage must be evaluated using Figure 27, Low-Angle Antenna Coverage Limits, to determine what antenna height satisfactorily covers the lower positions of the service volume down to the 0.4 degree limit.

(3) Step 3 - First Full. The position of the first (or higher) null must be determined for the particular terrain characteristics considered. Figure 28, Positions of Nulls vs Grazing Angle for Various Antenna Heights (Dry Dessert), is used if the reflection occurs on dry desert; Figure 29, Position of Nulls vs Grazing Angle for Various Antenna Heights (Average

Ground) for average ground; Figure 30, Position of Nulls vs Grazing Angle for Various Antenna Heights (Good Ground); Figure 31, Position of Nulls vs Grazing Angle for Various Antenna Heights (Marshland); Figure 32, Position of Nulls vs Grazing Angle for Various Antenna Heights (Freshwater); and Figure 33, Position of Nulls vs Grazing Angle for Various Antenna Heights (Sea Water).

FIGURE 25. GRAPHICAL AID FOR DETERMINING SERVICE VOLUMES

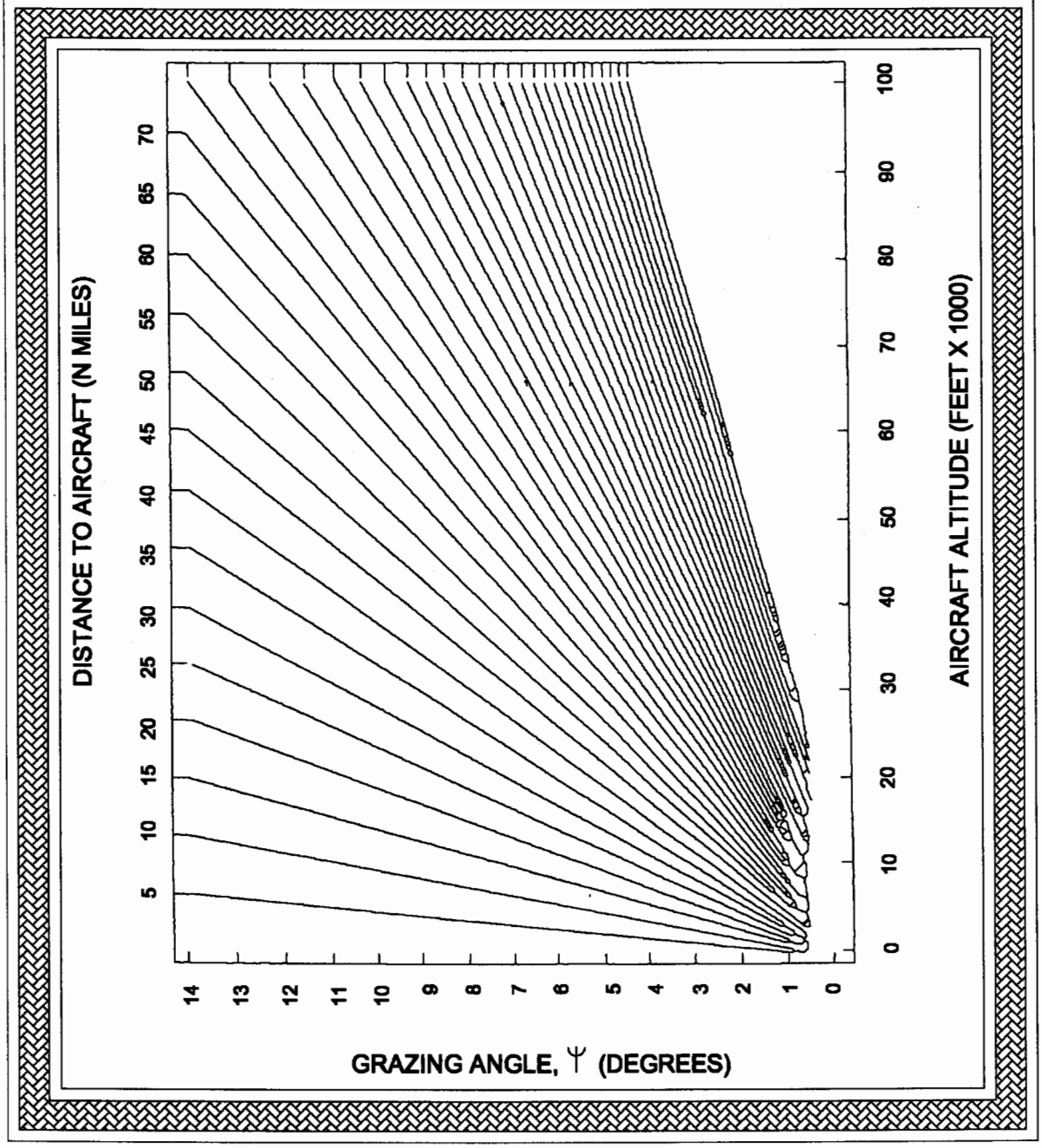

FIGURE 26. COMPARISON GRAPH FOR MATCHING LOBE/NULL STRUCTURE TO SERVICE VOLUME REQUIREMENTS

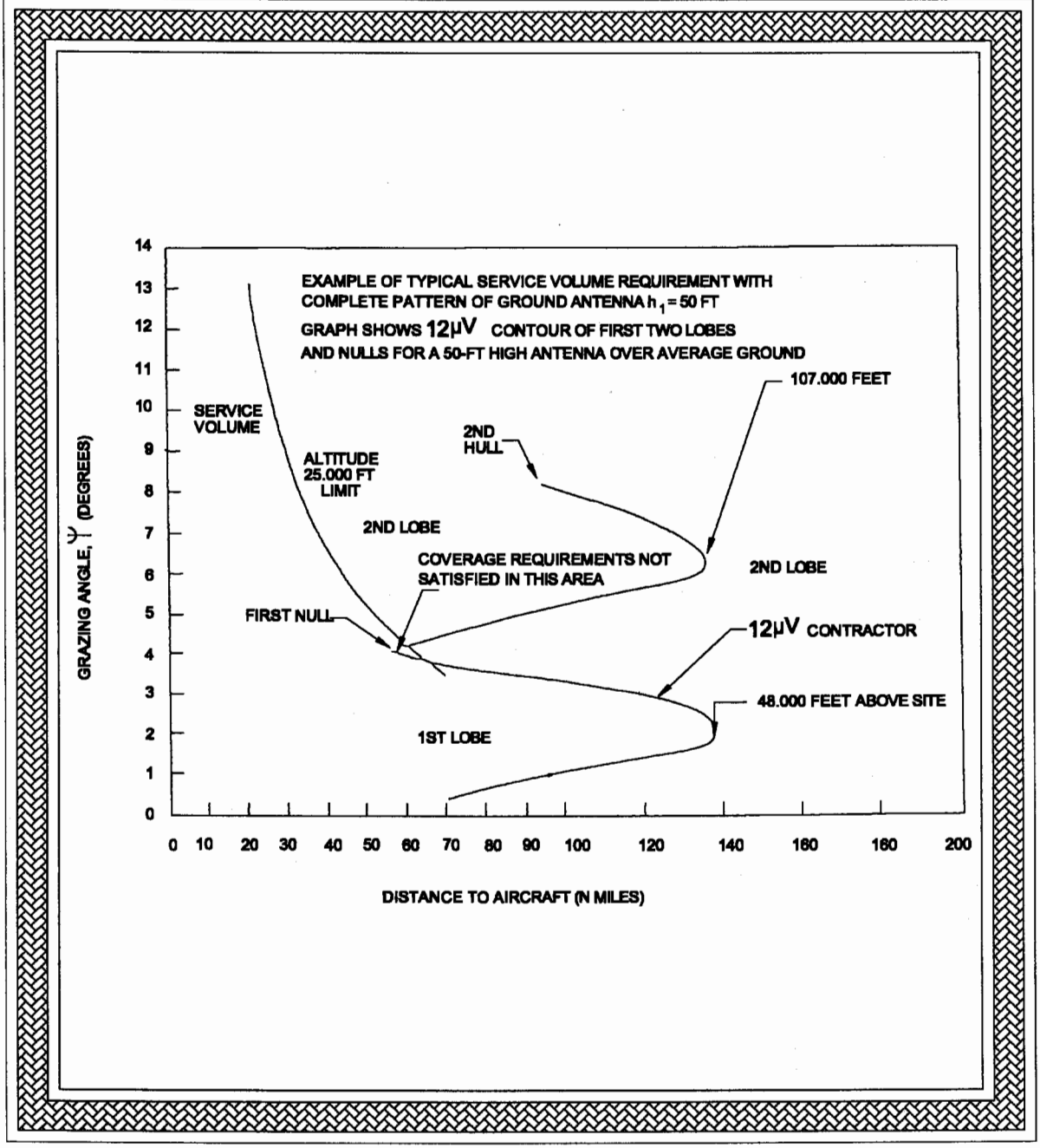

FIGURE 27. LOW-ANGLE ANTENNA COVERAGE LIMITS

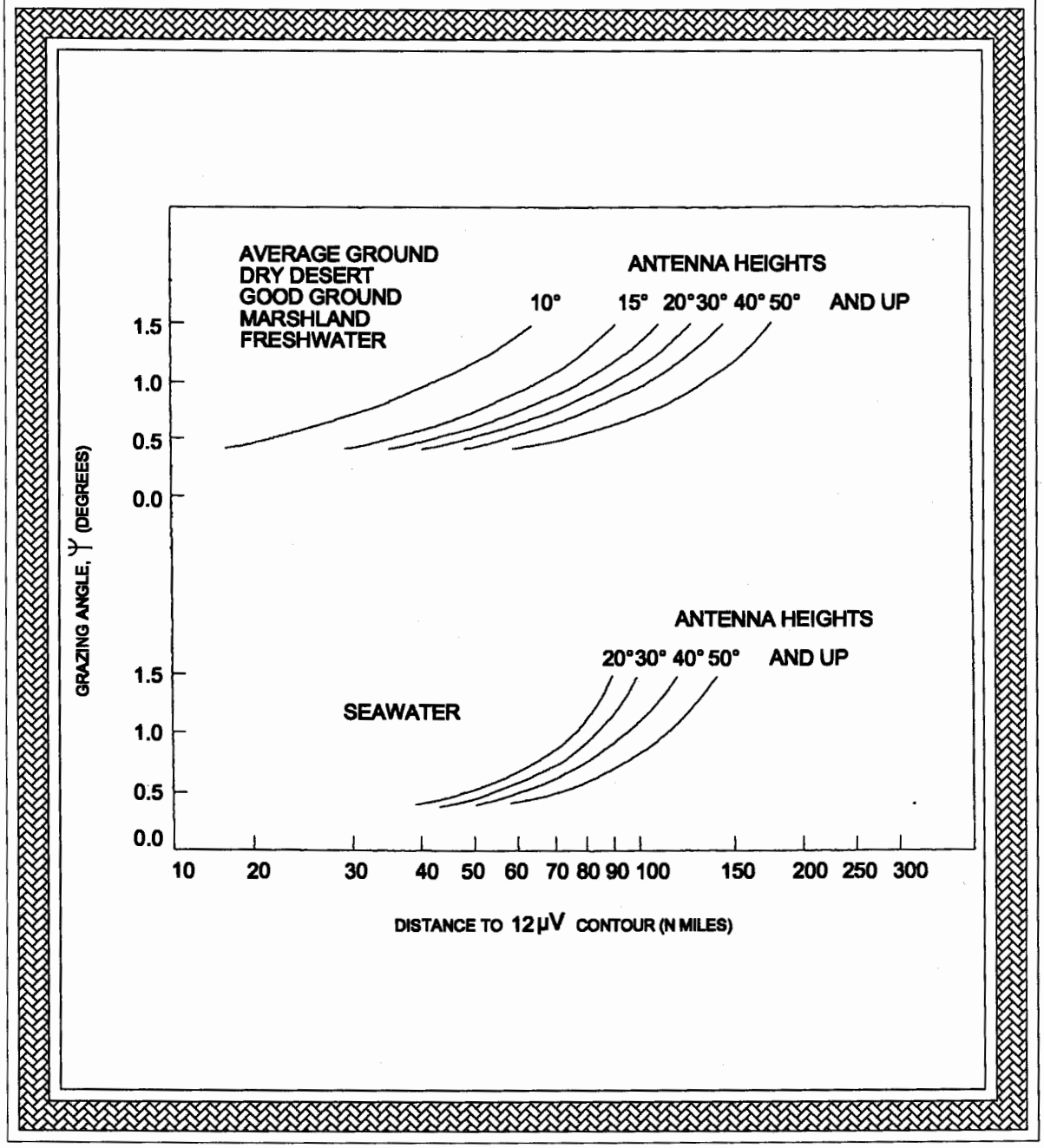

FIGURE 28. POSITION OF NULLS VERSUS GRAZING ANGLE FOR VARIOUS ANTENNA HEIGHTS (DRY DESERT)

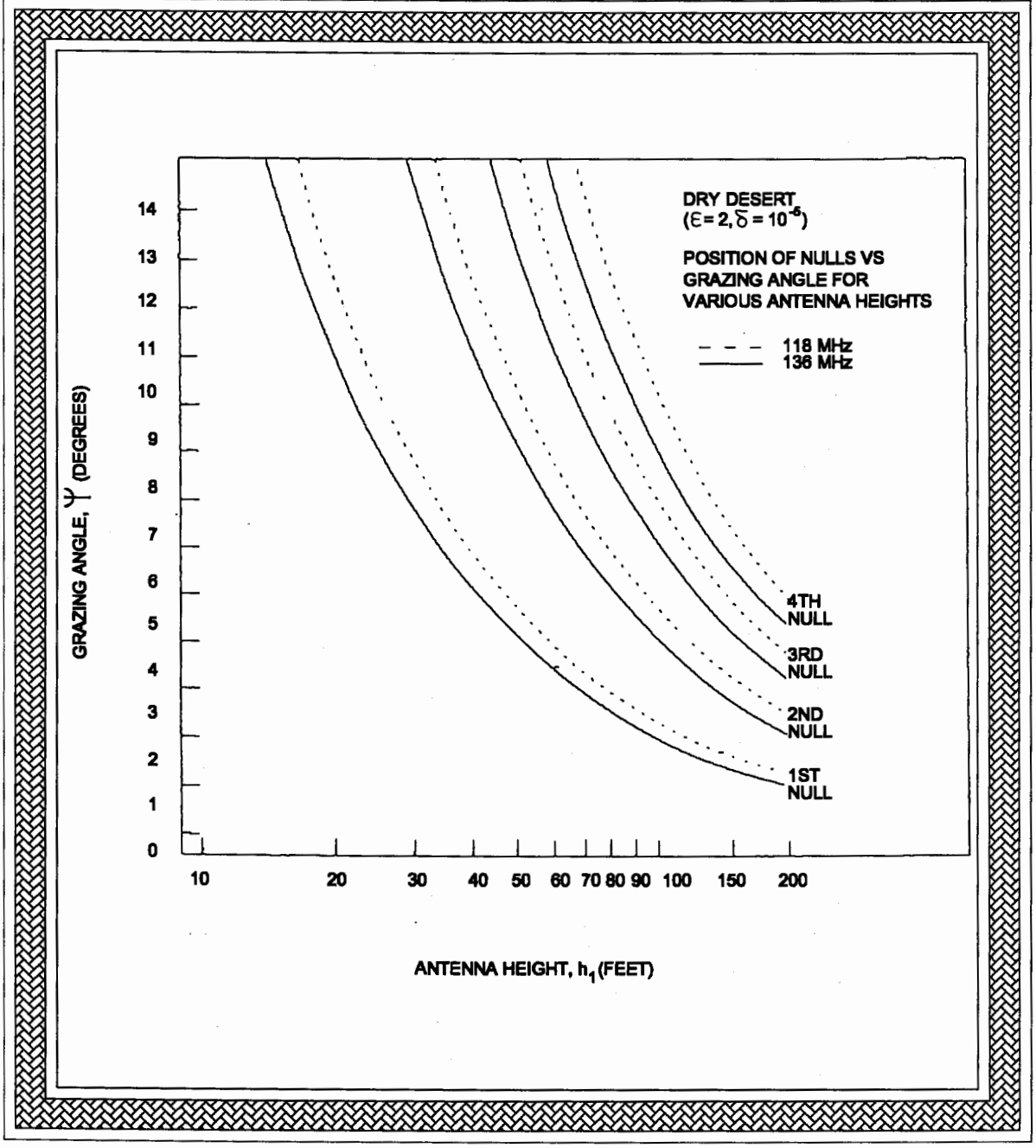

FIGURE 29. POSITION OF NULLS VERSUS GRAZING ANGLE FOR VARIOUS ANTENNA HEIGHTS (AVERAGE GROUND)

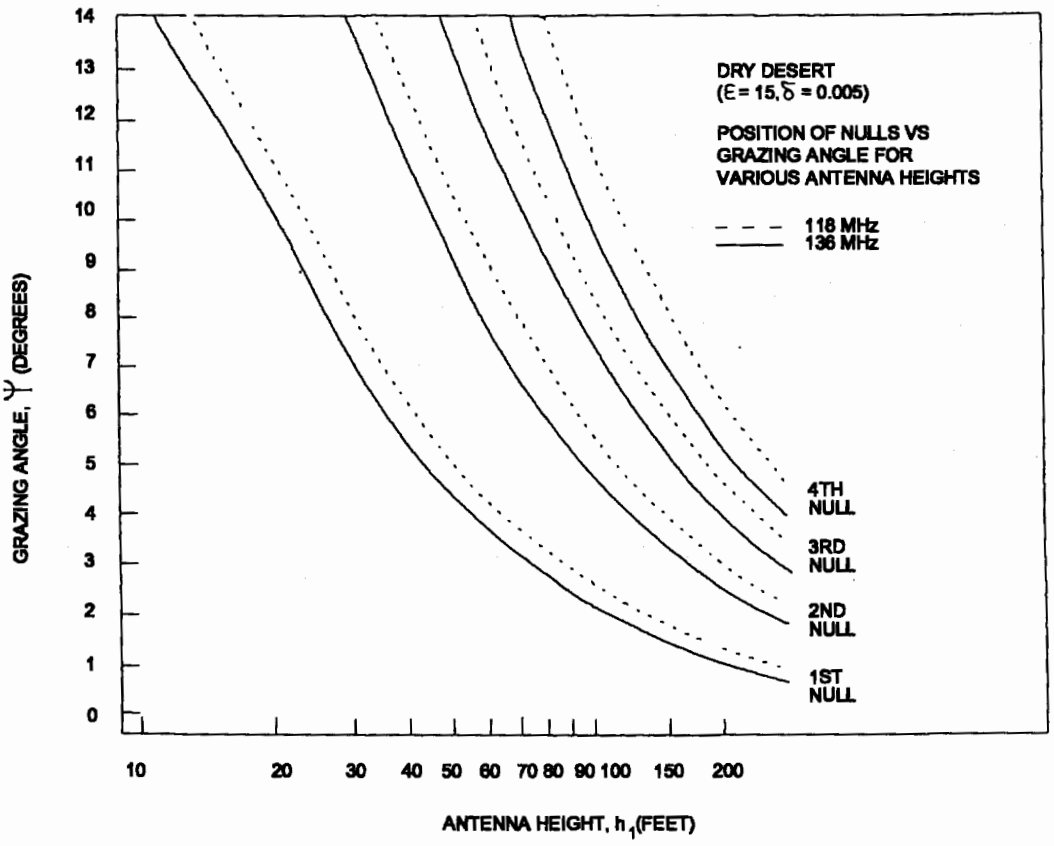

FIGURE 30. POSITION OF NULLS VERSUS GRAZING ANGLE FOR VARIOUS ANTENNA HEIGHTS (GOOD GROUND)

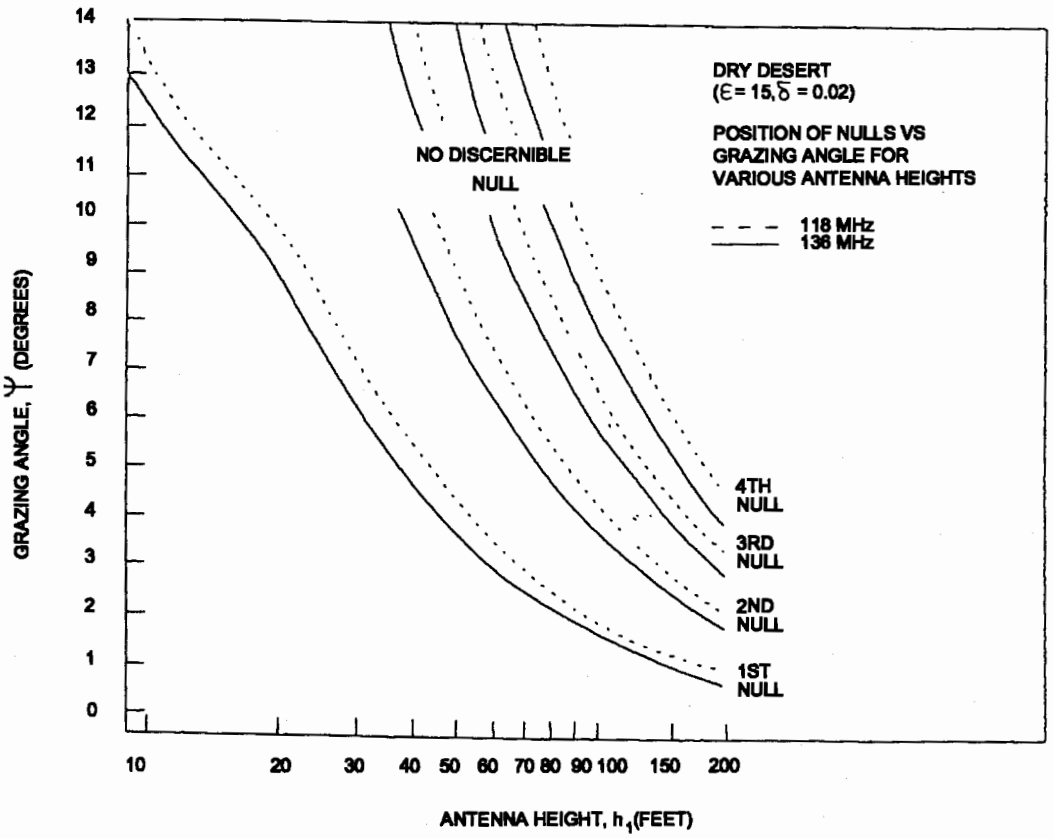

FIGURE 31. POSITION OF NULLS VERSUS GRAZING ANGLE FOR VARIOUS ANTENNA HEIGHTS (MARSHLAND)

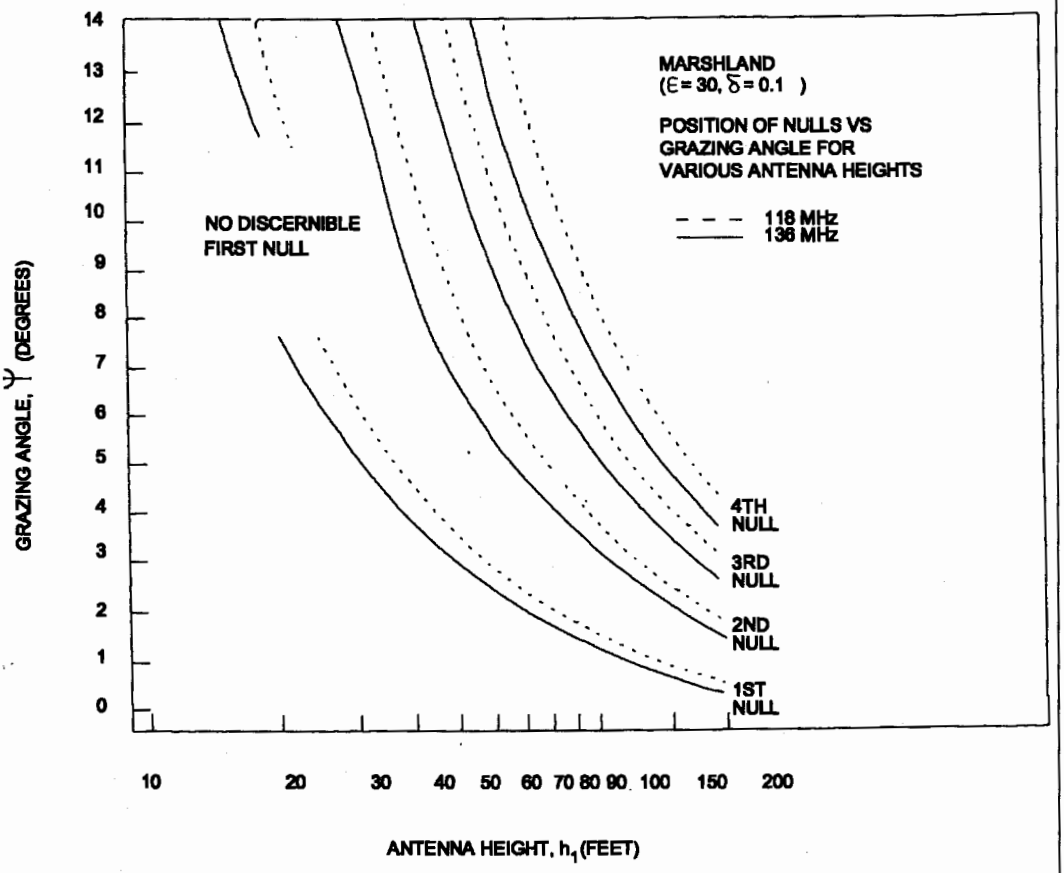

(4) **Step 4 - Null contour.** The distance to the null of the 12 up contour must be determined using Figure 34, Distance to Nulls of 12 up Contour for Various Grazing Angles (Dry Desert), if the reflection occurs on dry desert; Figure 35, Distance to Nulls of 12 uv Contour for Various Grazing Angles (Average Grounds, if on average ground; Figure 36, Distance to Nulls of 12 up Contour for Various Grazing Angles (Good Ground), if on good ground; Figure 37, Distance to Nulls of 12 uV Contour for Various Grazing Angles (Marshland), if on marshland; Figure 38, Distance to Nulls of 12 uV Contour for Various Grazing Angles (Freshwater) if on freshwater; and Figure 39, Distance to Nulls of 12 uV Contour for Various Grazing Angles (Seawater) if on seawater.

(5) **Step 5 - Results.** The results of steps 3 and 4 are plotted on the service volume curve prepared in step 1.

(6) **Step 6 - Renormalization.** If the ground antenna is to be used as a receive antenna rather than a transmit antenna, or if the values to be studied are different from those that have been assumed, a renormalization process must be used to adjust the new values to actual values. This renormalization process is presented in paragraph 4.

(7) **Step 7 - Gapless Coverage.** If the antenna height selected produces nulls which do not fall within the service volume and no other acceptable height is more available, then the requirement for galleys coverage is satisfied and the design procedures in this appendix are complete. If the antenna height does not meet the requirements, a new height should be attempted by returning to step 2 and repeating the process, or, if all heights are exhausted, the requirements for the communications service volume should be reevaluated.

c. **Renormalizing Techniques.** Paragraph 4, presents the techniques to renormalize the calculations to more appropriate values or to change conditions from a ground transmit antenna to a receive antenna. Paragraph 5 presents several examples involving the method described.

FIGURE 32. POSITION OF NULLS VERSUS GRAZING ANGLE FOR VARIOUS ANTENNA HEIGHTS (FRESHWATER)

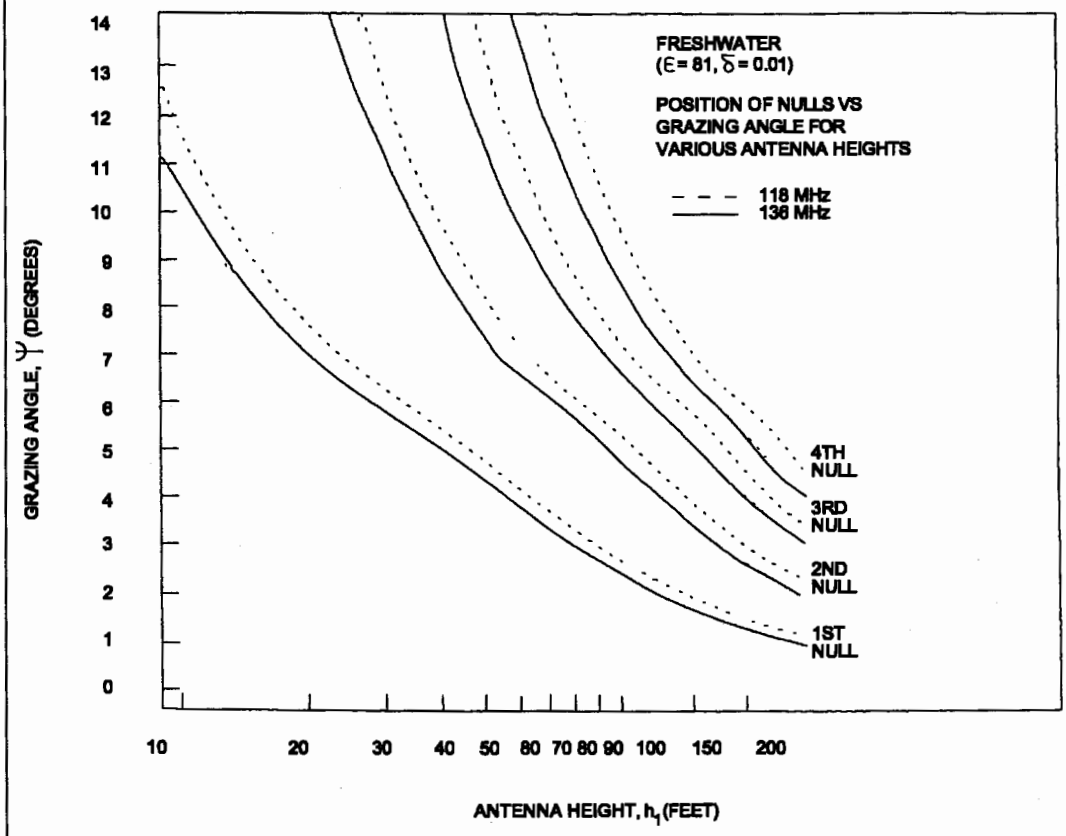

FIGURE 33. POSITION OF NULLS VERSUS GRAZING ANGLE FOR VARIOUS ANTENNA HEIGHTS (SEA WATER)

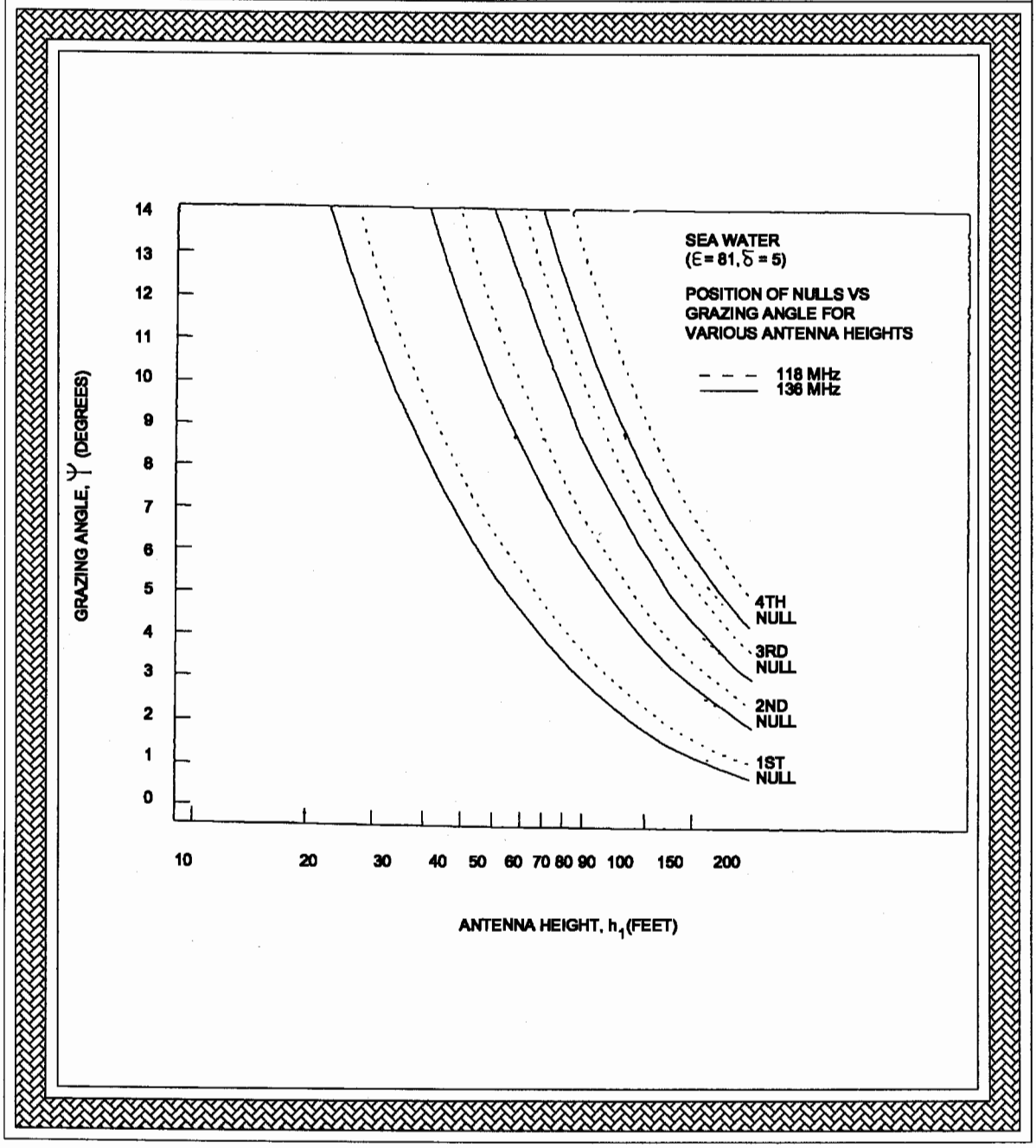

FIGURE 34. DISTANCE TO NULLS OF 12 μV CONTOUR FOR VARIOUS GRAZING ANGLES (DRY DESERT)

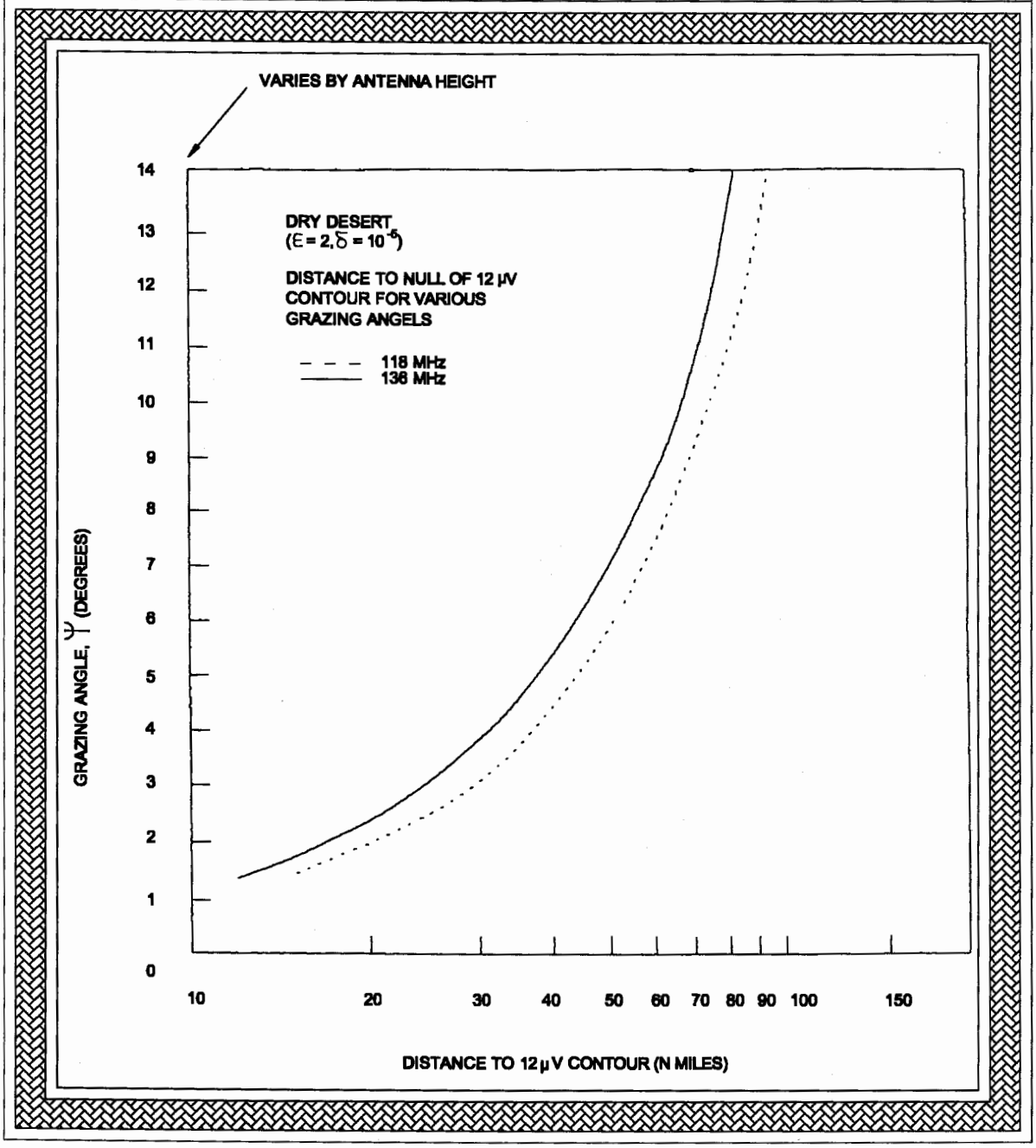

FIGURE 35. DISTANCE TO NULLS OF 12 μV CONTOUR FOR VARIOUS GRAZING ANGLES (AVERAGE GROUND)

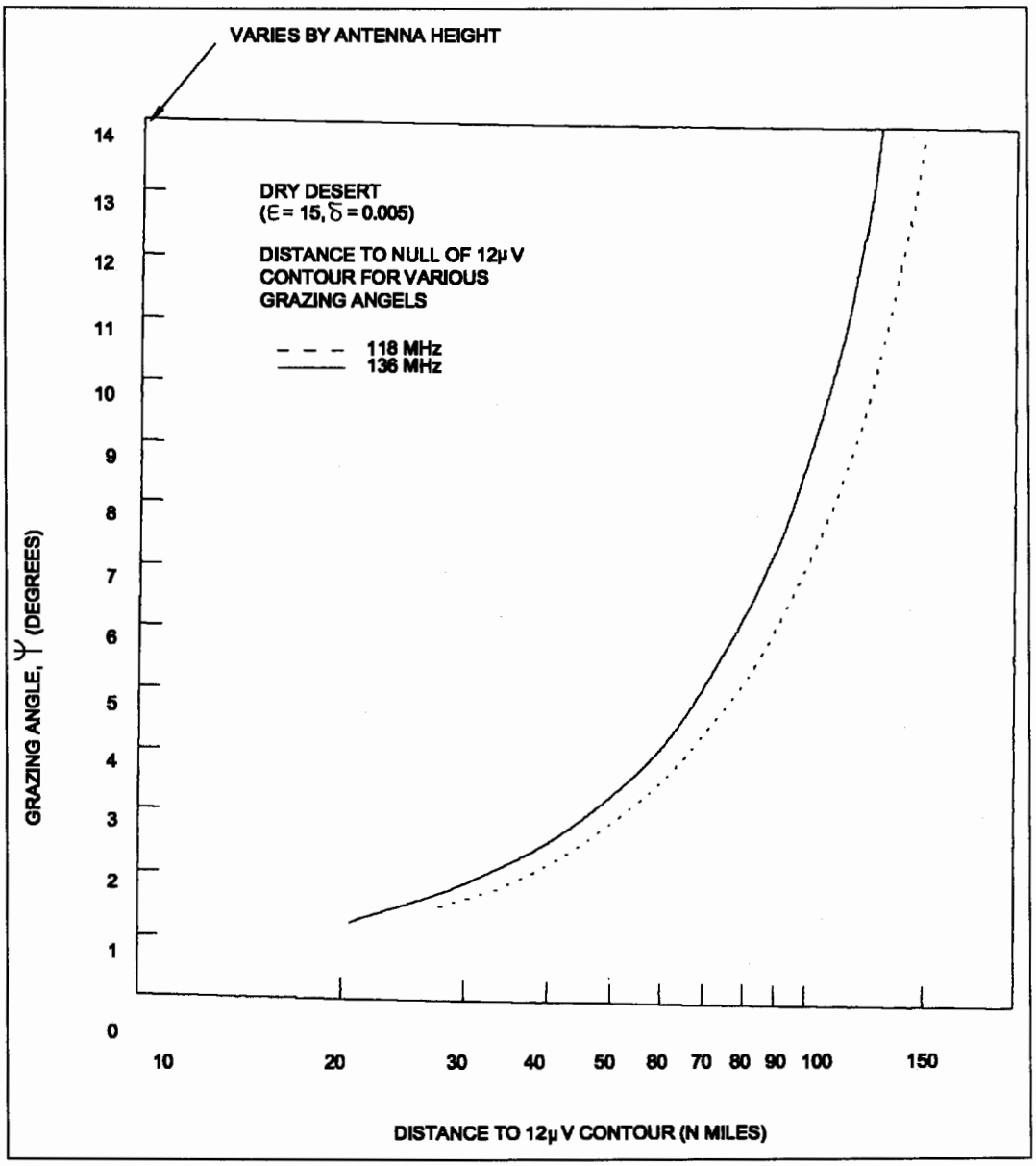

FIGURE 36. DISTANCE TO NULLS OF 12 μV CONTOUR FOR VARIOUS GRAZING ANGLES (GOOD GROUND)

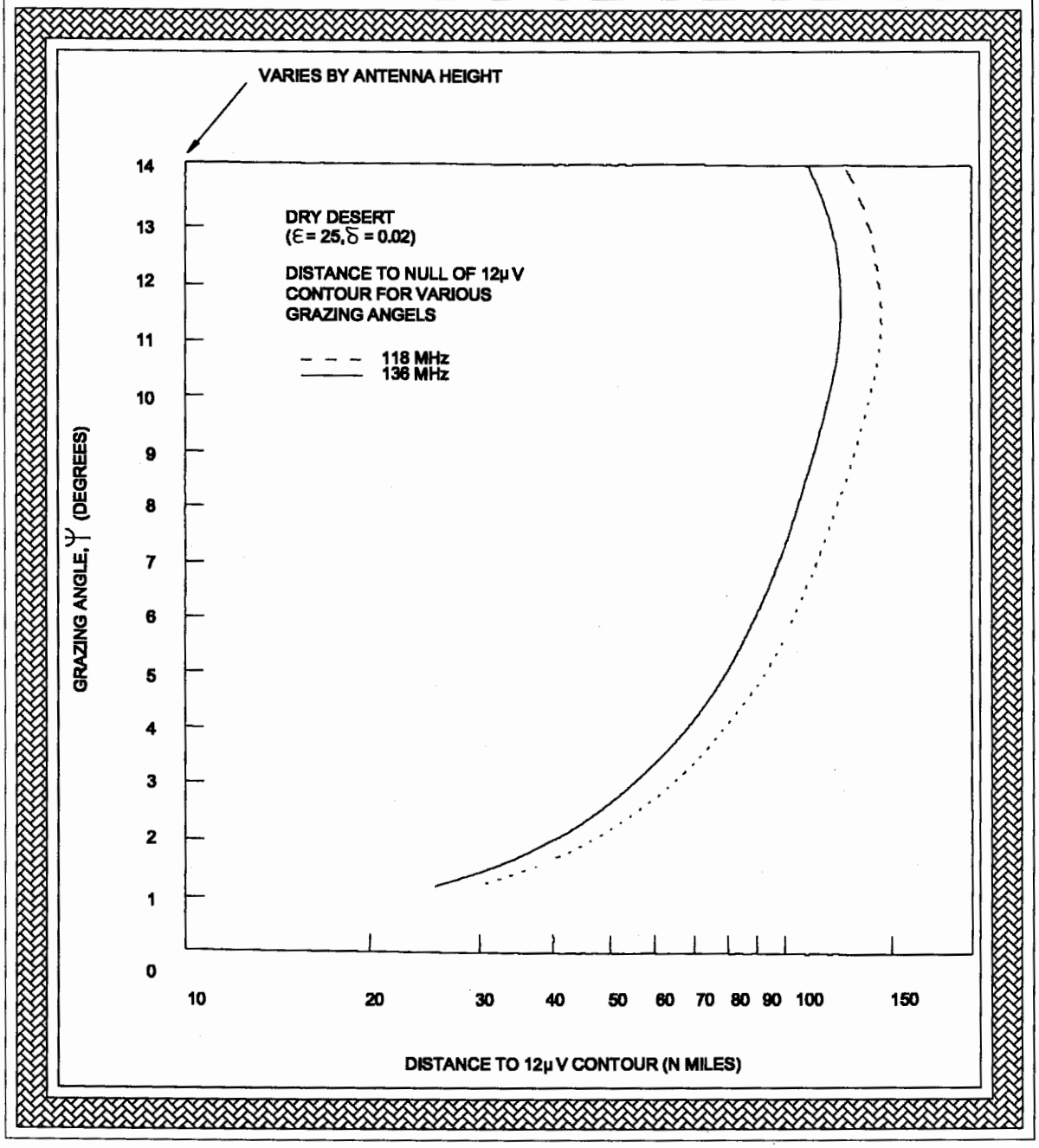

FIGURE 37. DISTANCE TO NULLS OF 12 µV CONTOUR FOR VARIOUS GRAZING ANGLES (MARSHLAND)

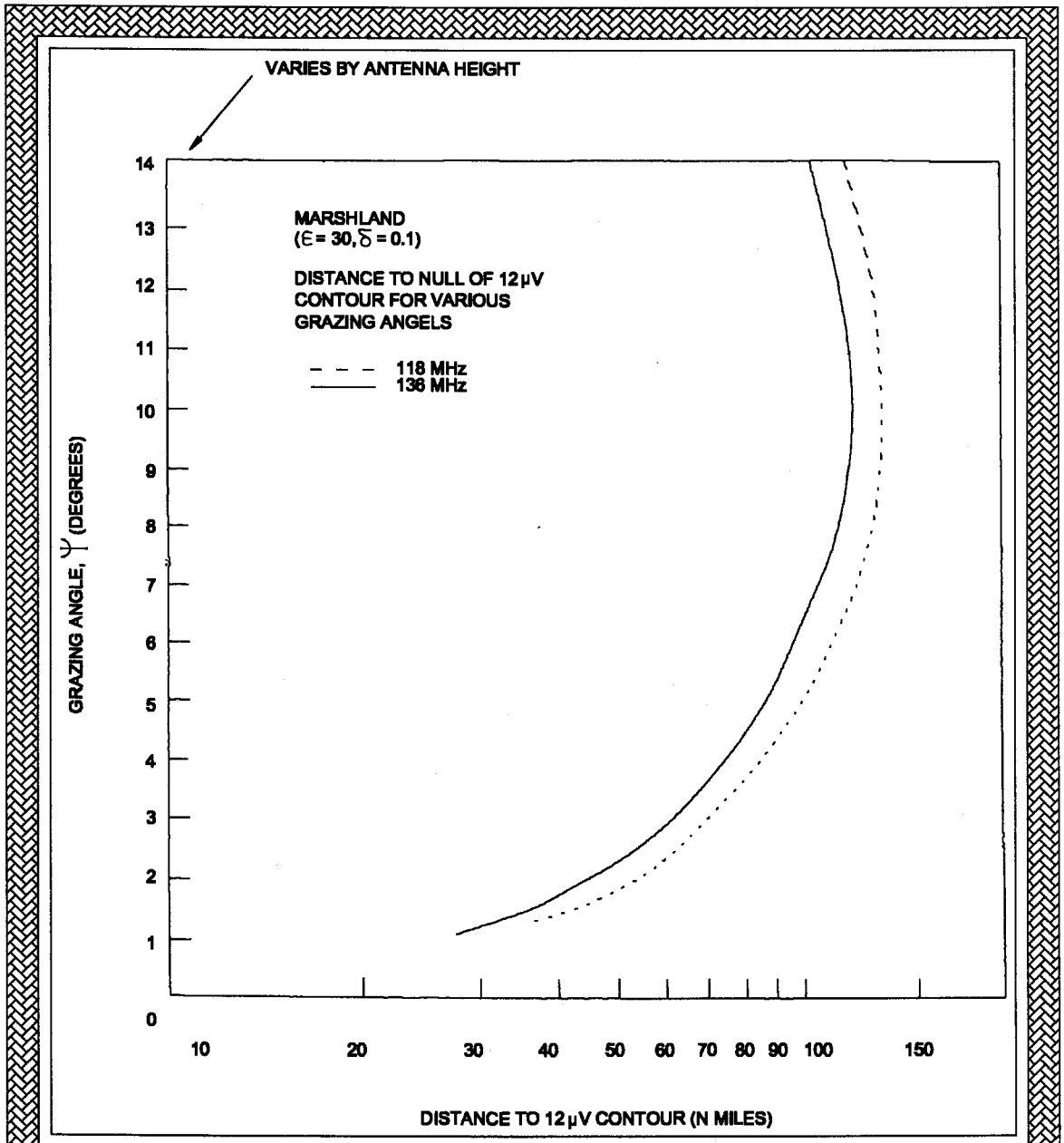

FIGURE 38. DISTANCE TO NULLS OF 12 μV CONTOUR FOR VARIOUS GRAZING ANGLES (FRESH WATER)

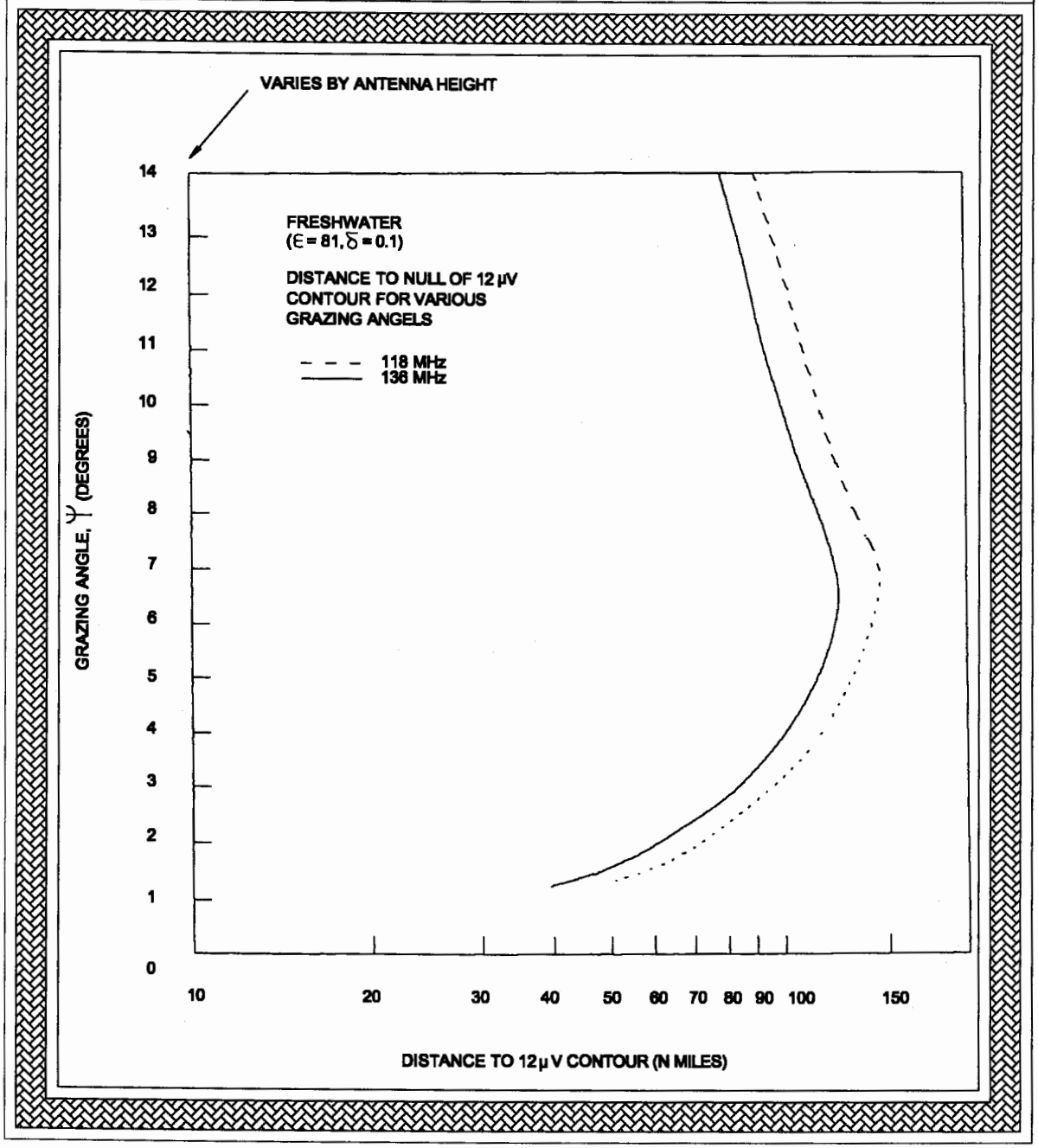

FIGURE 39. DISTANCE TO NULLS OF 12 μV CONTOUR FOR VARIOUS GRAZING ANGLES (SEA WATER)

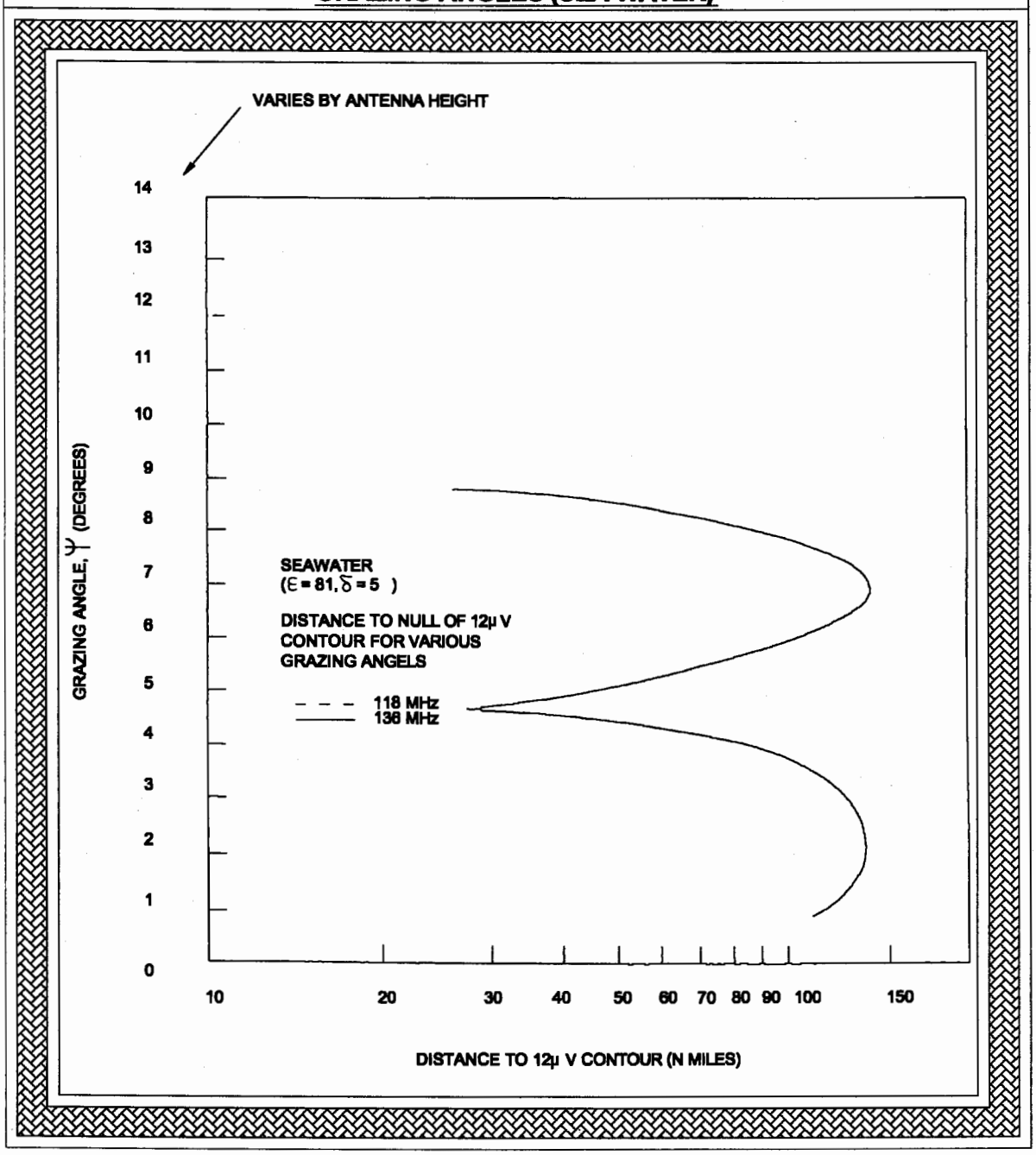

4. RENORMALIZATION TO OTHER VALUES.

a. Receiver Antenna Values. The method presented in paragraph 3 has been described as if the ground antenna is a transmit antenna. If, instead, it is a receive antenna, the same method is applicable. However, to fully understand the process, one must visualize the graphs presented in a slightly different manner. Since the equations (which are used to prepare the graphs in this appendix) are not sensitive to the direction of propagation (ice., air-to-ground or ground-to-air), figure 23, can be considered to be a contour of all points where an airborne transmitter (with a power output of 6 watts output from the coaxial transmission line feeding the antenna) would produce a 12 uV signal at the 50 ohm input to a ground receiver. Recall that the description for the ground transmitter case was that figure 23, presented the contour of all points where a ground-based transmitter (with a power output of 6 wafts output from the coaxial transmission line feeding the antenna) would produce a 12 microvolt signal at the 50 ohm input to an airborne receiver.

b. Receiver Antenna coverage and Nulls. In steps 2 and 4 of paragraph 1b of this appendix, low-angle coverage distances (R2) and distances to nulls (R4) are determined so that they may be plotted on the service volume graph described in step 1. These distances, of or of may eke increased or decreased as the result of using different radiated mowers from the transmit antenna (aircraft or ground). The ratio of the actual distance, R_{ACTUAL}, to the distance determined in step 2 or step 4 is given by:

$$\frac{R_{ACTUAL}}{R_{2,4}} = \sqrt{\frac{P_T}{6 \text{ watts}}}$$

where P_T is the transmit power (in wafts) at the output from the coaxial transmission line feeding the transmit antenna. Thus, if PT is to be 40 watts; then

$$\frac{R_{ACTUAL}}{R_{2,4}} = \sqrt{\frac{40}{6}} = 2.58$$

c. Receiver Antenna Actual Range. Therefore, the actual range is increased to 2.58 times the value determined in step 2 or 4. This new value can be plotted in the graph prepared in step 1 to see if it meets the requirements by being to the right (or above) the required service volume.

d. Receiver Antenna Actual Values. Note that if the actual values of P_T are identical to those assumed in the construction of the graphs (i.e., P_T =

6 watts), then this renormalization process is unnecessary since R_{ACTUAL} will equal R_2 or R_4.

5. SAMPLE CALCULATIONS.

a. Example 1.

(1) Facility Nominal Assumptions. An approach control facility is to be capable of receiving an aircraft signal up to an altitude of 25,000 feet and out to a distance of 70 statute miles at a frequency of 118 MHz. It has been determined that the soil in all azimuthal directions from the ground antenna is average, squelch settings on the receiver are set at 3 uv, a typical system signal margin of 12 dB is to be employed, and all aircraft with an RF output of 6 watts (rated transmitter power of 10 watts) from the coaxial transmission line feeding the transmit antenna.

(a) Step 1 - Plot Values. Using figure 25, plot the following values on rectangular graph paper for an aircraft altitude of 25,000 feet. Additional values are not required since the maximum service volume range is 70 males. The resulting service volume is presented in Figure 40, Comparison Graph for Example No. 1.

Resulting Service Volume:

ψ (Degrees)	Distance to Aircraft (miles)
13.2	20
10.6	25
8.8	30
7.5	35
6.5	40
5.8	45
5.2	50
4.6	55
4.2	60
3.8	65
3.5	70

(b) Step 2 - Locate First Null. Using figure 35 (average ground), locate the position of the first null of the contour for an antenna height of 50 feet. Find ψ = 4.8 degrees for a frequency of 118 MHz.

> **NOTE:** The minimum aircraft altitude above the site at 70 nautical miles, for 12 uV to the receiver from a ground antenna having a 50 foot elevation is 7,800 feet (0.72 degrees).

(c) Step 3 - Locate Null Position. Using figure 35 (average ground) locate a null position of 4.8 degrees and a frequency equal to 73 nautical miles.

(d) **Step 4 - Plot ψ.** Plot ψ = 4.8 degrees and R = 73 miles on figure 40.

(e) **Step 5 - Nominal Values.** Since the values assumed in this example are the same as those nominal values presented in paragraph, no renormalization is necessary.

(2) **Example 1 Evaluation.** In this example if a frequency of 136 MHz were selected instead of 118 MHz, the requirement would not have been met. Figure 40 shows that at a frequency of 136 kHz, the grazing angle, ψ= 4.2 degrease and the distance to the first null is 58 miles. Under these conditions the service volume would be penetrated. In addition, if other antenna heights were attempted, they too would not have met the requirements at the 136 MHz. In this case, transmitter power, squelch settings, margins, or frequencies must be reevaluated.

b. **Example 2.**

(1) **Nominal Assumptions.** A high altitude en route communications antenna is to be located in the desert and operated on a frequency near 136 MHz. Coverage requirements are for a maximum altitude of 45,000 feet and a maximum distance of 175 miles. A ground transmitter rated at 50 watts (radiated power of 40 watts) is assumed, 3 uV squelch levels will be used on the receiver, and a system margin of 12 dB is assumed.

> **NOTE:** 0.4 degrees at 175 nautical miles equals 24,000 feet above the site (if site is at 1,000 feet, then 25,000 feet AMSL).

(a) **Step 1 - Plot Service Volume.** Using figure 25, plot the service volume as shown in Figure 41, Comparison Graph for Example No. 2.

(b) **Step 2 - Coverage limits.** From figure 27, the 0.4 degree lower limit is found to be satisfied out to a distance of 175 miles and 24,000 feet above the site using an antenna height of 150 feet with transmitter power of 50 watts. Thus, to meet the 110 mile limit with coverage down to 0.4 degree, it is sufficient to satisfy the lower coverage limit with 6 watts at an antenna height of 150 feet.

FIGURE 40. COMPARISON GRAPH FOR EXAMPLE No. 1

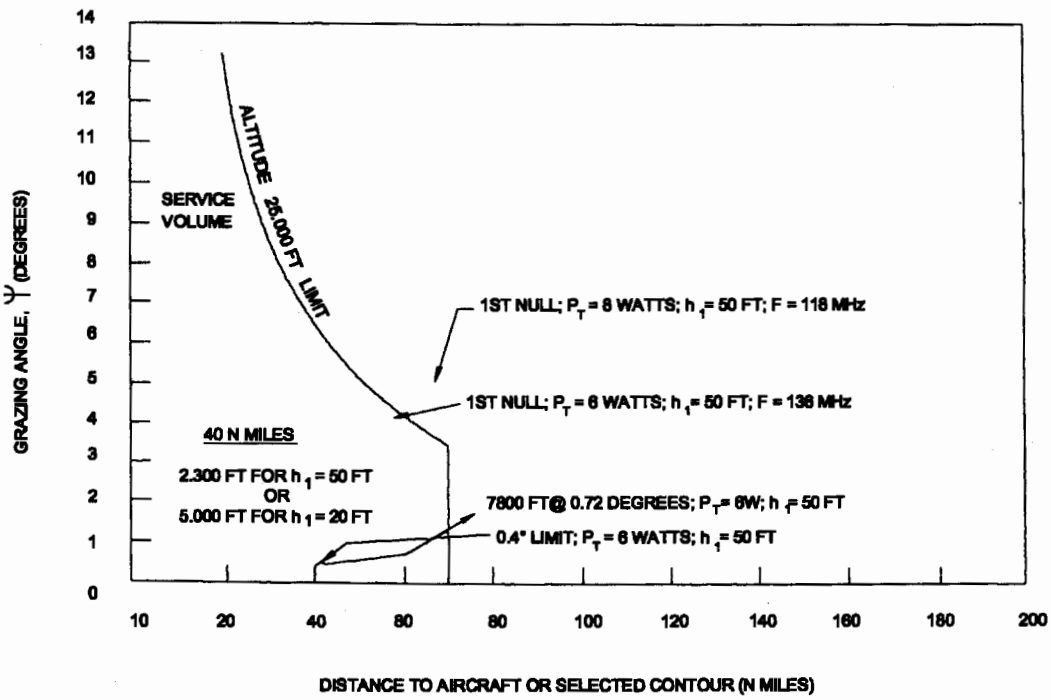

FIGURE 41. COMPARISON GRAPH FOR EXAMPLE No. 2

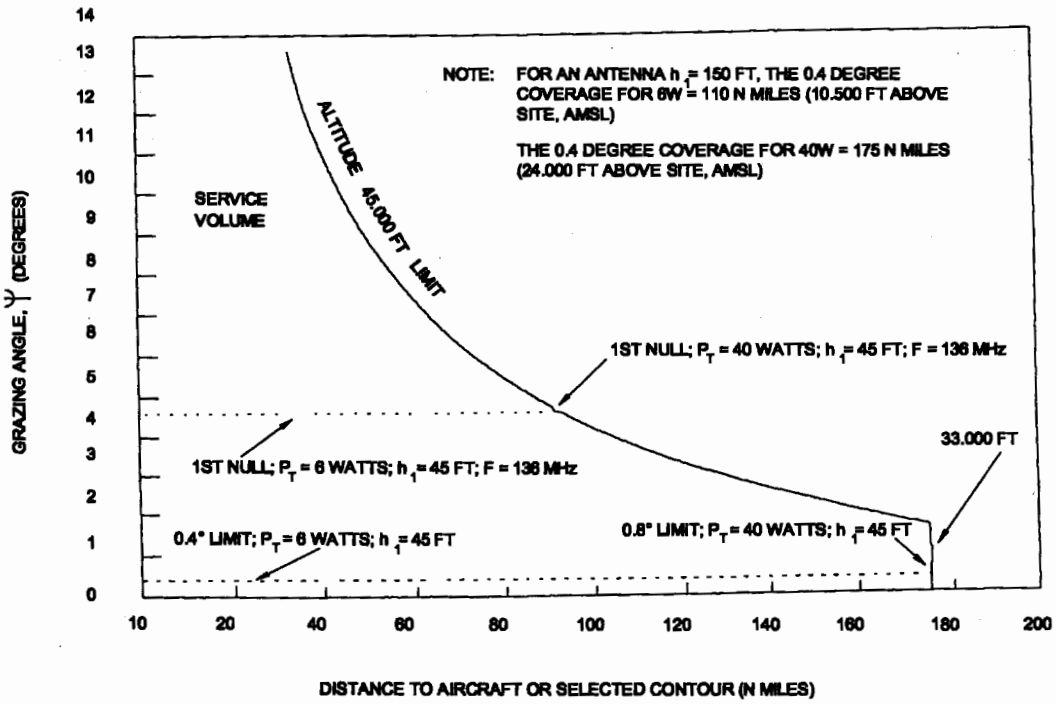

(c) **Step 3 - Coverage Data.** See figure 41, for sample coverage data using an antenna height of 45 feet.

6. **REFLECTION ZONE FOR VERTICAL LOBING.** Figure 42, Reflection Zone for Vertical Lobing, is important in finding an optimum location for antennas. This figure shows the distance (in feet) to the reflection zone, and relates this distance to antenna height and grazing angle. Figure 42 should be used in conjunction with a reasonably accurate site map. The site map should show surface reflection conditions for a radius of about two miles from the proposed antenna site. It should show the elevation of large buildings, hills, forested breast and water areas. A shift from land to water reflection has considerable effect on the lobe/null structure, especially seawater.

7. **RESERVED.**

8. **RESERVED.**

9. **RESERVED.**

10. **RESERVED.**

FIGURE 42. REFLECTION ZONE FOR VERTICAL LOBING

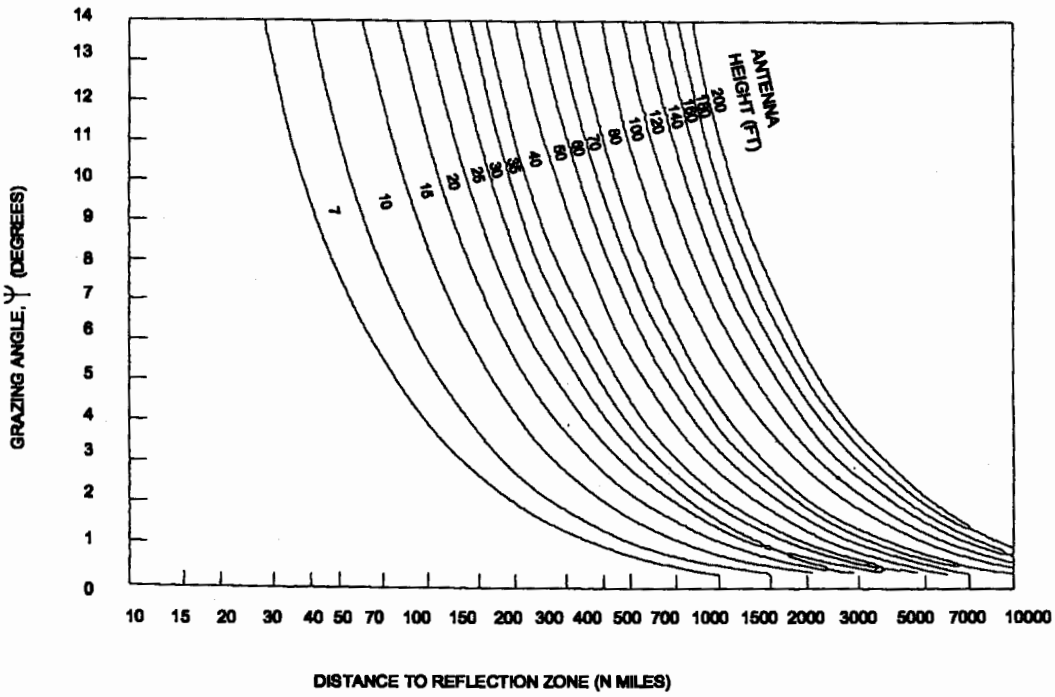

APPENDIX 7. PATTERN DISTORTION

1. **PURPOSE.** This appendix material is intended to augment the descriptions of pattern distortion discussed in chapter 6, section Six.

2. **GENERAL.** Pattern distortion is an undesired effect that can be due to anyone of a number or causes. Distortion should be insignificant for a standard RCF antenna tower with all antennas and lightning air terminals separated by 8 feet or more. Of particular interest are distortions due to antennas that are in close proximity to a desired antenna and, as a result, couple to it. A typical cause of this distortion is shown in Figure 43, General Configuration for Omnidirectional Pattern Distortion. If the desired antenna is a transmit antenna, other antennas (or scatterers) close by receive the radiated energy and reradiate some or all of it. This reradiation adds with some phase relationship to the original radiation to distort the pattern from its original circular azimuth pattern to one which varies about the desired pattern (depending upon the aircraft's position). If the desired antenna is a receive antenna, both the antenna and the scatterer have approximately the same incident power density due to the direct path from the aircraft. However, the scattering antenna receives and reradiates this power and the reradiation is coupled to the desired antenna with the same result as in the transmit case. Since the communications link is degraded by the same amount whether the antennas under consideration are transmit or receive, the calculations to determine the magnitude of the pattern distortion will be described for the transmit case. The results would be the same for the receive case.

3. **VOLTAGE PATTERNS.**

a. **Antenna in Close Proximity.** A pair of antennas in close proximity (one acting as a transmit or receive antenna; the other acting as a scatterer or parasite of the other) produces a voltage pattern given by:

$$F(\theta) = [1 + A^2 + 2A \cos (kd \cos \theta + \emptyset)]^{1/2}$$

where:

$F(\theta)$=the relative voltage produced at some point a great distance from the antennas

θ(theta) = the azimuth angle where the voltage is produced relative to an imaginary line drawn between two antennas

A = the amplitude produced in the direction due to the scattering antenna relative to the amplitude produced in the same direction due to the direct path from the desired antenna

k = the propagation constant, $(2\pi)/\lambda$

d = the separation (in feet) between desired antenna and scattering antenna

Ø(phi) = the phase of the reradiation relative to that of the desired antenna and scattering antenna

λ(lambda) = the free-space wavelength (in feet)

The parameter A is given by $A = \lambda G/(4 \pi d)$

Where:

G = the gain of the scattering antenna under consideration (see Table 16, Gain of Antennas and Objects causing Pattern Distortion)

The parameter θ is assumed to be the phase delay due to the propagation time between the desired antenna and the scattering antenna, that is

$Ø = (2 \pi d)/\lambda$

FIGURE 43. GENERAL CONFIGURATION FOR OMNIDIRECTIONAL PATTERN DISTORTION

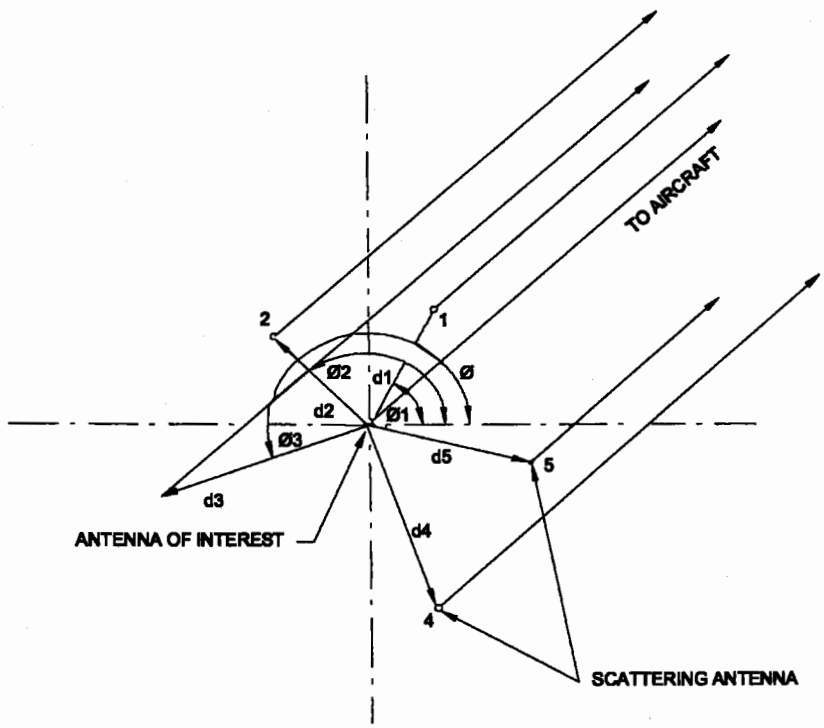

b. Pattern Evaluation. When a number of scatterers are in the vicinity of a desired antenna, the equation for the voltage pattern can be evaluated for each pair of antennas (comprising the desired antenna and a scatterer). The results at each azimuth angle are then multiplied together for the total pattern. Appropriate adjustments must be made for the respective orientations of the scatterers, as illustrated in figure 43. For example, if there are three scatterers, the total pattern is given by:

$$F(\theta) = F_1\ (\theta - \theta_1)\ F_2\ (\theta - \theta_2)\ F3\ (\theta - \theta_3)$$

Where:

$F_1\ (\theta - \theta_1)$ is the pattern due to desired antenna and the first scatterer, using equation 1.

$F_1\ (\theta - \theta_1)$ is the pattern due to desired antenna and the second scatterer, using equation 1.

$F_1\ (\theta - \theta_1)$ is the pattern due to desired antenna and the third scatterer, using equation 1.

θ_1, θ_2, θ_3, are the angles of the various scatterers relative to the desired antenna and with respect to a reference direction (see figure 43)

TABLE 16. GAIN OF ANTENNAS AND OBJECTS CAUSING PATTERN DISTORTION

125 MHz (Nominal)

Type of Reradiating Antenna Or Object	G_k
Dipole	1.64
VHF/UHF Collinear	2.9[n]
7' - 8' Air Terminal	2.0[n]

300 MHz (Nominal)

Type of Reradiating Antenna Or Object	G_k
Dipole	2.10
VHF/UHF Collinear	3.90[n]
7' - 8' Air Terminal	2.80[n]

[n] Developed Values

c. **Intensity Pattern.** The voltage intensity pattern in decibels (dB) can then be found from the following equation:

$$F(\theta)\ dB = 20 \log_{10} F_1 (\theta - \theta_1) + 20 \log_{10} F_2 (\theta - \theta_2) + 20 \log_{10} F_3 (\theta - \theta_3)$$

d. **Approximate Actual Pattern.** These equations represent an approximation to the actual pattern for the small values of A which can be expected, but the errors are negligible.

(1) **Intensity Values.** Values of voltage intensity less than unity (from equation 5) indicate distortion with the lowest value below unity representing the distortion exhibited by the evaluated antenna as a result of nearby antennas and radiating objects. The angle at which the distortion occurs is the angle at which a radiated or received signal may drop out or be missed. The maximum negative value of voltage intensity expressed in dB represents the total amount of pattern distortion.

(2) **Distribution Of Values**. The number and distribution of values in the radiation pattern are important for determining the effectiveness of a transmitted ground signal being heard by an aircraft and, conversely, a signal transmitted from an aircraft being received on the ground.

(a) **Antenna Placement Geometry.** For minimum pattern distortion, antenna placement geometry should avoid configurations where dips in radiation patterns coincide. Where dips in two patterns from three antennas coincide, pattern distortion doubles. Where dips in three patterns from four antennas coincide, pattern distortion triples.

(b) **Geometric Configurations.** Analyses of various computer runs for standard FAA antennas indicate no geometric configurations where pattern distortion values vary more than 1.5 dB from the values indicated in figure 19 of appendix 5.

(c) **Radiation Pattern Variation.** In general, the number of dips in a radiation pattern varies directly with the number of quarter-wavelengths separating the two antennas at the operating frequency of the antenna under investigation (for example, three quarter-wavelengths, three dips; and eight quarter-wavelengths, eight dips) .

(d) **Number of Variations.** The greater the number of dips in the pattern, the more difficult it is to find geometric configurations that avoid dip coincidence. For this reason, the pattern distortion resulting from four standard VHF antennas arranged in a square is the same whether the spacing is 8 feet on a side or 16 feet on a side. These results are summarized in Table 17, Total Pattern Distortion for Four VHF Antennas Arranged in a Square.

e. **Arranging Three Antennas.** Arranging three antennas in an equilateral triangle configuration doubles the value of pattern distortion exhibited by

a pair of antennas. This appears to be the case regardless of the length of the sides. Generally, this configuration should be avoided. An exception to this applies to the case where three antennas are mounted on a hexagonal tower. The greater separation obtained by mounting the antennas in alternate positions results in a lower value of pattern distortion than obtained from other arrangements.

f. **Hexagonal Tower Platforms.** Analysis of computer runs for standard antennas mounted on hexagonal towers indicates pattern distortion values varying from 0.6 dB for either of two VHF antenna positions filled. If UHF antennas are alternated with the VHF antennas, the values of pattern distortion are 1.5 dB for VHF antennas and less than 1.0 dB for UHF antennas.

g. **Empty Positions on Hexagonal Tower Platforms.** Empty positions on hexagonal tower platforms should be avoided. If five antennas are required, a spare should be added. If fewer than five are required, they should be distributed evenly around the tower. By using figure 19 of appendix 5, values of pattern distortion for any antenna on a hexagonal tower or ATCT cab roof can be estimated to within 1.5 dB of the value obtained from a complete analysis.

TABLE 17. TOTAL PATTERN DISTORTION FOR FOUR VHF ANTENNAS ARRANGED IN A SQUARE

Separation In Feet Between Two Antennas	Pattern Distortion (dB) From Figure-19 of Appendix 5	Total Pattern Distortion For Four Antennas Arranged In Square
8	1.2	1.2
12	0.8	1.6
16	0.6	1.2
32	0.3	0.6

When only two antennas are involved, the distortion value is found directly from the figure. If several antennas are involved, an approximate value for total distortion for the group can be found for any antenna by selecting the largest value found in figures 19 or 21 of appendix 5 for the closest antenna or vertical conducting object.

h. **Groups of Antennas.** Analysis of computer runs for groups of antennas spaced 8 feet apart in a rectangular or square matrix containing 16 or 20 antennas indicates worst case total pattern distortion values. These values are approximately twice that obtained from figure 19 of appendix 5 for two antennas spaced 8 feet apart.

i. **Reduction of Pattern Distortion.** Reduction of pattern distortion is achieved by installing antennas in a rectangular configuration having spacing of 12 feet by 16 feet. Pattern dip cancellations result in a total distortion value approximately equal to that obtained from figure 19 of appendix 5 for two antennas spaced 12 feet apart. Further reduction in achieved by increasing the spacing to 24 feet by 32 feet.

j. **Four Antennas.** An example of a computer analysis of four antennas arranged in a square is shown in Figure 44, Four Standard Antennas Arranged in a Square. The program was developed from equations 1 through 5 as cited in subparagraph 3b of this appendix.

(1) A_o is the antenna being observed for pattern distortion caused by the presence of A_1, A_2, and A_3.

(2) The computer output consists of three columns of figurers as shown in Table 18, Computer Generated Analysis of Horizontal Distortion. The first is the azimuthal reference angle in degrees. The second is the voltage intensity in the far field. The third is the voltage intensity (in dB) relative to an isotropic radiator.

(3) The composite antenna pattern for A_o is obtained by horizontal multiplication of the values in the voltage intensity columns (table 18) for each azimuth angle and converting the product into dB, or by adding the respective values in dB, as shown in the fourth column. The maximum negative values represent pattern distortion or dips below the value exhibited by an omnidirectional antenna.

(4) Pattern distortion for the composite radiation pattern caused by the presence of A_1, A_2, and A_3 occurs at 130 degrees and 320 degrees, and amounts equal to 1.1 dB. The value obtained from figure 19 of appendix 5 using an 8-foot separation is approximately 1.2dB

4. Reserved.

5. Reserved.

6. Reserved.

7. Reserved.

8. Reserved.

9. Reserved.

10. Reserved.

FIGURE 44. FOUR STANDARD ANTENNAS ARRANGED IN A SQUARE

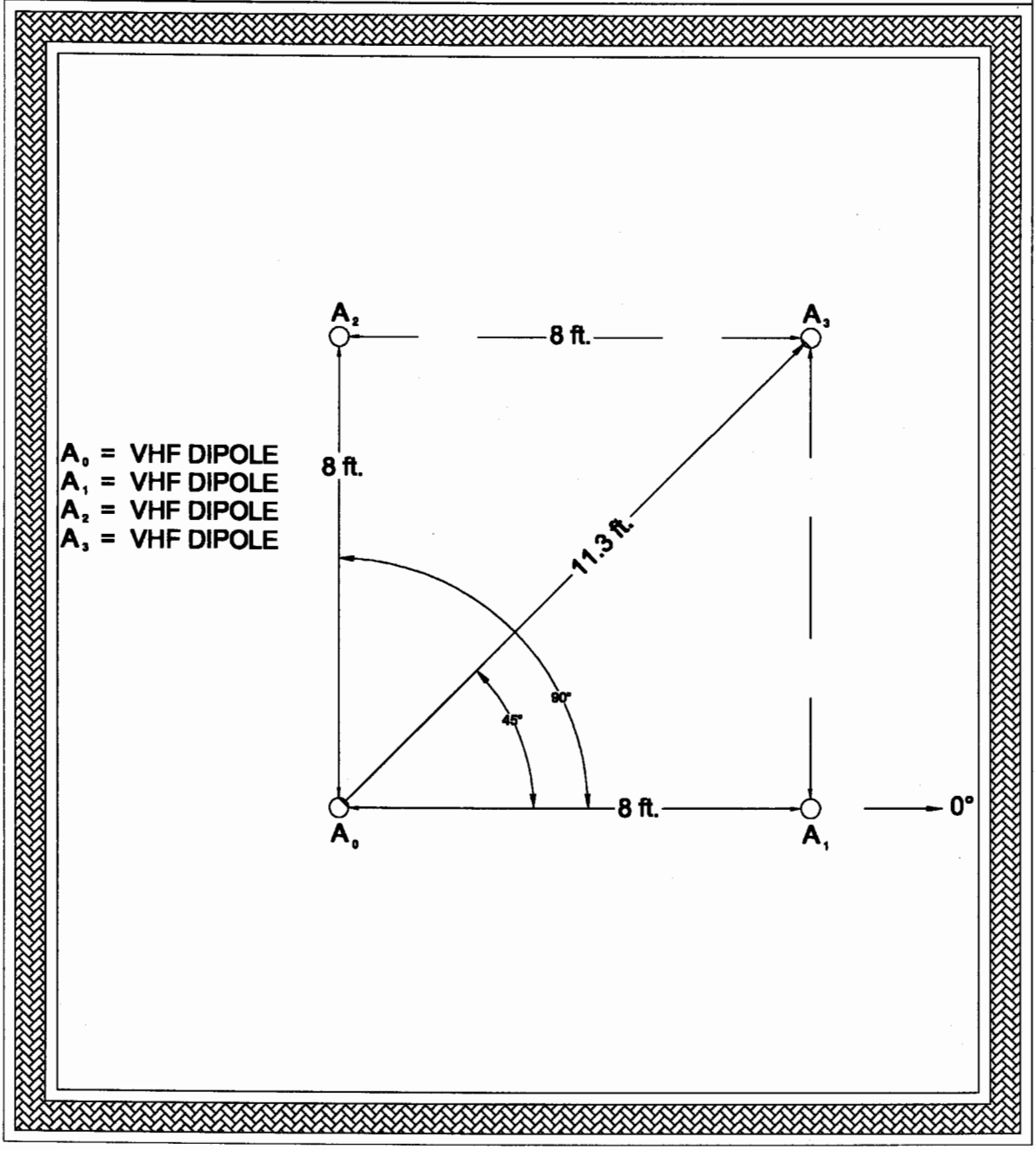

TABLE 18. COMPUTER GENERATED ANALYSIS OF HORIZONTAL DISTORTION

AO To A1			AO To A2			AO To A3			
Gain (Rel)	1.64		Gain (Rel)	1.64		Gain (Rel)	1.64		Composite
Freq (MHz)	125		Freq (MHz)	125		Freq (MHz)	125		Antenna
Range (ft)	8.00		Range (ft)	8.00		Range (ft)	11.31		Pattern
Delta Theta	(Deg) 0		Delta Theta	(Deg) 90		Delta Theta	(Deg) 45		Max. Neg.
	Distortion			Distortion			Distortion		Value is Pattern
AZ (Deg)	Rel	dB	AZ (Deg)	Rel	dB	AZ (Deg)	Rel	dB	Distortion
0	1.1279	1.05	0	1.1262	1.03	0	.9136	-.78	1.29
10	1.0523	.44	10	1.1278	1.04	10	.9330	-.60	.89
20	.9211	-.71	20	1.1265	1.03	20	.9974	-.02	.30
30	.8732	-1.18	30	1.1047	.86	30	1.0438	.37	.06
40	.9442	-.50	40	1.0426	.36	40	1.0632	.53	.40
50	1.0426	.36	50	.9442	-.50	50	1.0632	.53	.40
60	1.1047	.86	60	.8732	-1.18	60	1.0438	.37	.06
70	1.1265	1.03	70	.9211	-.71	70	.9974	-.02	.30
60	1.1278	1.04	80	1.0532	.44	80	.9330	-.60	.89
90	1.1262	1.03	90	1.1279	1.05	90	.9136	-.78	1.29
100	1.1278	1.04	100	1.0740	.62	100	.9983	-.01	1.65
110	1.1265	1.03	110	.9437	-.50	110	1.0878	.73	1.26
120	1.1047	.86	120	.8717	-1.19	120	1.0359	.31	-.02
130	1.0426	.36	130	.9215	-.71	130	.9165	-.76	-1.11
140	.9442	-.50	140	1.0180	.16	140	.9696	-.27	-.61
150	.8732	-1.18	150	1.0886	.74	150	1.0841	.70	.26
160	.9211	-.71	160	1.1201	.99	160	1.0465	.39	.67
170	1.0523	.44	170	1.1279	1.05	170	.9328	-.60	.88
180	1.1279	1.05	180	1.1265	1.05	180	.9212	-.71	1.38
190	1.0740	.62	190	1.1279	1.05	190	.9986	-.01	1.65
200	.9437	-.50	200	1.1201	.99	200	1.0624	.53	1.01
210	.6717	-1.19	210	1.0886	.74	210	1.0869	.72	.27
220	.9215	-.71	220	1.0180	.16	220	1.0908	.75	.20
230	1.0180	.16	230	.9215	-.71	230	1.0908	.75	.20
240	1.0886	.74	240	.8717	-1.19	240	1.0869	.72	.27
250	1.1201	.99	250	.9437	-.50	250	1.0624	.53	1.01
260	1.1279	1.05	260	1.0740	.62	260	.9986	-.01	1.65
270	1.1265	1.05	270	1.1279	1.05	270	.9212	-.71	1.38
280	1.1279	1.05	280	1.0523	.44	280	.9328	-.60	.88
290	1.1201	.99	290	.9211	-.71	290	1.0465	.39	.67
300	1.0886	.74	300	.8732	-1.18	300	1.0841	.70	.26
310	1.0180	.16	310	.9442	-.50	310	.9696	-.27	-.61
320	.9215	.71	320	1.0426	.36	320	.9165	-.76	-1.11
330	.6717	-1.19	330	1.1047	.86	330	1.0359	.31	-.02
340	.9437	-.50	340	1.1265	1.03	340	1.0878	.73	1.26
350	1.0740	.62	350	1.1278	1.04	350	.9983	-.01	1.65
360	1.1279	1.05	360	1.1262	1.03	360	.9136	-.78	1.29

APPENDIX 8. DETERMINATION OF RECEIVER DESENSITIZATION AND TRANSMITTER INTERMODULATION PRODUCT INTERFERENCE

1. **GENERAL.** The receiver desensitization and transmitter IM interference subjects are introduced in chapter 6. This appendix provides a more detailed approach to receiver desensitization and transmitter IM interference. Special worksheets and appropriate instructions have been developed for evaluating the extent of desensitization and IM interference from which the operating margin of safety can be determined.

a. **Receiver Desensitization.** Receiver function of the transmitter RF output power, system RF gains and losses, distance between transmit and receive antennas, and frequency separation between desired and undesired signals. Paragraph 2 describes the system RF parameters that contribute to receiver desensitization. Paragraph 3 of this appendix provides sample calculations to determine the level of receiver desensitization signals. Figures 9 and 10 of appendix 5 assist in determining the antenna separations that would be required to prevent or eliminate receiver desensitization effects. The most effective alternative is to keep transmitter to receiver antenna separation 120 feet or more.

b. **Transmitter Intermodulation ™ Product Interference.** Transmitter IM product interference occurs when two or more frequencies produce IM products on a desired receive frequency. One method used to attenuate or eliminate IM product interference is by adequately separating transmitter and receiver antennas. A second and more common method of attenuating IM interference is to install ferrite isolators and tuned cavity filters (bandpass, notch or combiner cavities). Paragraph 4 describes the system parameters that contribute to transmitter intermodulation product interference. Paragraphs 5 and 6 provide sample calculations to determine the extent and level of IM product interference and the additional attenuation needed to reduce the IM product interference to an acceptable level. Curves in figures 11 through 16 of appendix 5 were developed to assist the field engineer in analyzing and minimizing interference effects.

2. **RECEIVER DESENSITIZATION.** A typical worksheet for evaluating the extent of desensitization or the operating margin of safety is presented in Table 19, Receiver Desensitization Worksheet. All system gain/loss parameters are also listed. Columns are provided for various frequency differences between desired and undesired signals. Frequency dependent parameters are inserted in the appropriate columns. Parameters that are not frequency dependent are represented by fixed values in each column. Parameters not applicable to a particular system are left blank. The signal level derived at the bottom of each column indicates whether a signal (at that particular separation) has sufficient power to cause desensitization. A brief description of each listed parameter and other parameters follows:

TABLE 19. RECEIVER DESENSITIZATION WORKSHEET

SYSTEM PARAMETERS		FREQUENCY SEPARATION BETWEEN DESIRED AND UNDESIRED SIGNAL											
		2 MHz	1 MHz	0.5 MHz	0.2 MHz	0.1 MHz	90 kHz	80 kHz	70 kHz	60 kHz	50 kHz	40 kHz	30 kHz
Transmitter Power Output Level	dBm												
Isolator Insertion Loss	dB												
Filter Insertion Loss	dB												
Coax Cable Attenuation (Transmit)	dB												
Antenna Gain (Transmit)	dB												
Space Attenuation	dB												
Collinear Antenna Isolation	dB												
Antenna Gain (Receive)	dB												
Coax Cable Attenuation (Receive)	dBm												
Multi Receiver Coupling Attenuation	dB												
Filter Attenuation	dB												
Receiver Attenuation to Off-Freq.	dB												
Signal Level Input to Detector	dBm												
Reqd Sig Level Must be Below Reference Squelch Level	dB	-97.5	-97.5	-97.5	-97.5	-97.5	-97.5	-97.5	-97.5	-97.5	-97.5	-97.5	-97.5
Additional Atten. Reqd to Eliminate Destination	dB dB												
(1) VHF Receiver Off-Freq. Atten.	dB	100	100	100	96	91	82	73	64	56	47	39	30
(1) UHF Receiver Off-Freq. Atten.	dB	100	100	94	87	81	74	66	59	52	44	37	30

(1) These Average Values of Front End Attenuation Should be used in the Absence of Better Data

a. **Transmitter Output Level.** This is the power level of the transmitter RF output at the RF output connector in dBm. This value should be inserted in the worksheet (table 19) in each frequency separation column under consideration.

b. **Transmitter to combiner coax cable Attenuation.** This is the section of coax feedlines between the transmitter and the isolator, if used, and the combiner. This may be a single section of coaxial cable, or if isolators are used, it may consist of several sections of coaxial cable.

c. **Isolator Insertion Loss.** Insert the appropriate value only if an isolator exists in the system. Typically, the value is 0.3 to 0.5 dB.

d. **Isolator Reverse Isolation.** Insert appropriate value only if an isolator exists in the system. The value is typically 30 to 40 dB.

e. **Filter Insertion Loss.** This may be a harmonic filter used with an isolator, or it may be tuned cavity filter.

f. **Transmitter combiner cavity Insertion Loss.** Insert the transmit combiner cavity insertion loss. This loss will vary depending on the number of cavities used and the depth if the input and output coupling loops. The loss is typically 0.5 to 2.0 dB per cavity, depending on the coupling settings.

g. **Transmitter Combiner Transmitter/Transmitter Isolation.** This is the isolation, in dB, between transmitters that are connected to the transmitter combiner assembly.

h. **Combiner to Antenna Coaxial Cable Attenuation.** This is the section of coaxial cable between the transmitter combiner phasing cable common output connector and the antenna.

i. **Transmit Antenna Gain.** Insert the rated maximum gain of the transmit antenna in dB. See table 6 in appendix 3.

j. **Space Attenuation.** This is the free space path loss between the transmit and receive antennas. See figure 17 of appendix 5.

k. **Collinear Antenna Isolation.** Refer to the manufacturer's specifications (table 6 for TACO and APC antennas) or the results from measured tests.

l. **Receive Antenna Gain.** Insert the rated maximum gain of the receive antenna in dB. See table 6 in appendix 3.

m. **Antenna to Receiver Multicoupler Coaxial Cable Attenuation.** This is the section of the coaxial cable feedline between antenna and the receive antenna and the receiver frequency multiplexer. The attenuation value

represents total losses between the antenna connector and the receiver frequency multiplexer.

n. **Receiver Multicoupler Preselector Loss.** Insert the loss contributed by the receiver multicoupler preselector. The loss is typically 2.0 dB.

o. **Receiver multicolored Splitter Loss.** Insert the appropriate value for the receiver multicoupler amplifier gain or loss when it is applicable. A typical figure for an active amplifier type multicoupler is 18 dB gain for VHF and 17 dB gain for UHF.

p. **Receiver Multicoupler.** This is the loss due to splitting the signal for multiple receivers. A typical figure for eight multicoupler output loads is 10.5 dB loss.

q. **Receiver Filter Insertion Loss.** The IM product affecting the receiver is in on-frequency signal. Therefore, if a filter is used, the figure for insertion loss should be listed.

r. **Receiver Filter Attenuation.** Use only when a filter is installed or when checking attenuation value for interference elimination. Filter attenuation increases sharply as frequency separation increases. Refer to manufacturer's specification.

s. **Receiver Attenuation to Off-Frequency Signals.** Determine from published characteristics of the specific receiver or from measured receiver front-end attenuation characteristics.

t. **Signal level Input to Detector.** RF power level (in dBm) present at the input to the receiver detector. This power level is determined by algebraically adding all gains and losses to the transmitter power output level.

u. **Additional Attenuation Required.** Additional attenuation required to eliminate possible receiver desensitization is the difference between the reference squelch level and the signal input to the detector. Typical squelch levels are 1.5 to 2.0 microvolts (-103.5 to -101 dBm).

3. **EXAMPLE OF RECEIVER DESENSITIZATION CALCULATIONS USING WORKSHEET.** VHF and UHF receivers used in FAA air-to-ground communications service are designed to specifications that call for 100 dB attenuation to receiver off-frequency signals of 0.5 MHz or greater from the desired receiver frequency. When the frequency difference between the interfering and desired signal becomes less than 0.5 MHz, the receiver's off-frequency input attenuation characteristics decrease rapidly.

a. **Receiver Desensitization Sample Calculation No. 1.**

(1) **Sample Worksheet.** The first sample calculation is illustrated using the Receiver Desensitization Worksheet (sample), Table 20. For example, a VHF transmitter output is 50 watts, there is a total of 2.5 dB coaxial cable loss, and an antenna gain of 1 dB. The receive antenna is spaced 80 feet distance from the transmit antenna, representing a space loss of 42 dB. The receive antenna has a 1 dB gain and a coaxial cable loss of 2.5 dB. The receiver off-frequency input attenuation figure is taken from the average values for VHF tabulated on the worksheet. Isolators, transmitter combiner cavities, and receiver multicouplers are not considered.

(2) The sample shows that 3.5/12.5 dB receiver (VHF/UHF) desensitization will occur at a frequency separation of 0.2 MHz for a squelch of 3 uV. For a squelch of 1.5 uV, the dB values go to 9.5/VHF and 18.5/UHF. The input bandpass characteristics of individual receivers may vary as much as 20 dB greater than the specification value shown, therefore, desensitization of 3.5 dB may occur in some receivers and not in others. In marginal cases, as given by this example, the actual bandpass characteristics of the particular receiver should be verified to obtain a more accurate value of receiver desensitization.

TABLE 20. RECEIVER DESENSITIZATION WORKSHEET (SAMPLE)

SYSTEM PARAMETERS		FREQUENCY SEPARATION BETWEEN DESIRED AND UNDESIRED SIGNAL											
		2 MHz	1 MHz	0.5 MHz	0.2 MHz	0.1 MHz	90 kHz	80 kHz	70 kHz	60 kHz	50 kHz	40 kHz	30 kHz
Transmitter Power Output Level	dBm	47	47	47	47								
Isolator Insertion Loss	dB												
Filter Insertion Loss	dB												
Coax Cable Attenuation (Transmit)	dB	2.5	2.5	2.5	2.5								
Antenna Gain (Transmit)	dB	1.0	1.0	1.0	1.0								
Space Attenuation	dB	42	42	42	42								
Collinear Antenna Isolation	dB												
Antenna Gain (Receive)	dB	1.0	1.0	1.0	1.0								
Coax Cable Attenuation (Receive)	dBm	2.5	2.5	2.5	2.5								
Multi Receiver Coupling Attenuation	dB												
Filter Attenuation	dB												
(1) Receiver Attenuation to Off-Freq.	dB	100	100	100	96								
Signal Level Input to Detector	dBm	-96	-96	-96	-94								
Reqd Sig Level Must be Below Reference Squelch Level	dB	-97.5	-97.5	-97.5	-97.5	-97.5	-97.5	-97.5	-97.5	-97.5	-97.5	-97.5	-97.5
Additional Atten. Reqd to Eliminate Destination	dB dB												
(1) VHF Receiver Off-Freq. Atten.	dB	100	100	100	96	91	82	73	64	56	47	39	30
(1) UHF Receiver Off-Freq. Atten.	dB	100	100	94	87	81	74	66	59	52	44	37	30

(1) These Average Values of Front End Attenuation Should be used in the Absence of Better Data

b. **Receiver Multicoupler Input Level Sample Calculation No. 2.** The active multicoupler amplifier is also subject to being overdriven. The second sample calculates the peak envelope power at the output of the multicoupler. Two example amplifiers used in modern active multi- couplers are manufactured by TRW. The TRW VHF Type CA-2818 amplifier is overdrives when its output reaches the 30 dBm level. The TRW UHF Type CA-2800 amplifier is overdriven when its output reaches 24 dBm. The worst case occurs when all transmitters are keyed simultaneously and their RF carriers become inphase. The RCF configuration being considered below is equipped with four VHF transmitters combined with transmitter combiners and a single receiver connected to the output of a receiver multicoupler.

(1) Transmitter output power 10 watts..... +40.0 dBm

(2) Coaxial cable to combiner attenuation..... -0.3 dB

(3) Combiner insertion loss..... -1.8 dB

(4) Coaxial cable attenuation to antenna..... -0.8 dB

(5) Transmit antenna gain..... 0.0 dB

(6) Free space path loss (80 feet)..... -42.0 dB

(7) Receive antenna gain..... 0.0 dB

(8) Coaxial cable attenuation from antenna..... -0.8 dB

(9) Multicoupler preselector loss..... -2.0 dB

(10) Multicoupler splitter insertion loss..... -10.5 dB

(11) Multicoupler amplifier gain..... +18.0 dB

(12) Peak Envelope Power...(Results)..... **-0.2 dBm**

(13) Peak Envelope Power at Multicoupler Output -0.2 dBm = 0.00096 watts

(14) 0.00096 watts = I2R = IE;

R = 50 ohms; I = 0.0044 A; E = 0.22 V

(15) P_{peak} = (No. of carriers)2 x (1.41) 0.0044 x (1.41) 0.22

= watts

(16) With four carriers:

P_{peak} = 16 x 0.006 x 0.31 = 0.03 watts = 14.5 dBm

4. **TRANSMITTER INTERMODULATION PRODUCT INTERFERENCE.** Sample worksheets are provided in table 21 and paragraph 6 of this appendix as an aid in evaluating transmitter IM interference. All system gain/loss parameters that might appear in a communications system are listed in the figures. Columns are provided for various frequency separations from 0.1 MHz to 2.0 MHz. Those parameters not applicable to a particular system should be left blank. A brief explanation of each listed parameter and other parameters follows.

TABLE 21. TRANSMITTER INTERMODULATION PRODUCT INTERFERENCE PARAMETERS

SYSTEM PARAMETERS		FREQUENCY SEPARATION					
		2 MHz	1 MHz	0.5 MHz	0.3 MHz	0.2 MHz	0.1 MHz
Power Out (Tx #1)	dBm						
Isolator Insertion Loss	dB						
Filter Insertion Loss	dB						
Coax Cable Attenuation (Tx #1)	dB						
Antenna Gain (Tx #1)	dB						
Space Attenuation	dB						
Collinear Antenna Isolation	dB						
Antenna Gain (Tx #2)	dB						
Coax Cable Attenuation (Tx #2)	dB						
Filter Attenuation	dB						
Isolator Attenuation	dB						
IM Attenuation (Tx #2)	dB						
Isolator Insertion Loss	dB						
Filter Attenuation	dB						
Coax Cable Attenuation (Tx #2)	dB						
Antenna Gain (Tx #2)	dB						
Collinear Antenna Isolation	dB						
Space Attenuation	dB						
Antenna Gain (Rx)	dB						
Coax Cable Attenuation (Rx)	dB						
Filter Insertion Loss	dB						
Mult. Receiver Coupling Attenuation	dB						
IM Product Level at Receiver Input	dBm						
IM Product Level Must be at Least 14dB Below Reference Squelch Level	dBm	-111.5	-111.5	-111.5	-111.5	-111.5	-111.5
Additional Attenuation Required to Eliminate Interference	dB						

Tx #1 MHz

Tx #2 MHz

a. **Transmitter No. 1 Output Level.** Power level of the transmitter No. 1 RF output at the output connector is in dBm. This value should be inserted in each frequency separation column under consideration. Ten watts equal 40 dBm.

b. **Transmitter No. 1 to Combiner Coaxial Cable Attenuation.** This is the section of coaxial feedline between the transmitter and the isolated, if used, and the combiner. It may be a single section of coaxial cabled or if isolators are used, it may consist of several sections of coaxial cable.

c. **Transmitter No. 1 Isolator Insertion Loss.** Insert appropriate value only if an isolator exists in the transmitter No. 1 system. Topically, value is 0.3 to 0.5 dB loss.

d. **Transmitter No. 1 Isolated Reverse Isolation.** Insert appropriate value only if an isolator exists in the transmitter No. 1 system. Typically, value is 35 to 40 dB isolation.

e. **Filter Insertion Loss.** This may be a harmonic filter used with an isolator, or it may be a tuned cavity filter.

f. **Transmitter No. 1 Combiner Cavity Insertion Loss.** Insert the transmitter combiner cavity insertion loss. This loss will vary dependent on the number of cavities used and the depth of the input and output coupling loops. See figures 45 and 46, typically 0.5 dB insertion loss per cavity.

g. **Transmitter No. 1 combiner Transmitter/Transmitter Isolation.** This is the isolation, in dB, between transmitters that are connected to the transmitter No. 1 transmitter combiner assembly. See figures 45 and 46.

h. **Transmitter No. 1 combiner to Antenna coaxial cable Attenuation.** This is the section of coaxial cable between the transmitter combiner phasing cable common output connector and the antenna.

i. **Transmitter No. 1 Antenna Gain.** Insert the rated maximum gain of the transmitter No. 1 antenna in dB. TACO and APC non-directional vertical collinear antenna elements are rated at zero dB gain.

j. **Collinear Antenna Isolation.** Refer to the specifications (table 10 for TACO and APC antennas) or the results from measured tests.

k. **Space Attenuation.** This is the free space path loss between See figure 17 of appendix 5.

FIGURE 45. SINGLE VHF TRANSMITTER COMBINER EIGHT-INCH ALUMINUM CAVITY INSERTION LOSS

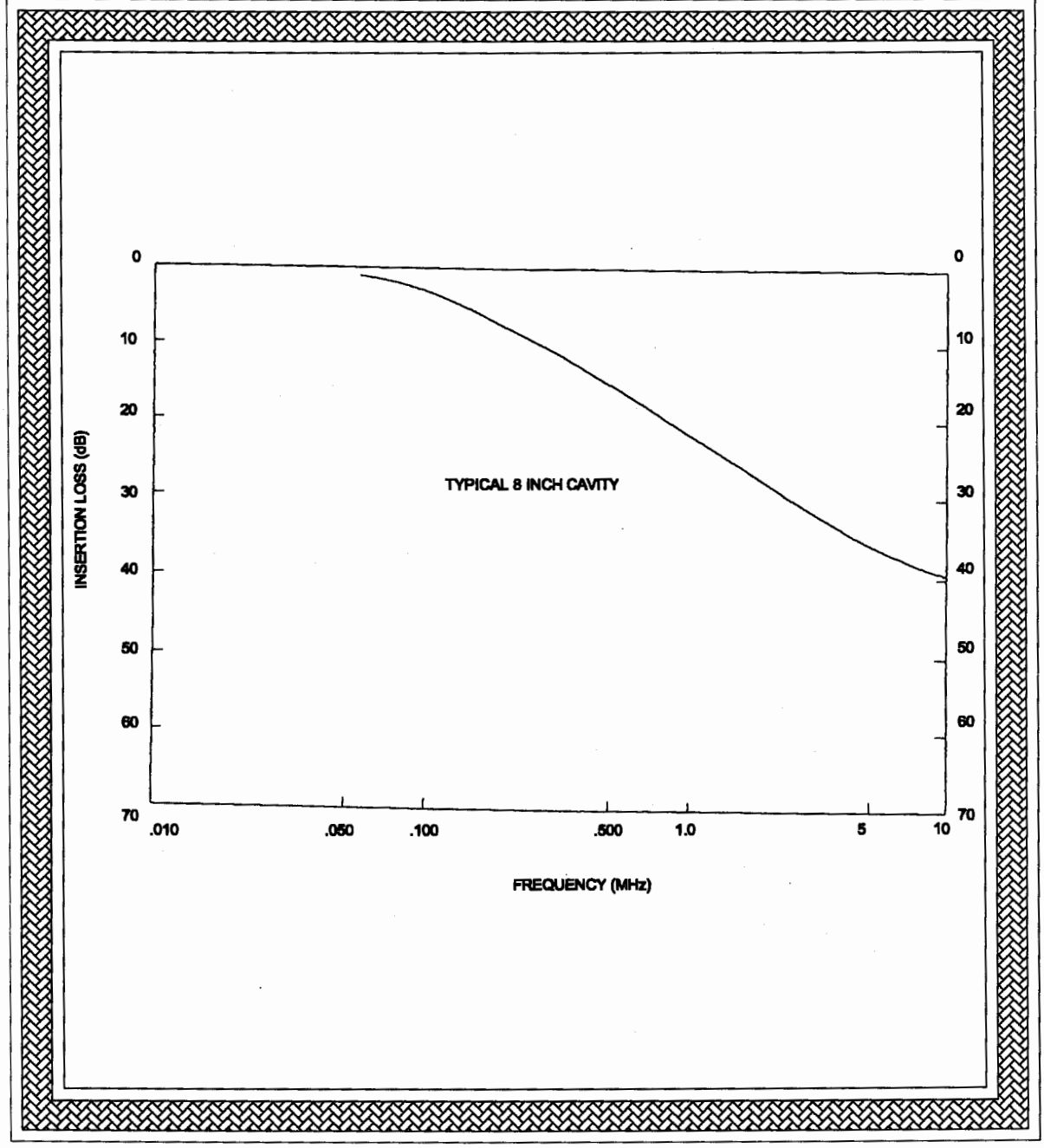

FIGURE 46. SINGLE UHF TRANSMITTER COMBINER EIGHT-INCH ALUMINUM CAVITY INSERTION LOSS

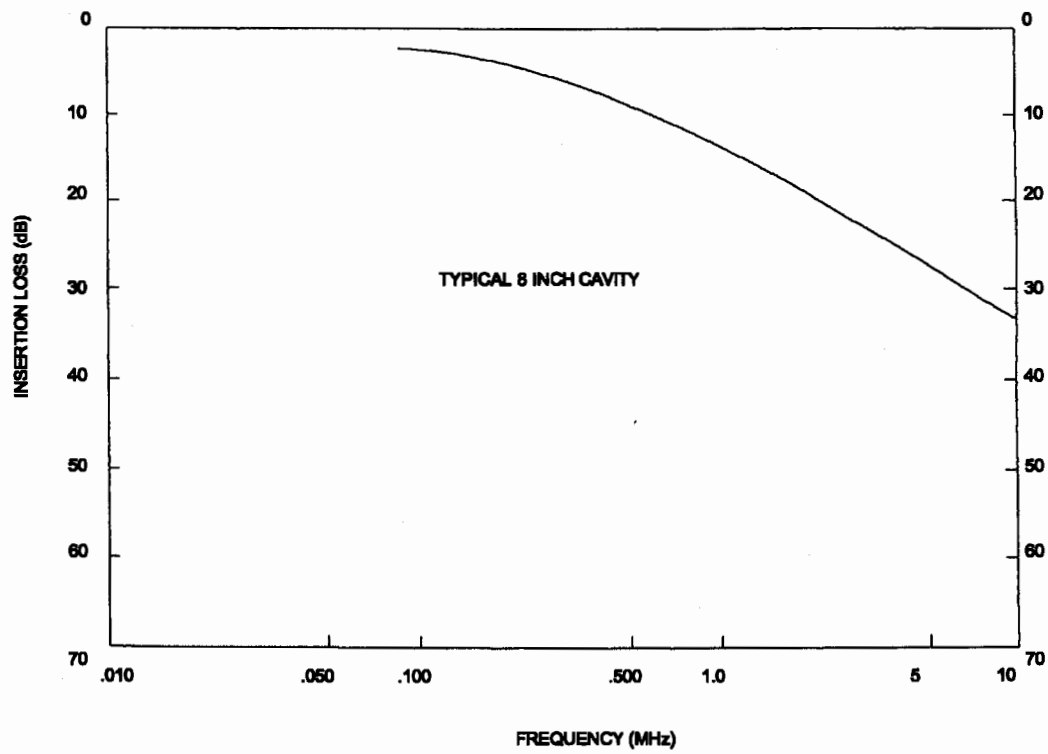

l. **Transmitter No. 2 Output Level.** This is the power level of the transmitter No. 2 RF output at the output connector in dBm. This value should be inserted in each frequency separation column under consideration.

m. **Transmitter No. 2 IM Product Attenuation.** This is a design characteristic of the transmitter. Depending on the transmitter used, the appropriate value can be found in Table 22, Transmitter Intermodulation Product Attenuation, for the frequency separation being considered. A typical figure for transmitter IM product attenuation is between 15 and 25 dB.

n. **Transmitter No. 2 to Combiner Coax Cable Attenuation.** This is the section of deadline between the transmitter No. 2 in which the IM products are being generated and the combiner. It may be a single section of coaxial cable, or if isolators are used, it may consist of several sections of coaxial cable.

o. **Transmitter No. 2 Isolated Reverse Isolation.** When a ferrite isolator is used, this is the attenuation presented to a signal passing through the isolator in the reverse direction. A typical value is 35 to 40dB.

p. **Transmitter No. 2 Isolated Insertion Loss.** This is the same isolator referred to in subparagraph 40 of this appendix but the IM product signal is passing in the forward direction. A typical figure for insertion loss is 0.3 to 0.5 dB.

q. **Filter Attenuation.** The filter in this case is a resonant cavity in transmitter No. 2. The frequency of the incoming signal is offset from the resonant frequency of the cavity by the frequency difference between transmitters No. 1 and No. 2. The typical attenuation value is found from Table 23, Filter Device Attenuation.

r. **Transmitter No. 2 Combiner Cavity Insertion Loss.** Insert the transmit frequency combiner cavity insertion loss. This loss will vary dependent on the number of cavities used and the depth of the input and output coupling loops.

s. **Transmitter Combiner Transmitter/Transmitter Isolation.** This is the isolations in dB, between transmitters that are connected to the frequency combiner assembly. See figures 45 and 46.

t. **Transmitter No. 2 Combiner to Antenna Coaxial Cable Attenuation.** This is the section of coaxial cable, in which the IM products are being generated, that is connected between the transmitter No. 2 frequency combiner phasing cable common output connector and the antenna.

TABLE 22. TRANSMITTER INTERMODULATION PRODUCT ATTENUATION

TRANSMITTER TYPE	FREQUENCY SEPARATION											
	5.0 MHz	4.0 MHz	3.0 MHz	2.0 MHz	1.0 MHz	0.5 MHz	0.3 MHz	0.2 MHz	0.1 MHz			
AN/GRT - 21 W/Amplifier (50W)	68.5	65.0	60.5	55.0	47.0	33.0	22.0	22.0	22.0			
AN/GRT -21 (10 W Exciter)	21.0	21.0	21.5	22.0	22.0	21.5	21.5	21.0	21.0			
TV - 35 (BW) (Carrier On)	65.0	63.0	61.0	57.0	49.0	43.3	33.0	24.0	24.0			
TV - 35 (Carrier Off)	16.4	16.4	16.4	16.4	16.4	16.4	16.4	16.4	16.4	IM Caused by Two Other Transmitters		
(1) TV - 36 (50 W)	70.0	68.0	63.5	53.0	46.0	33.0	25.0	23.0	23.0			
(1) AN/GRT - 22 W/AMP (50 W)	65	60	55	47	35	27	22	22	22			
(1) AN/GRT - 22 W/AMP (10 W Exciter)	21	21	21.5	22	22	21.5	21.5	21	21			

(1) Extrapolated from data on typical cavities for UHF.

(2) Extrapolated from data on tVHF Exciter.

TABLE 23. FILTER DEVICE ATTENUATION

EQUIPMENT TYPE	FREQUENCY SEPARATION								
	5.0 MHz	4.0 MHz	3.0 MHz	2.0 MHz	1.0 MHz	0.5 MHz	0.3 MHz	0.2 MHz	0.1 MHz
Single Cavity 0.5 dB Insertion Loss	20.0	17.0	13.0	11.0	6.5	2.5	1.0	0.5	0.5
Single Cavity 1.0 dB Insertion Loss	26.0	24.0	22.0	18.0	13.0	7.0	5.0	1.0	1.0
Single Cavity 3.0 dB Insertion Loss	31.5	30.0	28.0	25.0	19.0	12.0	9.0	3.0	3.0
Dual Cavity 1.0 dB Insertion Loss	45.0	42.0	37.0	30.0	20.0	7.0	3.0	1.0	1.0
Dual Cavity 2.0 dB Insertion Loss	56.0	52.0	47.0	42..5	3.0	17.0	8.0	5.0	2.0
Dual Cavity 6.0 dB Insertion Loss	71.0	67.0	61.5	55.0	45.0	33.0	23.0	15.0	6.0
Triple Cavity 1.5 dB Insertion Loss	72.0	65.5	57.5	48.0	30.0	11.0	3.0	2.0	1.5
Triple Cavity 3.0 dB Insertion Loss		80.0	76.0	66.0	50.0	29.0	15.0	60.	3.0
Triple Cavity 6.0 dB Insertion Loss				84.0	67.5	43.0	33.0	26.0	12.0
Ferrite Isolator 0.5 dB Insertion Loss	23	25	25	25	25	25	25	25	25
Harmonic Suppression Filter 0.1dB Insertion Loss	← 43 dB or Better at 2nd Harmonic →								

u. Transmitter No. 2 Antenna Gain. Insert the rated maximum gain of the transmitter No. 2 antenna in dB. See table 10 for TACO and APC antennas.

v. Collinear Antenna Isolation. Refer to the manufacturer's specifications (table 10 for TACO and APC antennas) or the results from measured tests.

w. Space Attenuation. This is the free space path loss between transmitter No. 2 and the receive antenna. See figure 17, for appendix 5.

x. Receive Antenna Gain. Insert the rated maximum gain of the receive antenna in dB. See table 10 for TACO and APC antennas.

y. Antenna to Receiver Multicolored Coaxial Cable Attenuation. This is the section of coaxial cable feedline between the receive antenna and the receiver multicoupler. The attenuation value represents total losses between the antenna connector and the input connector of the receiver multicoupler.

z. Receiver Multicoupler Preselector Insertion Loss. The receiver multicoupler preselector VHF and UHF bandpass preselector insertion loss is typically 2 dB.

aa. Receiver Multicolored glorifier Gain/loss. Insert the appropriate value for the receiver multicoupler amplifier gain or loss when it is applicable. A typical value for an active amplifier type multicoupler is 18 dB gain for VHF and 17 dB gain for UHF.

bb. Receiver multicolored Splitter Loss. This is the loss due to splitting the signal for multiple receivers. A typical figure for eight multicoupler output loads is 10.5 dB loss.

cc. Receiver Filter Insertion Loss. The IM product affecting the receiver is an on-frequency signal. Therefore, if a filter is used, the figure for insertion loss should be listed.

dd. Receiver Attenuation to Off-Frequency Signals. Determined from published characteristics of the specific receiver or from measured receiver front-end attenuation characteristics. See figure 18 of appendix 5.

ee. Signal level Input to Detector. RF power level (dBm) present at the input to the receiver detector. The power level is determined by algebraically adding all gains and losses to the transmitter power output level.

ff. Additional Attenuation Required. Additional attenuation required to eliminate possible receiver desensitization is the difference between the reference squelch level and the signal input to the detector.

gg. **IM Product Level at Receiver Input.** RF power level (dBm) of the interfering signal at the input to the receiver. This bower level is determined by algebraically adding all gains and losses to the transmitting power output level.

hh. **Additional Attenuation Required.** To prevent interference, the IM product level must be less than -111.5 dBm to obtain a 14-dB desired-to-undesired signal ratio. If not, the additional attenuation is required to eliminate (or prevent) the interference between the IM product level (-115.5 dBm) and the IM level at the input to the receiver.

5. CALCULATIONS (USING WORKSHEET) OF IM PRODUCT INTERFERENCE AT AN RCF COLLOCATED AT A VORTAC.

a. **Transmitter Intermediation Product Example No. 1.** The first example is based on the RCF that is collocated at a VORTAC site, illustrated in Table 24, Transmitter Intermodulation Product Interference Worksheet. See worksheet (sample) in table 25.

(1) Two 10-watt GRT-21 transmitters are connected through a transmitter combiner to a VHF antenna mounted on let-down pole that is located 60 feet from the center of the VORTAC antenna array.

(2) The receive antenna is mounted on a let-down pole located 120 feet from the transmit antenna. The receive antenna is 60 feet from the center of the VORTAC antenna array opposite the transmit antenna.

(3) The receiver is tuned to a frequency subject to third-order IM product interference ($2F_2 - F_1$.).

(4) The two transmit frequencies are 120.6 and 121.3 MHz, and the receive frequency 122.0 MHz.

b. **Antenna Spacings to Avoid to Interference.** A transmit-to-transmit antenna separation of 120 feet requires a transmit-to-receive antenna separation of 450 feet. Refer to figure 12 of appendix 5. Since the transmit-to-receive antenna separation is actually 85 feet, the transmit-to-transmit antenna separation must be at least 650 feet. Since this distance is not practical at an RCF collocated at a VORTAC site for eliminating IM product interference, the worksheet is used to determine the additional attenuation required in order to maintain the antenna separation existing at the VORTAC.

TABLE 24. TRANSMITTER INTERMODULATION PRODUCT INTERFERENCE WORKSHEET

SYSTEM PARAMETERS		FREQUENCY SEPARATION					
		2 MHz	1 MHz	0.5 MHz	0.3 MHz	0.2 MHz	0.1 MHz
TX #1 RF Output Power Level	dBm						
TX #1 To Combiner Coax Loss	dB						
TX #1 Isolator Insertion Loss	dB						
TX #1 Isolator Reverse Loss	dB						
Filter Insertion Loss	dB						
TX #1 Freq. Combiner Loss	dB						
TX #1 Freq. Comb. TX Loss	dB						
TX #1 Comb. to Ant. Coax Loss	dB						
TX #1 Antenna Gain	dB						
#1 Collinear Antenna Isolation	dB						
Space Attenuation (TX #1/TX #2)	dB						
TX #2 RF Output Power Level	dBm						
TX #2 IM Product Attenuation	dB						
TX #2 to Combiner Coax Loss	dB						
TX #2 Isolator Reverse Loss	dB						
TX #2 Isolator Insertion Loss	dB						
Filter Attenuation	dB						
TX #2 Freq. Combiner Loss	dB						
TX #2 Freq. Combl. TX/TX	dB						
TX #2 Comb. to Ant. Coax Loss	dB						
TX #2 Antenna Gain	dB						
#2 Collinear Antenna Isolation	dB						
Space Attenuation (TX #2/RX)	dB						
Receive Antenna Gain	dB						
Ant to Multicoupler Coax Loss	dB						
Multicoupler Preselector Loss	dB						
Multicoupler Gain/Loss	dB						
Multicoupler Splitter Loss	dB						
Receiver Filter Insertion Loss	dB						
*VHF RX Atten. to Off-Freq. Sig.	dB	100	100	100	98	96	91
*UHF RX Atten. to Off-Freq. Sig.	dB	100	100	94	90	87	81
IM Product Sig. Level at Rcvr.	dBm						
IM Product Level Must be at Least 14 dB Below Reference Squelch Level	dBm	-111.5	-111.5	-111.5	-111.5	-111.5	
Additional Attenuation Required to Eliminate Interference	dB	18.0 dB					

(1) These Average Values of Front End Attenuation Should be used in the Absence of Better Data

TABLE 25. TRANSMITTER INTERMODULATION PRODUCT INTERFERENCE WORKSHEET (SAMPLE)

SYSTEM PARAMETERS		FREQUENCY SEPARATION					
		2 MHz	1 MHz	0.5 MHz	0.3 MHz	0.2 MHz	0.1 MHz
TX #1 RF Output Power Level	dBm			40.0 dBm			
TX #1 To Combiner Coax Loss	dB			-0.3 dBm			
TX #1 Isolator Insertion Loss	dB						
TX #1 Isolator Reverse Loss	dB						
Filter Insertion Loss	dB						
TX #1 Freq. Combiner Loss	dB			-1.0 dBm			
TX #1 Freq. Comb. TX Loss	dB			-34.0 dBm			
TX #1 Comb. to Ant. Coax Loss	dB			-0.8 dBm			
TX #1 Antenna Gain	dB			0.0 dBm			
#1 Collinear Antenna Isolation	dB						
Space Attenuation (TX #1/TX #2)	dB						
TX #2 RF Output Power Level	dBm						
TX #2 IM Product Attenuation	dB			-22.0 dBm			
TX #2 to Combiner Coax Loss	dB			-0.3 dBm			
TX #2 Isolator Reverse Loss	dB						
TX #2 Isolator Insertion Loss	dB						
Filter Attenuation	dB						
TX #2 Freq. Combiner Loss	dB			-0.3 dBm			
TX #2 Freq. Combi. TX/TX	dB			-34.0 dBm			
TX #2 Comb. to Ant. Coax Loss	dB						
TX #2 Antenna Gain	dB						
#2 Collinear Antenna Isolation	dB						
Space Attenuation (TX #2/RX)	dB			-45.5 dBm			
Receive Antenna Gain	dB			0.0 dBm			
Ant to Multicoupler Coax Loss	dB			-0.8 dBm			
Multicoupler Preselector Loss	dB			-2.0 dBm			
Multicoupler Gain/Loss	dB			18.0 dBm			
Multicoupler Splitter Loss	dB			-10.5 dBm			
Receiver Filter Insertion Loss	dB			-93.5 dBm			
*VHF RX Atten. to Off-Freq. Sig.	dB	100	100	100	98	96	91
*UHF RX Atten. to Off-Freq. Sig.	dB	100	100	94	90	87	81
IM Product Sig. Level at Rcvr.	dBm						
IM Product Level Must be at Least 14 dB Below Reference Squelch Level	dBm	-111.5	-111.5	-111.5	-111.5	-111.5	
Additional Attenuation Required to Eliminate Interference	dB	18.0 dB					

(1) These Average Values of Front End Attenuation Should be used in the Absence of Better Data

c. **Transmitter IM Product Sample Calculation No. 1.** Enter all the system gain and loss parameters in the 1 MHz frequency separation column in Table 24, Transmitter IM Product Interference Worksheet. Enter the two transmit frequencies in the appropriate boxes at the bottom of the sheet. A dual cavity transmitter frequency combiner is used in the transmitter output circuit. The combiner attenuates the signal from transmitter No. 1. which enters transmitter No. 2, and then attenuates the IM product leaving transmitter No. 2.

(1) Transmitter #1 output power 10 watts..... +40.0 dBm

(2) Transmitter #1 to combiner coaxial loss..... - 0.3 dB

(3) Combiner insertion loss..... -1.0 dB

(4) Combiner Tx/Tx isolation (path #1) (figure 45, 4.5 MHz separation) ..... -34.0 dB

(5) Coaxial cable attenuation to antenna..... 0.8 dB

(6) Transmit #2 IM product attenuation

(table 18, GRT-21, 1 MHz) ..... -22.0 dB

(7) Transmitter #2 to combiner coaxial loss..... - 0.3 dB

(8) Combiner Tx/Tx isolation (Path #2) (figure 45, 4.5 MHz separation) ..... -34.0 dB

(9) Transmit antenna gain..... - 0.0 dB

(10) Free space path loss (120 feet) (figure 17, appendix 5) -45.5 dB

(11) Receive antenna gain..... 0.0 dB

(12) Antenna to multicoupler coax loss..... - 0.8 dB

(13) Multicoupler preselector loss..... - 2.0 dB

(14) Multicoupler splitter insertion loss..... -10.5 dB

(15) Multicoupler amplifier gain..... +18.0 dB

(16) IM product level (Results)..... **93.5 dB**

d. **IM Product signal level.** The algebraic sum of the above RF level gains and losses determines the IM product level at the input to the receiver (-93.5 dBm). Since the required IM product level is -111.5 dBm, an additional 18 dB attenuation is required to prevent, or eliminate, interference for the configuration under consideration. Different frequency

separations can be investigated by filling in the appropriate columns of table 32 and proceeding as detailed in subparagraph 5b.

6. CALCULATIONS OF IM PRODUCT INTERFERENCE AT A STAND-ALONE RCF USING WORKSHEET.

a. Transmitter Intermodulation Product example No. 2. The second example is based on a stand-alone RCF. See Figure 47, Typical Stand-Alone RCF Intermodulation Product Interference Calculation.

(1) Two 10-watt transmitters are connected to VHF antennas on towers separated by a diagonal distance of 113 feet.

(2) The receive antenna is mounted on a tower located 80 feet from either transmit antenna tower.

(3) The receiver is tuned to a frequency subject to third-order IM product interference ($2F_2 - F_1$).

(4) The two transmit frequencies are 120.6 MHz and 121.3 MHz, and the receive frequency is 122.0 MHz.

(5) Transmitter No. 1 (120.6 MHz) is connected to the lower element of the collinear antenna.

(6) Transmitter No. 2 (121.3 MHz) is connected to the upper element of the collinear antenna.

b. Antenna Spacings to Avoid Intermediation Interference. A transmit-to-transmit antenna separation of 113 feet requires a transmit-to-receive antenna separation of 500 feet. Refer to figure 12 of appendix 5. Since the transmit-to-receive antenna separation is actually 80 feet, the transmit-to-transmit antenna separation must be at least 700 feet. Since this distance is not practical at an RCF site for eliminating IM product interferences the worksheet is used to determine the amount of additional attenuation required in order to maintain the antenna separation existing at the RCF.

FIGURE 47. TYPICAL STAND-ALONE RCF INTERMODULATION PRODUCT INTERFACE CALCULATION

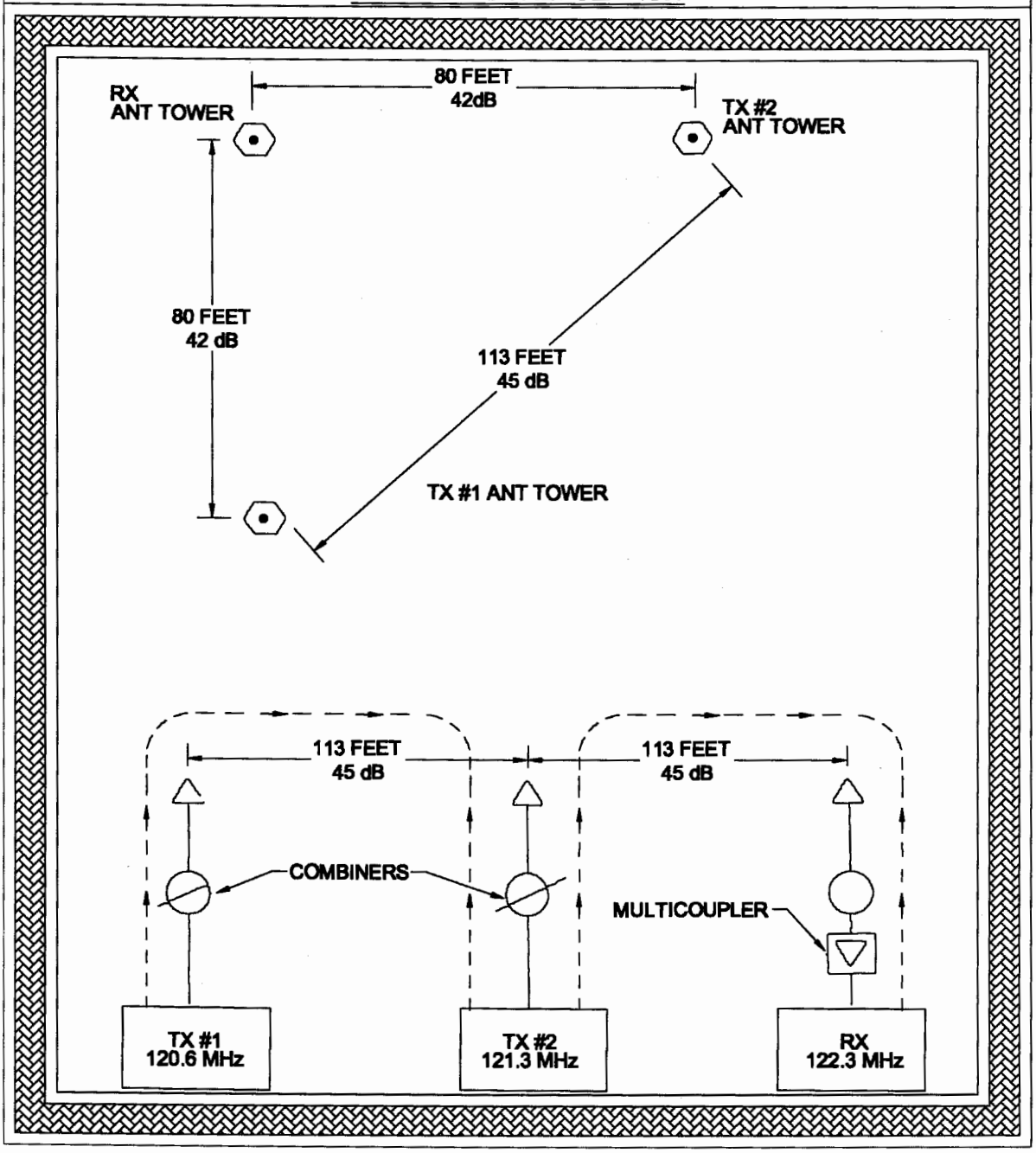

c. **Transmitter IM Product Sample Calculation No. 2.** Enter all the system gain and loss parameters in the 1 MHz frequency separation column in Table 24, Transmitter IM Product Interference Worksheet. Enter the two transmit frequencies in the appropriate boxes at the bottom of the sheet. A dual cavity transmitter frequency combiner is used in the transmitter output circuits.

(1) Transmitter #1 output power 10 watts..... +40.0 dBm

(2) Transmitter #1 to combiner coaxial cable loss..... -0.3 dB

(3) Combiner insertion loss (path #1)..... -1.0 dB

(4) Combiner bridging loss (path #1)..... -0.5 dB

(5) Coax cable attenuation to antenna..... -0.8 dB

(6) Free space path loss (113 feet) (figure 17, appendix 5) -45.0 dB

(7) Coaxial cable attenuation to combiner loss..... - 0.8 dB

(8) Combiner xmtr/xmtr isolation (path #I) (figure 45, 4.5 MHz separation) ..... -34.0 dB

(9) Combiner to transmitter #2 coaxial loss..... -0.3 dB

(10) Transmitter #2 IM product attenuation (table 22, GRT-21, 1 MHz) ..... -22.0 dB

(11) Transmitter #2 to combiner coaxial loss..... -0.3 dB

(12) Combiner xmtr/xmtr isolation (path #2) (figure 45, 700 kHz separation) ..... -34.0 dB

(13) Combiner bridging loss (path #2)..... -0.5 dB

(14) Coax cable attenuation to antenna..... -0.8 dB

(15) Transmit antenna gain (table 6)..... -0.0 dB

(16) Free space path loss (80 feet) (figure 17, appendix 5) -42.0 dB

(17) Receive antenna gain (table 6)..... 0.0 dB

(18) Antenna to multicoupler coaxial loss..... -0.8 dB

(19) Multicoupler preselector loss..... -2.0 dB

(20) Multicoupler splitter insertion loss..... -10.5 dB

(21) Multicoupler amplifier gain..... +18.0 dB

(22) IM product level..(Results)..... **-137.6 dB**

d. IM Product Signal Level. The algebraic sum of the above RF level gains and losses determines the IM product level at the input to the receiver (-137.6 dBm).

e. IM Product at Receiver Input. No additional attenuation is required to prevent or eliminate IM interference for the configuration described, since the -137.6 dBm IM product level is 26.1 dB lower than the required -111.5 dBm IM product level. Note that in this situation the isolators are not required. Different frequency separations can be investigated by filling in the appropriate columns of table 8 and proceeding as detailed in subparagraph 6c.

f. Additional Attenuation. In the event that the applicable configuration requires additional attenuation, an alternate procedure that can be followed is to retune the frequency combiner cavities associated with transmitter No. 2. Referring to the transmitter No. 2 frequency combiner coupling adjustment, its associated insertion loss and frequency bandpass (changing from a 1 dB to a 2 dB insertion loss coupling (for two series connected combiner cavities)) will increase to a 1 MHz off-resonance loss of 10 dB. Note that this off-resonance loss is included twice in the IM product calculations, resulting in a total increase of 20 dB in IM product attenuation.

7. SYSTEM GROUND AND HIGHER ORDER IN PRODUCTS. If IM product interference greater than the fifth order is evident, recheck the RCF and host system grounding. Facilities that are near the sea coal: have been found to have high orders of IM product interference that were corrected when the grounding system joints and connections were cleaned and rebonded.

8. Reserved.

9. Reserved.

10. Reserved.

APPENDIX 9. 30 WATTS VERSUS 50 WATTS OUTPUT POWER

1. **GENERAL.** In radio wave propagation there will be isolated points in space where a "loss-of-communications" is experienced. These points in space can be dynamic, as they change with the time of day, atmospheric conditions, weather, and terrain below. Air Traffic Control (ATC) is familiar with the coverage of their respective Frequency Protected Service Volumes (FPSV), or sectors, from regular day to day operations. Existing transmitter output power is offered in high power (50 Watt) and low power (10 Watt) allocations. The perception that the 2.2 dB difference between transmitter output powers for high power applications (30 Watts as opposed to 50 Watts) would significantly reduce the limits-of-coverage created the need for this on-going investigation. During a March 2003 Stakeholders Meeting, ASR (Spectrum Engineering) requested the Air Ground Communications Program Office investigate a subset of the 11 largest sectors in the National Airspace System (NAS). A series of flight checks would gather operational data and provide a level of confidence to the 30 Watt software analyses. The ASR study mathematically concluded the 2.2 dB difference between coverage provided by an output power of 50 Watts and coverage provided by 30 Watts attributes minimally to aircraft range.

2. **FLIGHT CHECK PLANNING.** Following the same set of procedures and equipment configuration, the flight checks were planned to investigate the limits of coverage. The VHF legacy equipment, either ITT AN/GRT-21/22 or CM-200 transmitters (radio types depended on what was resident at the particular test location) and CM-50 Linear Power Amplifier (LPA), were configured to measure 50 Watts at the RF body. The MDR was configured to measure 30 Watts at the same RF body. The RF body is a common measurement point located at the top of the equipment rack. Both sets of radios again used analog 25 kHz Double Sideband Amplitude Modulation (DSB-AM) and common antennas. The defined procedures lead to the successful baseline of three of the largest sectors in the NAS. The testing occurred in October 2003 at Santa Barbara, CA in sector ZLA-25/28 airspace; November 2003 at Yakima, WA in sector ZSE-47 airspace; and March 2004 at Casper, WY in sector ZDV-32 airspace. Flight Level 330 was used for testing.

3. **FLIGHT CHECK OBJECTIVES.** The flight checks had two main objectives. The first was to capture Received Signal Level (RSL) data using the NASE (NAVAIDS Signal Evaluator) test set. This data showed the affects of various terrains; the affects of the sites' antenna tower height in terms of Above Mean Sea Level (AMSL); provided insight to the phenomenon of vertical lobing; indicated the ducting effect; indicated the affect of the Earth's curvature at great distances from transmitting source, which allowed the flight check team to make real-world empirical comparisons. In parallel, while the RSL data was collecting using the NASE test set, the second objective was to complete a Voice Quality Comparison at pre-determined coordinates and Flight Levels (FL) called Fixes-of-Interest. The pilots and

the in-field NATCA representative reported no discernable difference in voice quality between the test site's existing transmitter output power and the MDR transmitter output for all comparative high power samples. The voice quality measuring scale was developed in coordination meetings prior at Santa Barbara SSC and applied to the three flight checks.

TABLE 26. Voice Quality Measuring Scale

Loud x Clear	Quality Definitions
5 x 5	Fully Audible with No Noise
4 x 5	Slightly Less Audible with No Noise
5 x 4	Fully Audible and Subtle Noise
3 x 3	Significantly Less Audible and Noisy
2 x 2	Very Weak and Very Noisy
1 x 1	Squelch Break Only
0 x 0	No Radio or Loss of Communications

If a legacy transmission had been heard audibly weaker and less clear it would be subjectively measured using this scale. The 1x1 indicates that the aircraft avionics broke squelch but no intelligible information could be relied. The 0x0 indicates a Fix where a "loss-of-communications" occurred due to signal phase minimums or nulls caused by obstructions. If a pilot responded "loud and clear" from a legacy transmission the highest subjectively measured value of "5x5" was applied.

4. FLIGHT CHECK FINDINGS. The operational results of these flight checks were consistent with the ASR 30 Watt software generated analyses and the voice quality measurements added an operational level of confidence to the pilots, controllers and flight check team.

TABLE 27. Flight Check Comparison Table

Flight Check	Antenna AMSL	Flight Level	Voice Quality	Transmit Power	Best Sample at Greatest Distance	Radio Line of Sight	Terrain Description
Santa Barbara, CA	3625 ft	330	5x5	50 W	293 nmi	N/A	Over Water
Avg. Ground Plain	Sea Level		5x5	30W			
Yakima, WA	2205 ft	330	5x5	50 W	176 nmi	189 nmi	Mountainous
Avg. Ground Plain	~ 1014 ft		5x5	30W			
Casper, WY	5768 ft	330	5x5	50 W	172 nmi	180 nmi	High Plateau
Avg. Ground Plain	~ 5732 ft		5x5	30W			Rolling Plains

The range for legacy and MDR radios was similar over land. Once this range was achieved the aircraft no longer received transmissions regardless of output power 50 or 30 Watts. Both Yakima and Casper Remote Communications Air Ground (RCAG) sites had 36 foot antenna towers, but the Yakima RCAG was sited with considerably more elevated terrain with respect to its average ground plain. Regardless of the Antenna AMSL, the data from the NASE test set indicated a sharp drop off of measurable RSL, consistent with the properties of 4/3 Earth's curvature and Radio Line of Sight (RLOS) at both

locations. The Santa Barbara (SBA) flight check which occurred over the Pacific Ocean displayed different characteristics due to radio signal reflection off the ocean and atmospheric conditions common to Southern California. The SBA RCAG site also has a 36 foot antenna tower situated on a mountain ridge recording an Antenna AMSL of 3625 feet. This tremendous height gain coupled with the unique radio propagation properties commonly displayed over water, help to explain how the pilots recorded a 5x5 measure at an extended range at SBA. It is important to note that controllers could not receive the pilot's response at 293 nmi, since the aircraft's transmitter is considered downlink limited. The objective of these flight checks was to compare the legacy ground transmitters' baseline to the MDR's performance.

5. Comments and Conclusions. The flight checks completed at Santa Barbara RCAG, Yakima RCAG and Casper RCAG sites focused on the performance of the ground radios' transmit output power.

a. Signal in space. Signal in space variation between 50 Watts and 30 Watts is 2.2 dB

b. Variation due to vertical lobing. Variation due to vertical lobing can be up to 20 dB, typically 10 dB, but often smaller if the reflected signal is weak compared to the direct signal.

c. Receiver sensitivity. Receiver sensitivity is typically 1.5µV (-103 dBm). This produces a 10 dB (5x5) signal-to-noise ratio, by definition.

d. Receiver squelch. Receiver squelch is typically set to 2.5 µV (-99 dBm)

e. Signal Strength versus Range. Assuming typical 3 dB ground site RF system loss and 6 dB aircraft RF system loss, when in free space:

(1) A 50 Watt transmitter provides -99 dBm signal strength to a range of 750 nmi

(2) A 30 Watt transmitter provides -99 dBm signal strength to a range of 600 nmi

(3) A 10 Watt transmitter provides -99 dBm signal strength to a range of 350 nmi

f. Unuseable Signal. Beyond the radio horizon, outside of atmospheric aide (seen at Santa Barbara), no amount of signal is useable.

g. Signal Strength. Out to the radio horizon (at Yakima and Casper ~180 to 190 nautical miles, both tested at FL 330, the signal is almost always greater than the aircraft receiver squelch setting of -99 dBm. Similar results were seen at Santa Barbara and explain why the pilots recorded 5x5

voice checks until the aircraft reached the horizon or an obstruction null zone.

h. **Custom FTAs.** The FAA can find spectrum benefits by offering customized Facility Transmitting Authorization (FTA) allocations. Transmitter output power reduction can help to reduce co-site and adjacent channel RFI in both the terminal and en route environments.

i. **Current FTAs.** The FAA only regulates transmitter output power in 50 Watt (high power) and 10 Watt (low power) allocations using FTAs.

APPENDIX 10. CONNECTORS BY CABLE TYPE

1. **GENERAL.** This section identifies connectors that are compatible with common cable types.

2. **N-TYPE CONNECTORS FOR VARIOUS ANDREW CORPORATION CABLES.** Table 28 lists N-type connectors manufactured by the Andrew Corporation. The information presented in Table 28 is provided for a convenient reference only. For detailed specification, refer to the manufacturer specifications.

TABLE 28. CONNECTORS BY ANDREW CORPORATION

Cable Type	Connectors				
	Interface	Special Characteristics	Part Number	Contact Attachment	
				Inner	Outer
FSJ1-50A	N-Male	Hex Head	F1PNM-HA	Solder	-
	N-Female	Bulk Head	F1PNF-BH	Solder	
LDF1-50	N-Male	Hex Head	L1PNM-H	Solder	Self-Flare
	N-Male	Hex Head	L1PNM-HC	Captivated	Self-Flare
	N-Male	Right Angle	L1PNR-HC	Captivated	Self-Flare
	N-Female	Bulk Head	L1PNF-BH	Solder	Self-Flare
	N-Female	-	L1PNF	Solder	Self-Flare
	N-Female	-	L1PNF-C	Captivated	Self-Flare
FSJ4-50B	N-Male	Right Angle	F4PNR-HC	Captivated	Self-Flare
	N-Male	Hex Head	F4TNMV2-HC	Captivated	Self-Flare
	N-Female	-	F4XNF-TU	-	-
LDF2-50	N-Male	Hex Head	L2PNM-H	Solder	Self-Flare
	N-Male	Hex Head	L2PNM-HC	Captivated	Self-Flare
	N-Female	-	L2PNF	Solder	Self-Flare
	N-Female	Bulk Head	L2PNF-BH	Solder	Self-Flare
LDF4-50A	N-Male	Ring-Flare	L4PNM-RC	Captivated	Ring-Flare
	N-Male	Hex Head	L4PNM-H	Solder	Self-Flare
	N-Male	Right Angle, Hex	L4PNR-H	Solder	Self-Flare
	N-Male	Right Angle, Hex	L4PNR-HC	Captivated	Self-Flare
	N-Female	Bulk Head	L4PNF-BH	Solder	Self-Flare
	N-Female	Panel Mount	L4PNF-PM	Solder	Self-Flare
	N-Female	Ring-Flare	L4PNF-RC	Captivated	Ring-Flare
VLX5-50	N-Male	One-Piece	V5PNM-RPC	Captivated	-
	N-Female	One-Piece	V5PNF-RPC	Captivated	-

TABLE 28. CONNECTORS BY ANDREW CORPORATION (CONTINUED)

LDF5-50A	N-Male	One-Piece	L5PNM-RPC	Captivated	Self-Flare
	N-Male	Ring-Flare	L5PNM-RC	Captivated	Self-Flare
	N-Female	One-Piece	L5PNF-RCP	Captivated	Self-Flare
	N-Female	Ring-Flare	L5PNF-RC	Captivated	Self-Flare

3. N-TYPE AND BNC CONNECTORS FOR VARIOUS TIMES MICROWAVE CABLE TYPES.

Table 29 lists BNC and N-type connectors manufactured by Times Microwave. The information presented in Table 29 is provided for a convenient reference only. For detailed specification, refer to the manufacturer specifications.

TABLE 29. COMMON TRANSMISSION LINE CONNECTORS BY TIMES MICROWAVE

Cable Type	Connectors						
	Interface	Special Characteristics	Part Number	Coupling Nut	Inner Contact	Outer Contact	Finish (Body/Pin)
LMR-200	BNC-Male	Straight Plug	TC-200-BM	Knurl	Solder	Crimp	Silver/Gold
	N-Male	Straight Plug	EZ-200-NM	Knurl	Spring Fit	Crimp	Silver/Gold
	N-Male	Straight Plug	TC-200-NM	Knurl	Solder	Crimp	Silver/Gold
LMR-400	BNC-Male	Straight Plug	TC-400-BM	Knurl	Solder	Crimp	Nickel/Gold
	N-Male	Straight Plug	SC-400-NM	Knurl	Solder	Crimp	Nickel/Gold
	N-Male	Straight Plug	TC-400-NM	Knurl	Solder	Crimp	Nickel/Gold
	N-Male	Straight Plug	TC-400-NMC	Knurl	Solder	Clamp	Nickel/Gold
	N-Male	Straight Plug	EZ-400-NMH	Hex	Spring Fit	Crimp	Silver/Gold
	N-Male	Straight Plug	TC-400-NMH	Hex	Solder	Crimp	Silver/Gold
	N-Male	Straight Plug	EZ-400-NMK	Knurl	Spring Fit	Crimp	Silver/Gold
	N-Male	Right Angle	TC-400-NMH-RA	Hex	Solder	Crimp	Silver/Gold
	N-Male	Right Angle	TC-400-NMC-RA	Hex	Solder	Clamp	Alloy/Gold
	N-Male	Right Angle	EZ-400-NMH-RA	Hex	Spring Fit	Crimp	Silver/Gold
	N-Female	Straight Jack	TC-400NFC	-	Solder	Clamp	Nickel/Gold

TABLE 29. COMMON TRANSMISSION LINE CONNECTORS BY TIMES MICROWAVE (CONTINUED)

Cable Type	Connectors						
	Interface	Special Characteristics	Part Number	Coupling Nut	Inner Contact	Outer Contact	Finish (Body/Pin)
LMR-400	N-Female	Straight Jack	EZ-400-NF	-	Spring Fit	Crimp	Nickel/Gold
	N-Female	Bulkhead	EZ-400-NF-BH	-	Spring Fit	Crimp	Nickel/Gold
	N-Female	Bulkhead	TC-400-NFC-BH	-	Solder	Clamp	Alloy/Gold
LMR-500	N-Male	Straight Plug	TC-500-NMC	Hex	Solder	Clamp	Silver/Gold
	N-Male	Right Angle	TC-500-NMC-RA	Hex	Solder	Clamp	Silver/Gold
	N-Female	Straight Jack	TC-500-NFC	-	Solder	Clamp	Silver/Gold
	N-Female	Bulkhead Kit	BHA-KIT	-	-	-	-
	N-Male	Straight Plug	EZ-600-NMH-B	Hex	Solder	Clamp	Silver/Gold
	N-Male	Straight Plug	EZ-600-NMK	Knurl	Spring Fit	Crimp	Silver/Gold
	N-Male	Straight Plug	TC-600-NMH	Hex	Solder	Crimp	Silver/Gold
	N-Male	Straight Plug	EZ-600-NMC-2	Hex	Spring Fit	Clamp	Silver/Gold
	N-Male	Straight Plug	TC-600-NMC	Hex	Solder	Clamp	Silver/Gold
	N-Male	Right Angle	TC-600-NMC-RA	Hex	Solder	Clamp	Silver/Gold
	N-Male	Right Angle	EZ-600-NMH-RA	Hex	Spring Fit	Crimp	Silver/Gold
	N-Male	Right Angle	TC-600-NMH-RA	Hex	Solder	Crimp	Silver/Gold
	N-Female	Straight Jack	EZ-600-NF	-	Spring Fit	Crimp	Silver/Gold
	N-Female	Bulkhead Jack	EZ-600-NF-BH	-	Spring Fit	Crimp	Silver/Gold
	N-Female	Bulkhead Jack	TC-600-NF-BH	-	Solder	Crimp	Silver/Gold
	N-Female	Bulkhead Jack	TC-600-NFC-BH	-	Solder	Clamp	Silver/Gold

4. N-TYPE CONNECTORS FOR VARIORS RADIO FREQUENCY SYSTEMS CABLES. Table 30 lists N-type connectors manufactured by Radio Frequency Systems. The information presented in Table 30 is provided for a convenient reference only. For detailed specification, refer to the manufacturer specifications.

TABLE 30. COMMON TRANSMISSION LINE CONNECTORS BY RADIO FREQUENCY SYSTEMS

Cable Type	Connectors					
	Description	Special Characteristics	Part Number	Inner Contact	Outer Contact	Finish (Body/Pin)
SCF14-50	N-Male	Shrinking Sleeve	NM-SCF14-001	Basket	Spring Finger	Silver/Silver
	N-Male, Right Angle	Shrinking Sleeve	NM-SCF14-045	Basket	Spring Finger	Silver/Gold
	BNC-Male	Shrinking Sleeve	BNCM-SCF14-040	Basket	Spring Finger	Silver/Gold
	N-Female, Bulkhead	O-Ring	NF-SCF14-005	Basket	Self Clamp	Silver/Gold
	N-Male	O-ring	NM-SCF14-003	Solder	Tab Flare	Brass/Silver
	N-Female	Shrinking Sleeve	NF-SCF14-001	Basket	Spring Finger	Silver/Silver
	N-Female	Shrinking Sleeve	NF-SCF14-035	Basket	Spring Finger	Silver/Gold
SCF38-50	N-Male	Shrinking Sleeve	NM-SCF38-001	Basket	Spring Finger	Silver/Silver
	N-Male	Threaded Gasket	NM-SCF38-075	Basket	Tab Flare	Silver/Gold
	N-Male, Right Angle	Shrinking Sleeve	NM-SCF38-047	Basket	Spring Finger	Silver/Gold
	N-Female	Shrinking Sleeve	NF-SCF38-002	Basket	Spring Finger	Silver/Gold
	N-Female	Shrinking Sleeve	NF-SCF38-001	Basket	Spring Finger	Silver/Silver
SCF12-50 SERIES	N-Male	Threaded Gasket	NM-SCF12-070	Basket	Spring Finger	Silver/Silver
	N-Male Right Angle	Threaded Gasket	NM-SCF12-071	Basket	Spring Finger	Silver/Gold
	N-Female	Threaded Gasket	NF-SCF12-070	Basket	Spring Finger	Silver/Silver
	N-Female	Shrinking Sleeve	NF-SCF12-002	Basket	Spring Finger	Silver/Gold