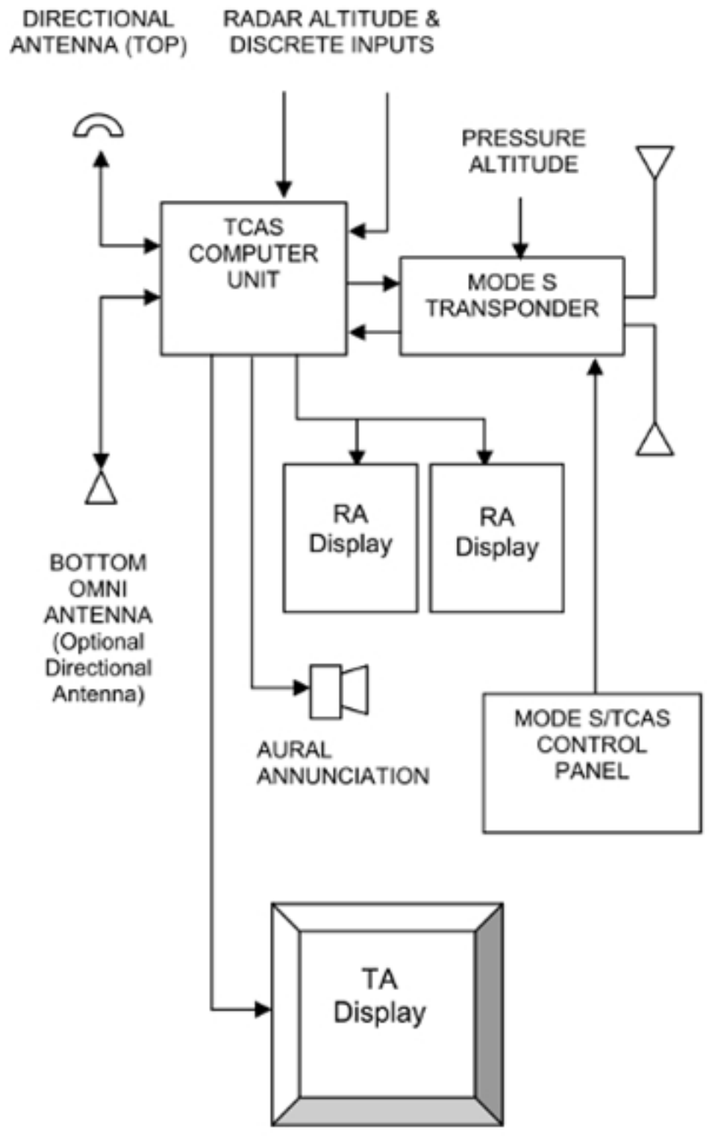
DIRECTIONAL ANTENNA (TOP)
RADAR ALTITUDE & DISCRETE INPUTS
PRESSURE ALTITUDE
TCAS COMPUTER UNIT
MODE S TRANSPONDER
RA Display
RA Display
BOTTOM OMNI ANTENNA (Optional Directional Antenna)
AURAL ANNUNCIATION
MODE S/TCAS CONTROL PANEL
TA Display

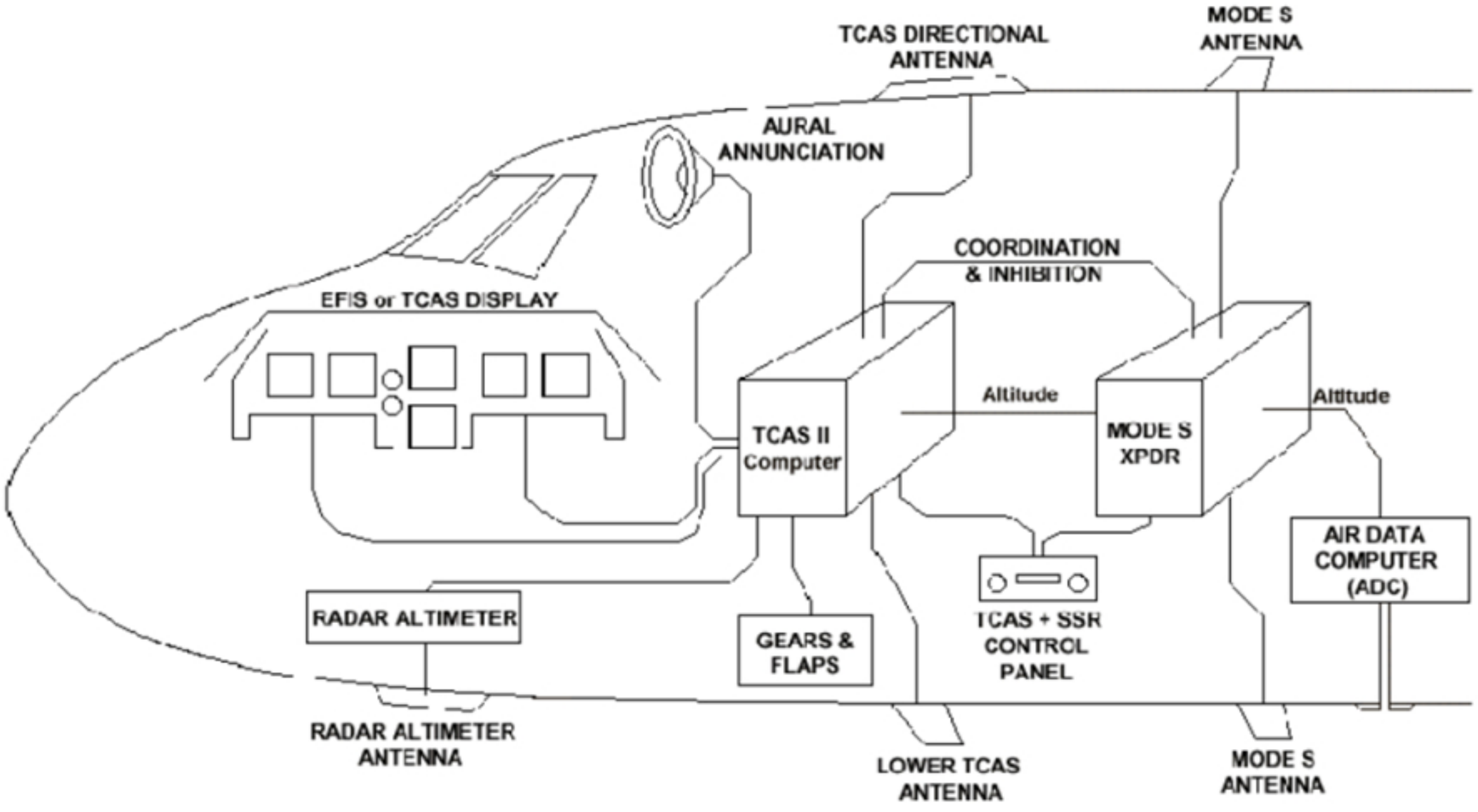
TCAS DIRECTIONAL ANTENNA
MODE S ANTENNA
AURAL ANNUNCIATION
COORDINATION & INHIBITION
EFIS or TCAS DISPLAY
TCAS II Computer
Altitude
MODE S XPDR
Altitude
AIR DATA COMPUTER (ADC)
TCAS + SSR CONTROL PANEL
RADAR ALTIMETER
GEARS & FLAPS
RADAR ALTIMETER ANTENNA
LOWER TCAS ANTENNA
MODE S ANTENNA