PB89-910404

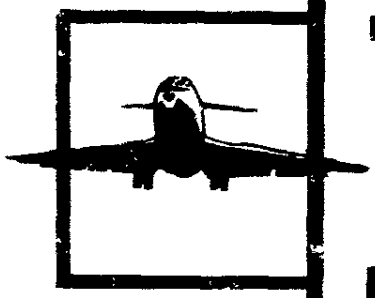

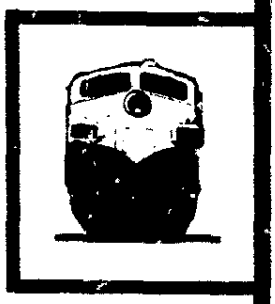

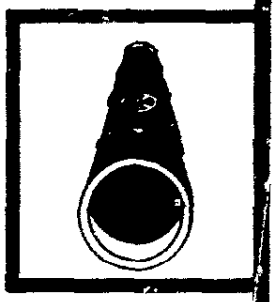

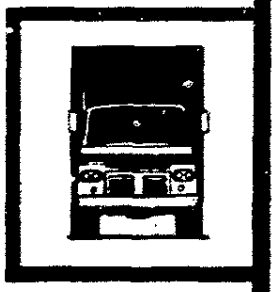

NATIONAL TRANSPORTATION SAFETY BOARD

WASHINGTON, D.C. 20594

AIRCRAFT ACCIDENT REPORT

ALOHA AIRLINES, FLIGHT 243
BOEING 737-200, N73711,
NEAR MAUI, HAWAII
APRIL 28, 1988

NTSB/AAR-89/03

UNITED STATES GOVERNMENT

TECHNICAL REPORT DOCUMENTATION PAGE

1. Report No. NTSB/AAR-89/03	2. Government Accession No. PB89-910404	3. Recipient's Catalog No.
4. Title and Subtitle Aircraft Accident Report--Aloha Airlines, Flight 243, Boeing 737-200, N73711, near Maui, Hawaii, April 28, 1988		5. Report Date June 14, 1989
		6. Performing Organization Code
7. Author(s)		8. Performing Organization Report No.
9. Performing Organization Name and Address National Transportation Safety Board Bureau of Accident Investigation Washington, D.C. 20594		10. Work Unit No. 4886A
		11. Contract or Grant No.
		13. Type of Report and Period Covered Aircraft Accident Report April 28, 1988
12. Sponsoring Agency Name and Address NATIONAL TRANSPORTATION SAFETY BOARD Washington, D.C. 20594		14. Sponsoring Agency Code

15. Supplementary Notes

16. Abstract: On April 28, 1988, at 1346, a Boeing 737-200, N73711, operated by Aloha Airlines Inc., as flight 243, experienced an explosive decompression and structural failure at 24,000 feet, while en route from Hilo, to Honolulu, Hawaii. Approximately 18 feet of the cabin skin and structure aft of the cabin entrance door and above the passenger floorline separated from the airplane during flight. There were 89 passengers and 6 crewmembers on board. One flight attendant was swept overboard during the decompression and is presumed to have been fatally injured; 7 passengers and 1 flight attendant received serious injuries. The flightcrew performed an emergency descent and landing at Kahului Airport on the Island of Maui.

The safety issues raised in this report include: the quality of air carrier maintenance programs and the FAA surveillance of those programs, the engineering airworthiness of the B-737 with particular emphasis on multiple site fatigue cracking of the fuselage lap joints, the human factors aspects of air carrier maintenance and inspection for the continuing airworthiness of transport category airplanes, to include repair procedures and the training, certification and qualification of mechanics and inspectors.

17. Key Words decompression; disbonding; fatigue cracking; corrosion; multiple site damage (MSD); FAA surveillance; maintenance program; nondestructive inspection		18. Distribution Statement This document is available to the public through the National Technical Information Service, Springfield, Virginia 22161	
19. Security Classification (of this report) UNCLASSIFIED	20. Security Classification (of this page) UNCLASSIFIED	21. No. of Pages 262	22. Price

NTSB Form 1765.2 (Rev. 5/88)

A

CONTENTS

	EXECUTIVE SUMMARY	v
1.	**FACTUAL INFORMATION**	
1.1	History of the Flight	1
1.2	Injuries to Persons	5
1.3	Damage to Airplane	5
1.3.1	General	5
1.3.2	Fuselage Separation Area	8
1.3.3	Additional Airplane Damage	10
1.3.4	Pressurization System	11
1.4	Other Damage	11
1.5	Personnel Information	11
1.6	Airplane Information	12
1.6.1	General	12
1.6.2	Lap Joint Design and Bonding History	13
1.6.3	Aloha Maintenance History	21
1.6.3.1	Maintenance Program	21
1.6.3.2	Maintenance Records Review	23
1.6.3.3	Service Bulletins	24
1.6.3.4	FAA Airworthiness Directive (AD) Compliance AD 87-21-08	25
1.7	Meteorological Information	26
1.8	Aids to Navigation	26
1.9	Communications	27
1.10	Aerodrome Information	27
1.11	Flight Recorders	27
1.12	Wreckage and Impact Information	27
1.13	Medical and Pathological Information	27
1.14	Fire	28
1.15	Survival Aspects	28
1.15.1	Supplemental Oxygen Systems	28
1.15.2	Sea Search	28
1.15.3	Rescue and Firefighting Response	29
1.15.4	Ambulance Response	29
1.16	Tests and Research	29
1.16.1	Pressurization System	29
1.16.2	Eddy Current and Visual Inspection	29
1.16.3	Materials Laboratory Examination	30
1.17	Additional Information	31
1.17.1	General Inspection of Other Aloha Airlines Airplanes	31
1.17.2	The B-737 Fail-Safe Design	34
1.17.3	In-Service Model Fuselage Tests	35
1.17.4	Service Difficulty Report Information	36
1.17.5	Supplemental Structural Inspection Program (SSIP)	36
1.17.6	FAA Surveillance of Aloha Airlines Maintenance	37
1.17.7	Boeing Commercial Airplanes Customer Visits	40
1.17.8	The National Aviation Safety Inspection Program	42
1.17.9	Subsequent FAA Action	45
2.	**ANALYSIS**	
2.1	General	47
2.2	Origin of Fuselage Separation	47
2.3	Fuselage Separation Sequence	50
2.4	Aloha Airlines Maintenance Program	51

2.4.1	Effectiveness of Inspections	53
2.4.2	Aloha Airlines Corrosion Control	58
2.4.3	Engineering Services	59
2.5	FAA Responsibilities	61
2.5.1	Issuance and Clarity of Airworthiness Directives	61
2.5.2	Needed Research on Corrosion Control and NDI	62
2.5.3	FAA Oversight	63
2.6	Boeing	67
2.6.1	Boeing 737 Certification	67
2.6.2	Boeing Structures Classification	68
2.6.3	Boeing Visits to Aloha Airlines	68
2.7	Operational Considerations	69
3.	**CONCLUSIONS**	
3.1	Findings	71
3.2	Probable Cause	73
4.	**RECOMMENDATIONS**	74
5.1	**APPENDIXES**	
	Appendix A--Investigation and Hearing	79
	Appendix B--Personnel Information	80
	Appendix C--Boeing Service Bulletin 737-53-1039, Rev. 2	82
	--FAA Airworthiness Directive 87-21-08	112
	--Boeing Service Bulletin 737-53A1039, Rev. 3	115
	--Boeing Nondestructive Test, 737-53-30-03	151
	Appendix D--Boeing Service Bulletin 737-53-1076	156
	Appendix E--Specialist's Factual Report of Investigation, CVR Flight Data Readout Report of Investigation	157
	Appendix F--Aloha Airlines Non-Destructive Testing Reports	191
	Appendix G--Summary of Previous Repairs on N73711	208
	Appendix H--SDR Summary	210
	Appendix I--Boeing MGOS Airlines Maintenance Evaluation	214
	Appendix J--FAA Report on Multiple Site Cracking, December 18, 1986	245

EXECUTIVE SUMMARY

On April 28, 1988, at 1346, a Boeing 737-200, N73711, operated by Aloha Airlines Inc., as flight 243, experienced an explosive decompression and structural failure at 24,000 feet, while en route from Hilo, to Honolulu, Hawaii. Approximately 18 feet from the cabin skin and structure aft of the cabin entrance door and above the passenger floorline separated from the airplane during flight. There were 89 passengers and 6 crewmembers on board. One flight attendant was swept overboard during the decompression and is presumed to have been fatally injured; 7 passengers and 1 flight attendant received serious injuries. The flight crew performed an emergency descent and landing at Kahului Airport on the Island of Maui.

The National Transportation Safety Board determines that the probable cause of this accident was the failure of the Aloha Airlines maintenance program to detect the presence of significant disbonding and fatigue damage which ultimately led to failure of the lap joint at S-10L and the separation of the fuselage upper lobe. Contributing to the accident were the failure of Aloha Airlines management to supervise properly its maintenance force; the failure of the FAA to evaluate properly the Aloha Airlines maintenace program and to assess the airline's inspection and quality control deficiencies; the failure of the FAA to require Airworthiness Directive 87-21-08 inspection of all the lap joints proposed by Boeing Alert Service Bulletin SB 737-53A1039; and the lack of a complete terminating action (neither generated by Boeing nor required by the FAA) after the discovery of early production difficulties in the B-737 cold bond lap joint which resulted in low bond durability, corrosion, and premature fatigue cracking.

The safety issues raised in this report include:

- The quality of air carrier maintenance programs and the FAA surveillance of those programs.
- The engineering design, certification, and continuing airworthiness of the B-737 with particular emphasis on multiple site fatigue cracking of the fuselage lap joints.
- The human factors aspects of air carrier maintenance and inspection for the continuing airworthiness of transport category airplanes, to include repair procedures and the training, certification and qualification of mechanics and inspectors.

Recommendations concerning these issues were addressed to the Federal Aviation Administration, Aloha Airlines, and the Air Transport Association.

NATIONAL TRANSPORTATION SAFETY BOARD
WASHINGTON, D.C. 20594

AIRCRAFT ACCIDENT REPORT

ALOHA AIRLINES, FLIGHT 243
BOEING 737-200, N73711,
NEAR MAUI, HAWAII
APRIL 28, 1988

1. FACTUAL INFORMATION

1.1 History of the Flight

On April 28, 1988, an Aloha Airlines Boeing 737, N73711, based at the Honolulu International Airport, Hawaii, was scheduled for a series of interisland flights to be conducted under Title 14 Code of Federal Regulations (CFR) Part 121. A captain and first officer were assigned for the first six flights of the day with a planned first officer change to complete the remainder of the daily schedule.

The first officer checked in with the dispatch office about 0500 Hawaiian standard time at the Aloha Airlines Operations Facility. After familiarizing himself with the flight operations paperwork, he proceeded to the Aloha Airlines parking apron and performed the preflight inspection required by company procedures before the first flight of the day. He stated that the airplane maintenance log release was signed and that there were no open discrepancies. He prepared the cockpit for the external portion of the preflight, exited the airplane in predawn darkness, and performed the visual exterior inspection on the lighted apron. He stated that he found nothing unusual and was satisfied that the airplane was ready for flight.

The captain checked in for duty about 0510; he completed his predeparture duties in the dispatch office and then proceeded to the airplane.

The crew flew three roundtrip flights, one each from Honolulu to Hilo, Maui, and Kauai. They reported that all six flights were uneventful and that all airplane systems performed in the normal and expected manner. Flightcrew visual exterior inspections between flights were not required by Federal Aviation Administration (FAA) accepted company procedures, and none were performed.

At 1100, a scheduled first officer change took place for the remainder of the day. The crew flew from Honolulu to Maui and then from Maui to Hilo. As with the previous flights of the day, no system, powerplant, or structural abnormalities were noted during these operations, and the flights were uneventful. Neither pilot left the airplane on arrival in Hilo, and the crew did not perform any visual exterior inspection nor were they required to do so.

At 1325, flight 243 departed Hilo Airport en route to Honolulu as part of the normal scheduled service. In addition to the two pilots, there were three flight attendants, an FAA air traffic controller, who was seated in the observer seat in the cockpit, and 89 passengers on board. Passenger boarding, engine start, taxi, and takeoff were uneventful.

The planned routing for Aloha flight 243 was from Hilo to Honolulu at flight level 240. Maui was listed as the alternate landing airport.

The first officer conducted the takeoff and en route climb from Hilo. The captain performed the nonflying pilot duties. The first officer did not recall using the autopilot.

The flight was conducted in visual meteorological conditions. There were no advisories for significant meteorological information (SIGMET) or airman's meteorological information (AIRMET) valid for the area along the planned route of flight.

No unusual occurrences were noted by either crewmember during the departure and climbout. As the airplane leveled at 24,000 feet, both pilots heard a loud "clap" or "whooshing" sound followed by a wind noise behind them. The first officer's head was jerked backward, and she stated that debris, including pieces of gray insulation, was floating in the cockpit. The captain observed that the cockpit entry door was missing and that "there was blue sky where the first-class ceiling had been." The captain immediately took over the controls of the airplane. He described the airplane attitude as rolling slightly left and right and that the flight controls felt "loose."

Because of the decompression, both pilots and the air traffic controller in the observer seat donned their oxygen masks. The captain began an emergency descent. He stated that he extended the speed brakes and descended at an indicated airspeed (IAS) of 280 to 290 knots. Because of ambient noise, the pilots initially used hand signals to communicate. The first officer stated that she observed a rate of descent of 4,100 feet per minute at some point during the emergency descent. The captain also stated that he actuated the passenger oxygen switch. The passenger oxygen manual tee handle was not actuated.

When the decompression occurred, all the passengers were seated and the seat belt sign was illuminated. The No. 1 flight attendant reportedly was standing at seat row 5. According to passenger observations, the flight attendant was immediately swept out of the cabin through a hole in the left side of the fuselage. The No. 2 flight attendant, standing by row 15/16, was thrown to the floor and sustained minor bruises. She was subsequently able to crawl up and down the aisle to render assistance and calm the passengers. The No. 3 flight attendant, standing at row 2, was struck in the head by debris and thrown to the floor. She suffered serious injuries including a concussion and severe head lacerations.

The first officer said she tuned the transponder to emergency code 7700 and attempted to notify Honolulu Air Route Traffic Control Center (ARTCC) that the flight was diverting to Maui. Because of the cockpit noise level, she could not hear any radio transmissions, and she was not sure if the Honolulu ARTCC heard the communication.

Although Honolulu ARTCC did not receive the first officer's initial communication, the controller working flight 243 observed an emergency code 7700 transponder return about 23 nautical miles (nmi) south-southeast of the Kahalui Airport, Maui. Starting at 1348:15, the controller attempted to communicate with the flight several times without success.

When the airplane descended through 14,000 feet, the first officer switched the radio to the Maui Tower frequency. At 1348:35, she informed the tower of the rapid decompression, declared an emergency, and stated the need for emergency equipment. Maui Tower acknowledged and began emergency notifications based on the first officer's report of decompression.

At the local controller's direction, the specialist working the Maui Tower clearance delivery position notified the airport's rescue and firefighting personnel, via the direct hot line, that a B-737 had declared an emergency, was inbound and that the nature of the emergency was a decompression. Rescue vehicles took up alert positions along the left side of the runway.

At the Maui Airport, ambulance service was available from the nearby community when notified by control tower personnel through the local "911" telephone number. Tower personnel did not consider it necessary at that time to call for an ambulance based on their understanding of the nature of the emergency.

At 1349:00, emergency coordination began between Honolulu Center and Maui Approach Control. Honolulu advised Maui Approach Control that they had received an emergency code 7700 transponder return that could be an Aloha 737 and stated, "You might be prepared in case he heads your way." Maui Approach Control then advised Honolulu Center that flight 243 was diverting to land at Maui.

The local controller instructed flight 243 to change to the Maui Sector transponder code to identify the flight and indicate to surrounding air traffic control (ATC) facilities that the flight was being handled by the Maui ATC facility. The first officer changed the transponder as requested.

The flight was operating beyond the local controller's area of radar authority of about 13 nmi. At 1350:58, the local controller requested the flight to switch to 119.5 MHz. (approach frequency) so that the approach controller could monitor the flight. Although the request was acknowledged, the flight was not heard on 119.5 MHz. Flight 243 continued to transmit on the local controller frequency.

At 1353:44, the first officer informed the local controller, "We're going to need assistance. We cannot communicate with the flight attendants. We'll need assistance for the passengers when we land." An ambulance request was not initiated as a result of this radio call. The first officer also provided the local controller with the flight's passenger count, but she did not indicate the fuel load. The local controller did not repeat the request for the fuel load even after a query from the chief of the emergency response team.

The captain stated that he began slowing the airplane as the flight approached 10,000 feet mean sea level (msl). This maneuver is required as a routine operations practice to comply with ATC speed limitations. He retracted the speed brakes, removed his oxygen mask, and began a gradual turn toward Maui's runway 02. At 210 knots IAS, the flightcrew could communicate verbally. The captain gave the command to lower the flaps. Initially flaps 1 were selected, then flaps 5. When attempting to extend beyond flaps 5, the airplane became less controllable, and the captain decided to return to flaps 5 for the landing.

Because the captain found the airplane becoming less controllable below 170 knots IAS, he elected to use 170 knots IAS for the approach and landing.

Using the public address (PA) system and on-board interphone, the first officer attempted to communicate with the flight attendants; however, there was no response.

At the command of the captain, the first officer lowered the landing gear at the normal point in the approach pattern. The main gear indicated down and locked; however, the nose gear position indicator light did not illuminate. Manual nose gear extension was selected and still the green indicator light did not illuminate; however, the red landing gear unsafe indicator light was not illuminated. After another manual attempt, the handle was placed down to complete the manual gear extension procedure. The captain said no attempt was made to use the nose gear downlock viewer because the center jumpseat was occupied and the captain believed it was urgent to land the airplane immediately.

At 1355:05, the first officer advised the tower, "We won't have a nose gear," and at 1356:14, the crew advised the tower, "We'll need all the equipment you've got."

While advancing the power levers to maneuver for the approach, the captain sensed a yawing motion and determined that the No. 1 (left) engine had failed. At 170 to 200 knots IAS, he placed the No. 1 engine start switch to the "flight" position in an attempt to start the engine; there was no response.

A normal descent profile was established 4 miles out on the final approach. The captain said that the airplane was "shaking a little, rocking slightly and felt springy."

Flight 243 landed on runway 02 at Maui's Kahului Airport at 1358:45. The captain said that he was able to make a normal touchdown and landing rollout. He used the No. 2 engine thrust reverser and brakes to stop the airplane. During the latter part of the rollout, the flaps were extended to 40° as required for an evacuation. An emergency evacuation was then accomplished on the runway.

After the accident, a passenger stated that as she was boarding the airplane through the jet bridge at Hilo, she observed a longitudinal fuselage crack. The crack was in the upper row of rivets along the S-10L lap joint, about halfway between the cabin door and the edge of the jet bridge hood. She made no mention of the observation to the airline ground personnel or flightcrew.

1.2 Injuries to Persons

Injuries	Crew	Passengers	Others	Total
Fatal	1*	0	0	1*
Serious	1	7	0	8
Minor	0	57	0	57
None	3	25	1**	29
Total	5	89	1	95

*Lost in flight; a sea search was unsuccessful.
**Air traffic controller seated in the observer seat in the cockpit.

1.3 Damage to Airplane

1.3.1 General

A major portion of the upper crown skin and structure of section 43 separated in flight causing an explosive decompression[1] of the cabin. (See figures 1 and 2.) The damaged area extended from slightly aft of the main cabin entrance door, rearward about 18 feet to the area just forward of the wings and from the left side of the cabin at the floor level to the right side window level.

The value of the airplane was estimated at about $5 million. As a result of the accident, the airplane was determined to be damaged beyond repair. It was dismantled on the site and sold for parts and scrap.

---

[1] "Explosive decompression" in this case indicates a violent expansion and noise from cabin air released under pressure rather than the effects of a chemical explosive device.

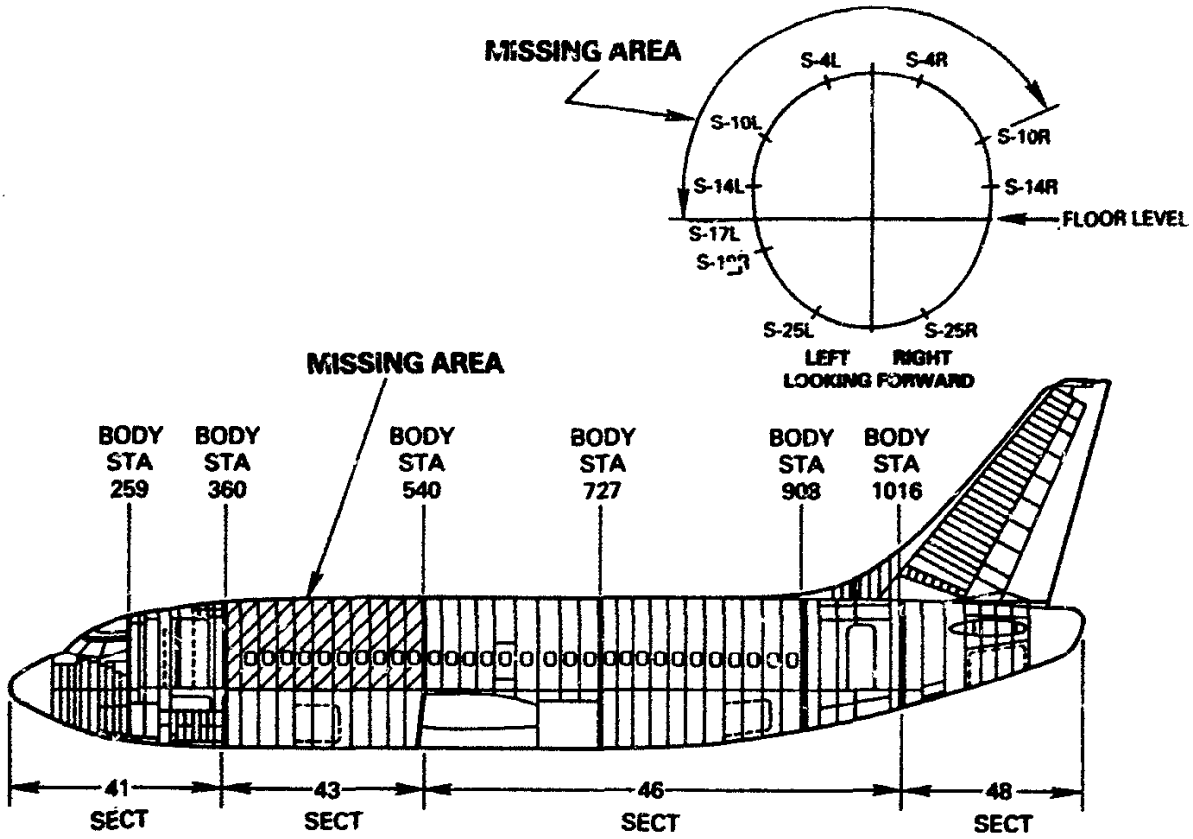

Figure 1.--Boeing 737-200--Body Stations, Stringers, and Section Locations.

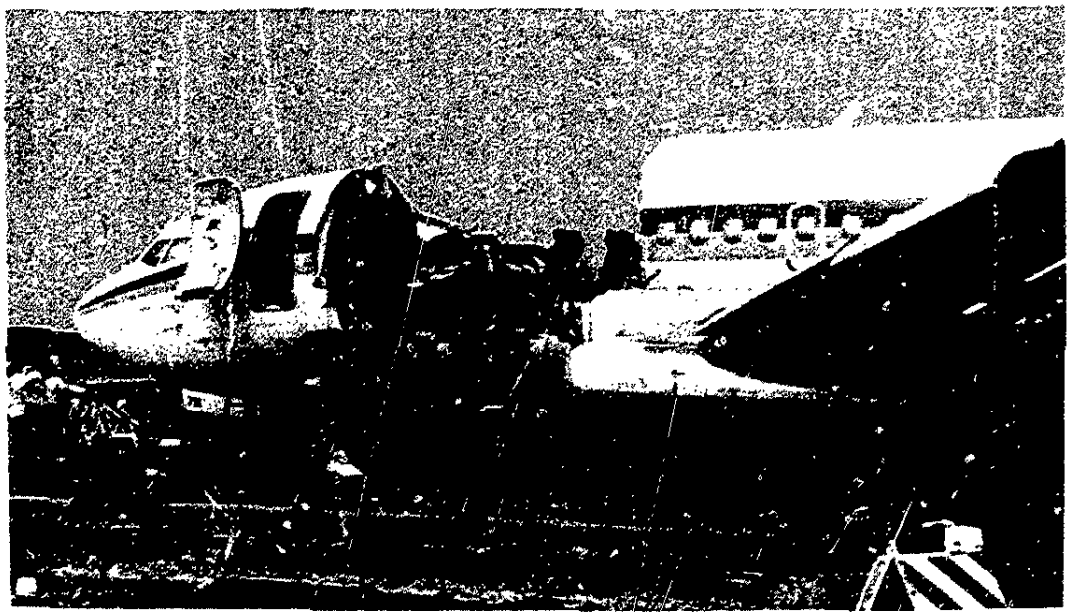

Figure 2a.--General view, left side of forward fuselage, N73711

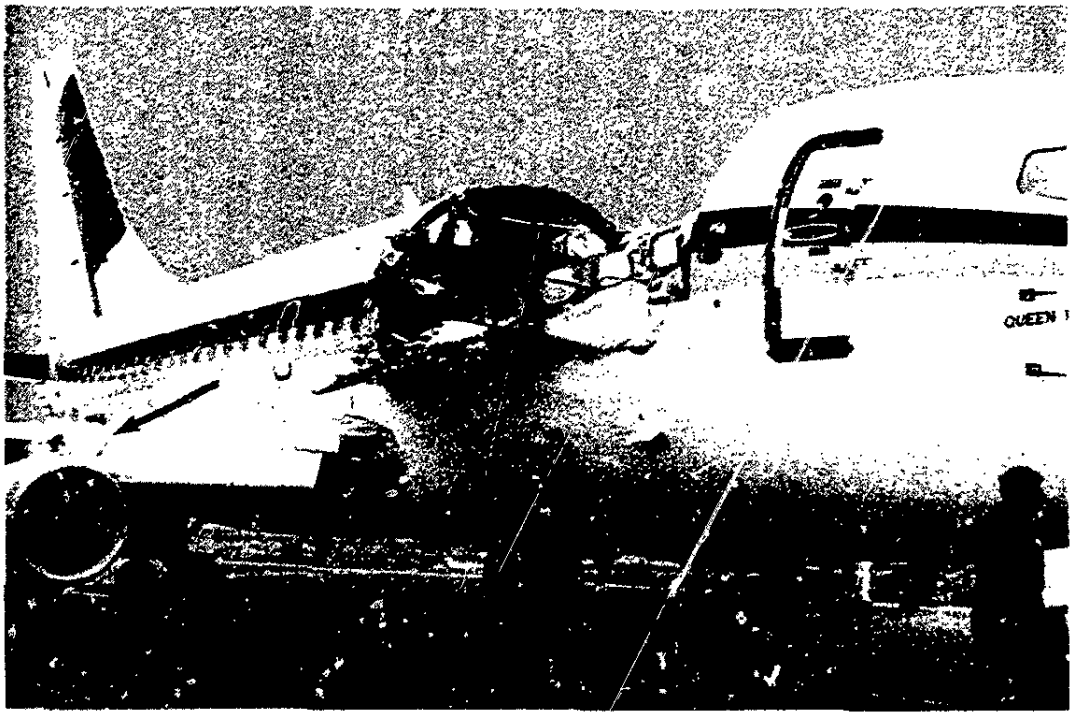

Figure 2b.--General view, right side of forward fuselage, N73711. Arrow marks fragments of S-4R lodged in the leading edge flap.

1.3.2 Fuselage Separation Area

The fuselage structure consists primarily of skin, frames,[2] and stringers.[3] Skin panels are joined longitudinally at lap joints where the sheet metal of the upper skin panel overlaps the sheet metal of the lower skin panel about 3 inches. When manufactured, this overlapped area was bonded and riveted with three rows of countersunk rivets. (See 1.6.2 Lap Joint Design and Bonding History.)

The area where the structure was missing extended from body station[4] (BS) 360 aft to about BS 540, and circumferentially from just above the floor on the left side of the airplane (at S-15L), across the crown and down the right side to a position above the window belt (at S-10R). The structure from the top of the window belt to the floor on the right side was distorted severely and bent outward more than 90°. The skin had peeled in this area leaving the frames, stringers, and window forgings in place. On the left side below the floor level, the skin had peeled off the structure in large V-shaped areas.

Five consecutive floor beams[5] at BS 420, 440, 460, 480, and 500 were broken all the way through. Also, the adjacent floor beams at BS 400 and 500A were cracked nearly all the way through. The fractures and cracks were slightly to the left of the airplane centerline. The frames at these same seven stations were broken on the left side just below the floor beams. Most of the center floor panels from BS 360 to BS 947 were displaced upward except in the overwing area. The right side cabin floor panels had not been displaced and little if any distress had occurred at the fastener locations for these panels. However, on the left side of the airplane between BS 400 and BS 500 along the inboard seat track, there was extensive floor panel displacement. The floor panels had displaced upward and had reached their maximum displacement of 4 inches at BS 440 (matching the displacement of the broken floor beams).

A fuselage section from BS 365 to BS 420 between S-4R and S-8R was trapped between the leading edge flap and inboard side of the right engine strut. This was the only significant piece of structure from the damaged

---

[2]Frames are the circumferential structural members of the fuselage.

[3]Stringers (S) are the longitudinal structural members of the fuselage. Stringers are identified by sequential numbers from the centerline of the top crown of the fuselage and by left (L) and right (R) letters as viewed forward from the rear of the airplane.

[4]Body station (BS) refers to a point along the fuselage measured longitudinally (in inches) from a zero reference point near the nose of the airplane.

[5]Floor beams are transverse structural support members for the floor, spaced 20 inches apart, running horizontally below the cabin floor at the S-77 level.

area that was recovered. The recovered piece contained two skin repairs along S-4R. This section and several samples cut from the remaining fuselage skin were submitted to the Safety Board's Materials Laboratory for further analysis. (See 1.16.3 Materials Laboratory Analysis.)

An examination of the remaining structure immediately surrounding the separation area, including skin, rivet, and stringer deformations, revealed the following failure patterns:

- Left side, BS 360 to 540--The skin was peeled from the structure in a down and aft direction.

- Right side, BS 360 to 540--The skin was peeled from the structure in a down and aft direction, changing to directly aft near BS 540.

- Circumferential break at BS 360--Fracture of the stringers and deformed rivets indicated that the separated structure was pulled generally aft except between S-5L and S-4R, where the direction was about 30° to the right of directly aft. Fractures and deformations showed that the separated skin had generally pulled through the butt joint rivets, except at several locations where the separation was in the butt splice strap.

- Circumferential break at BS 540, left side--From the top center of the fuselage to S-10L, the skin fracture transitioned from several inches forward of BS 540 to about 20 inches forward of BS 540 and was not associated with any rivet line. At the S-10L lap joint, the fracture followed the upper rivet line of the skin lap joint from a position 20 inches forward of BS 540 to a position about 6 inches forward of BS 540. There were indications of preexisting fatigue cracks associated with seven consecutive rivet holes along this portion of the rivet line. From S-10L to the floor line, the skin generally had separated several inches forward of station 540.

- Circumferential break at BS 540, right side--From the top center of the fuselage to S-10R the fractures in the stringers and deformed rivets indicated that the separated structure was pulled directly forward. In the vicinity of S-11R, a small area of structure had been pulled forward and up. Below S-11R, the skin had been torn but the departure direction was unclear.

Indications of preexisting cracks were found in the S-10L lap joint forward of BS 540, on each side of a rivet hole in the BS 360 butt strap near S-7R, and in lap joint rivet holes in a piece recovered from the right wing.

All other fractures adjacent to the separation area were typical of overstress separations.

The fracture surfaces and the immediate areas surrounding the separation perimeter generally were corrosion free. However, areas of corrosion and disbonded surfaces[6] were noted in the butt joints at BS 360 and 540. Additionally, some areas of bulged skin were noted on the intact skin lap joints and circumferential butt joints that remained with the airplane.

1.3.3 Additional Airplane Damage

There was minor impact damage on the leading edges of both wings, although the damage was more extensive on the right wing. In addition, both horizontal stabilizers and the lower portion of the vertical stabilizer had random dents in the leading edges.

The inlet cowls of both engines were dented, and several first stage fan blades of both engines were damaged. Remnants of fuselage structure were found against the inlet guide vanes and embedded in the acoustic liner of the right engine.

A cable in the closed loop cable system for the left engine thrust lever and a cable in the left engine start lever system were broken near a pulley cluster located in the leading edge of the left wing immediately inboard of the engine strut. The broken start lever cable prevented motion of the fuel control to the start position; the broken thrust lever cable prevented any power increase on the engine. The left engine fuel control was found in the "cutoff" position. Initial examination of the broken cables showed signs of heavy corrosion in the area of the separation. Routing of these cables between the cockpit and the left engine pod was traced through the area of maximum upward floor defection at BS 440 under the cabin floor. The cables were retained and submitted to the Safety Board's Materials Laboratory for further examination. (See 1.16.3 Materials Laboratory Analysis.)

The upper fuselage crown separation resulted in damage to overhead wire bundles, and a number of circuit breakers in the cockpit were tripped. Most of these circuit breakers were related to passenger service unit and lavatory wiring. The potable water line was leaking and its conduit was broken. The pitot line and the static line to the flight data recorder (FDR) were broken, as was the conditioned air distribution ducting. The passenger oxygen manifold was severed which prevented use of the passenger oxygen system; however, the flightcrew oxygen system was undamaged. The flightcrew and passenger oxygen cylinders were fully discharged. Both engine fire bottles were empty, and both of the engine fire extinguisher switches in the cockpit had been activated, per the airplane emergency evacuation procedures.

---

[6]Disbonded indicates the separation of previously joined (glued together) surfaces; in this case, aluminum fuselage skin panels.

The hydraulic system was not damaged. All the landing gear were down and locked, the flaps and leading edge devices were fully extended, the spoilers were retracted, and there was no loss of hydraulic fluid. An examination of the nose gear position indicator light module revealed that one of the two bulbs was burned out and that the module was slightly loose in its housing. No other discrepancies were found in the nose gear position indicating system.

1.3.4 Pressurization System

The main (aft) outflow valve and the forward outflow valve were fully closed. The forward outflow valve receives position signals from the main outflow valve. The pressurization controller was found in "automatic" and the flight/ground mode selector switch was found in the "flight" position. The flight position causes the cabin altitude controller to conform to the selected flight profile and also to modulate the main outflow valve toward the closed position to pressurize the cabin slightly (0.1 psi) during ground operation. The switch is normally set to flight after engine start to pressurize the airplane; the switch is set to "ground" to depressurize after the landing rollout.

Continuity checks showed normal system operation. All relevant system components were removed from the airplane for further functional tests. (See 1.16.1 Pressurization System.)

1.4 Other Damage

None.

1.5 Personnel Information

The flightcrew consisted of the captain, first officer, and three flight attendants. (See appendix B.)

The captain was hired by Aloha Airlines on May 31, 1977, as a B-737 first officer. He was upgraded to captain on June 1, 1987. He possessed a current first-class medical certificate with no limitations. He held an airline transport certificate with a type rating for the B-737. At the time of the accident, the captain had accrued about 8,500 total flight hours with 6,700 hours in the B-737. His pilot-in-command time with Aloha Airlines was 400 hours, all in the B-737.

The first officer was hired by Aloha Airlines on June 4, 1979, as a B-737 first officer. She possessed a current first-class medical certificate with a limitation for corrective lenses. She holds an airline transport certificate without type ratings. At the time of the accident, the first officer had accrued about 8,000 total flying hours with about 3,500 hours in the B-737.

A dispatch records review indicated that the crew had complied with all relevant flightcrew duty time limitations.

Flightcrew training records included documentation of normal and emergency procedures training. The Aloha Airlines flightcrew training program outline required emphasis on cockpit resource management (CRM) concepts; however, the training program did not include a specific CRM course, and line oriented flight training (LOFT) programs were not conducted, nor were they required by regulation.

1.6 Airplane Information

1.6.1 General

The accident airplane, N73711, a Boeing 737-297, serial number 20209, was manufactured in 1969 as production line number 152. It was equipped with two Pratt and Whitney JT8D-9A engines. The airplane was delivered on May 10, 1969, to Aloha Airlines, the original operator.

According to the limitations section of the FAA-approved Airplane Flight Manual for B-737, N73711, the maximum zero fuel weight is 88,000 pounds, the maximum certificated takeoff weight is 100,000 pounds. The actual weights for the departure on the accident flight were calculated at 80,253 pounds zero fuel weight and 93,133 pounds actual takeoff weight. The center of gravity (CG) computed for departure was 22 percent mean aerodynamic chord (MAC). The calculated CG limits for this gross weight were 4.0 percent and 30.5 percent MAC, respectively.

The Aloha Airlines fleet consisted of eleven airplanes, all B-737s. Four of the airplanes were considered high time, in excess of 60,000 cycles; one was the worldwide fleet leader.

At the time of the accident, the N73711 had accumulated 35,496 flight hours and 89,680 flight cycles (landings), the second highest number of cycles in the worldwide B-737 fleet. Due to the short distance between destinations on some Aloha Airlines routes, the maximum pressure differential of 7.5 psi was not reached on every flight. Therefore, the number of equivalent full pressurization cycles on the accident airplane is significantly less than the 89,680 cycles accumulated on the airplane.

A review of B-737 accidents and incidents reported to the Safety Board revealed one previous mishap involving N73711. On February 21, 1979, the airplane was operated into clear air turbulence that resulted in serious injury to two flight attendants. No record of any damage or required repair to the airplane was found.

There had been one previous accident involving in-flight structural failure of a B-737 fuselage. A Far Eastern Air Transport, Ltd. (FEAT) B-737-200, Republic of China registration B-2603, experienced an explosive

decompression and in-flight breakup on August 22, 1981.[7] The accident occurred near Sanyi, Miaoli, Taiwan, and was investigated by the Civil Aeronautics Administration (CAA) of the Ministry of Communications, Taiwan, Republic of China. The Safety Board, Boeing, and the FAA participated in the investigation. The Republic of China CAA determined that the probable cause of the accident was:

> extensive corrosion damage in the lower fuselage structures, and at a number of locations there were corrosion penetrated through pits, holes and cracks due to intergranular corrosion and skin thinning exfoliation corrosion, and in addition, the possible existence of undetected cracks because of the great number of pressurization cycles of the aircraft (a total of 33,313 landings), interaction of these defects and the damage had so deteriorated that rapid fracture occurred at a certain flight altitude and pressure differential resulting rapid decompression and sudden break of passenger compartment floor beams and connecting frames, cutting control cables and electrical wiring. And eventually loss of power, loss of control, midair disintegration.[8]

Questions arose during the Aloha Airlines accident investigation regarding certain information in the CAA report about cabin floor beam bending that suggested that the initial failure may have been in the upper lobe of the fuselage as opposed to the lower lobe as cited by the CAA. Testimony of Boeing and FAA experts at the Safety Board's public hearing (See appendix A.) on the Aloha Airlines accident revealed that the evidence cited in the CAA report was consistent with an initial failure in the lower lobe of the FEAT airplane.

A review of N73711's discrepancy logbook, the flight attendant cabin log, the line maintenance activity log, and the dispatch logs for the day of the accident revealed no significant entries prior to the accident.

1.6.2 Lap Joint Design and Bonding History

The B-737 fuselage is divided into four sections with sections 41, 43, and 46 comprising the majority of the pressure vessel. (See figure 1.) These sections, along with section 48, are butt joined at circumferential frames to form the entire fuselage. Section 43 forms the forward cabin area from BS 360 to BS 540, where the area of skin separation occurred. The sections are constructed of circumferential frames and longitudinal stringers that are covered by formed aluminum skin panels that are riveted to the

---

[7] Aircraft Accident Investigation Report (translation), Far Eastern Air Transport, LTD., Boeing 737-200, B-2603, August 22, 1981, Civil Aeronautics Administration, Ministry of Communications, Taipei, Taiwan, Republic of China.

[8] The wording of this probable cause has been excerpted, verbatim, from the translated copy of the official Aircraft Accident Investigation Report.

underlying structure. Each skin panel in the upper lobe of section 43 is the length of the entire section -- about 18 feet.

Adjacent skin panels are joined longitudinally by overlapping the edge of the upper panel about 3 inches over the edge of the lower panel. The overlap (joint) area is fastened with three rows of rivets and a bonding process. The center row of rivets secures the lap joint to a stringer underneath the skin, which, in turn, is attached to the circumferential frames by riveted clips. Below the window belt and in the lower lobe, the skin is connected to the frames between the stringers using riveted L-shaped brackets (shear ties). In section 43, the skin panel lap joints exist at S-4L and S-4R, S-10L and S-10R, and S-14L and S-14R in the upper lobe and at S-19L and S-19R and S-26L and S-26R in the lower lobe.

The upper lobe skin panels in section 43 are fabricated from two complete preformed sheets of 0.036-inch thick aluminum that are joined together using a "hot" bonding process. An acid etch is used to prepare the surfaces of the sheets before bonding. Since the epoxy hot bonding material is nonreactive at room temperature, the bond is cured at 250°F at 45 psi (hot-bond process). The inner sheet is then masked and the panel is milled chemically leaving the "waffle" doublers that provides circumferential tear straps at 10-inch intervals and a longitudinal double thickness at each stringer location.

On the early model airplanes (through production line number 291), the doubler sheet was milled away chemically at the lap joint locations; for production line number 292 and the subsequent numbers, the doubler sheet was retained on the outer panel of each lap joint to provide an extra 0.036 inch of material thickness in the joint. (See figures 3, 4a and 4b.) Additionally, for production line number 465 and the subsequent numbers, an improved bond surface pretreat process using a phosphoric acid anodize was employed.

For B-737 production line numbers 1 through 291, the fuselage skin lap joints were "cold" bonded. A cold-bonded process used an epoxy impregnated woven "scrim" cloth to join the longitudinal edges of the single thickness 0.036-inch skin panels together. In addition, the joint was mechanically assembled with three rows of countersunk rivets. The metal surfaces to be bonded were etched to ensure cleanliness and to prepare a suitable bonding surface. Since the epoxy "cold" bond material was reactive at room temperature, it was stored in rolls at dry ice temperature until shortly before its use. It was then allowed to warm to room temperature before installation. This bond cured at room temperature after assembly.

The cold bonding process was intended to provide structural efficiency and manufacturing cost advantages plus overall airplane weight reduction over traditionally riveted thick skin panels. Fuselage hoop loads (circumferential pressurization loads) were intended to be transferred through the bonded joint, rather than through the rivets, allowing the use of lighter, thinner fuselage skin panels with no degradation in fatigue life.

LINE NUMBER 1-291

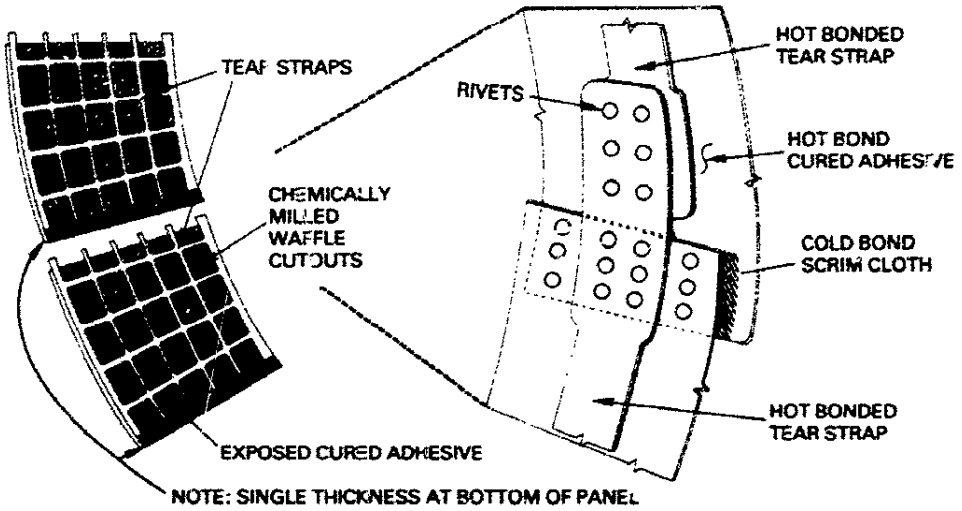

LINE NUMBER 292 & AFTER

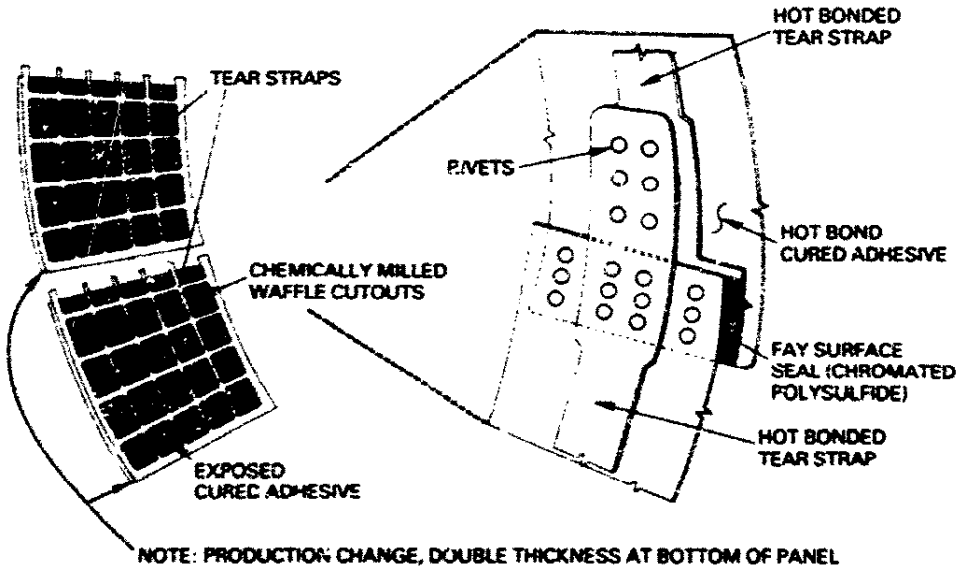

Figure 3.--B-737 Lap splice configuration

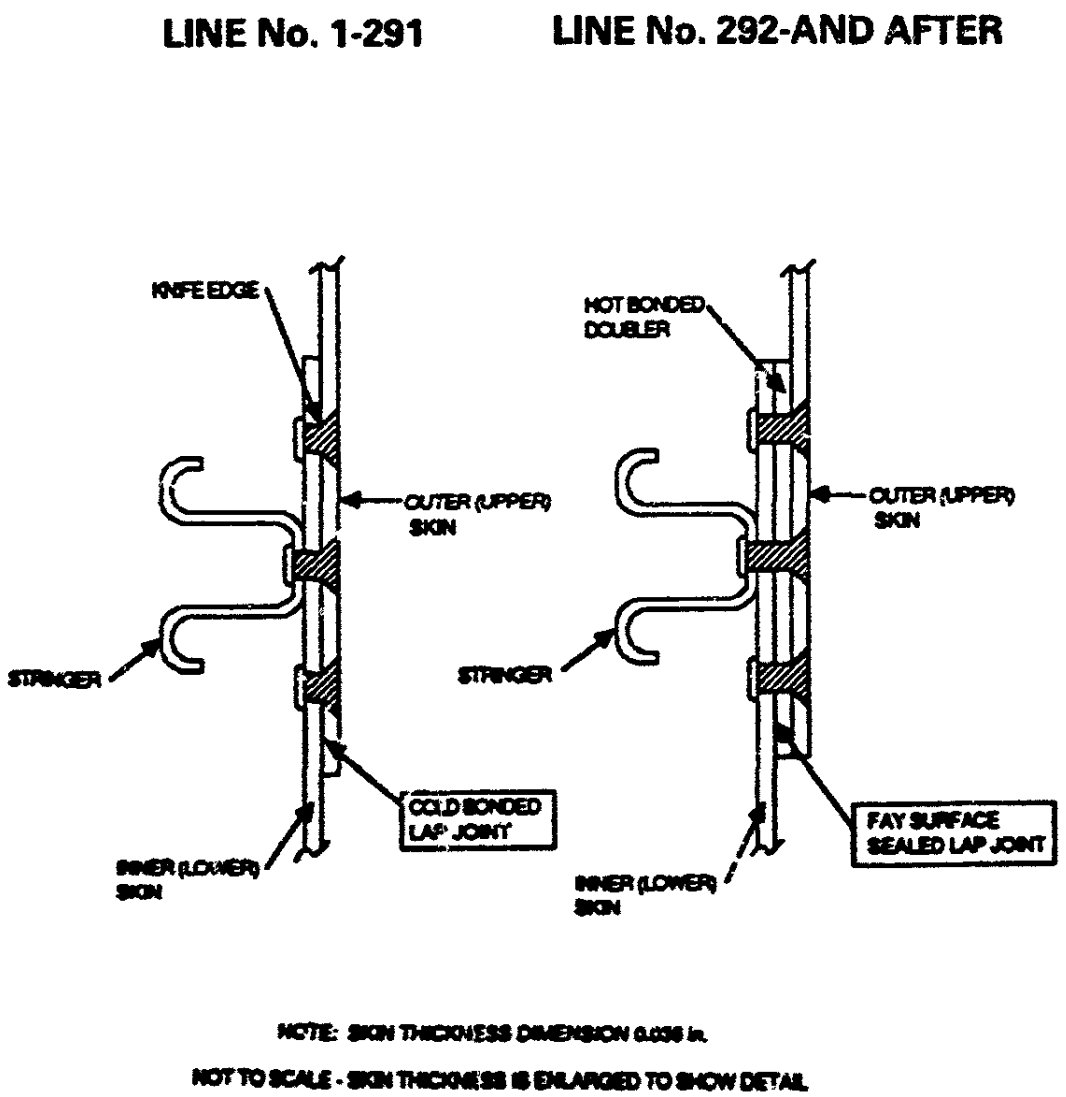

Figure 4a.--Lap joint section between tearstraps

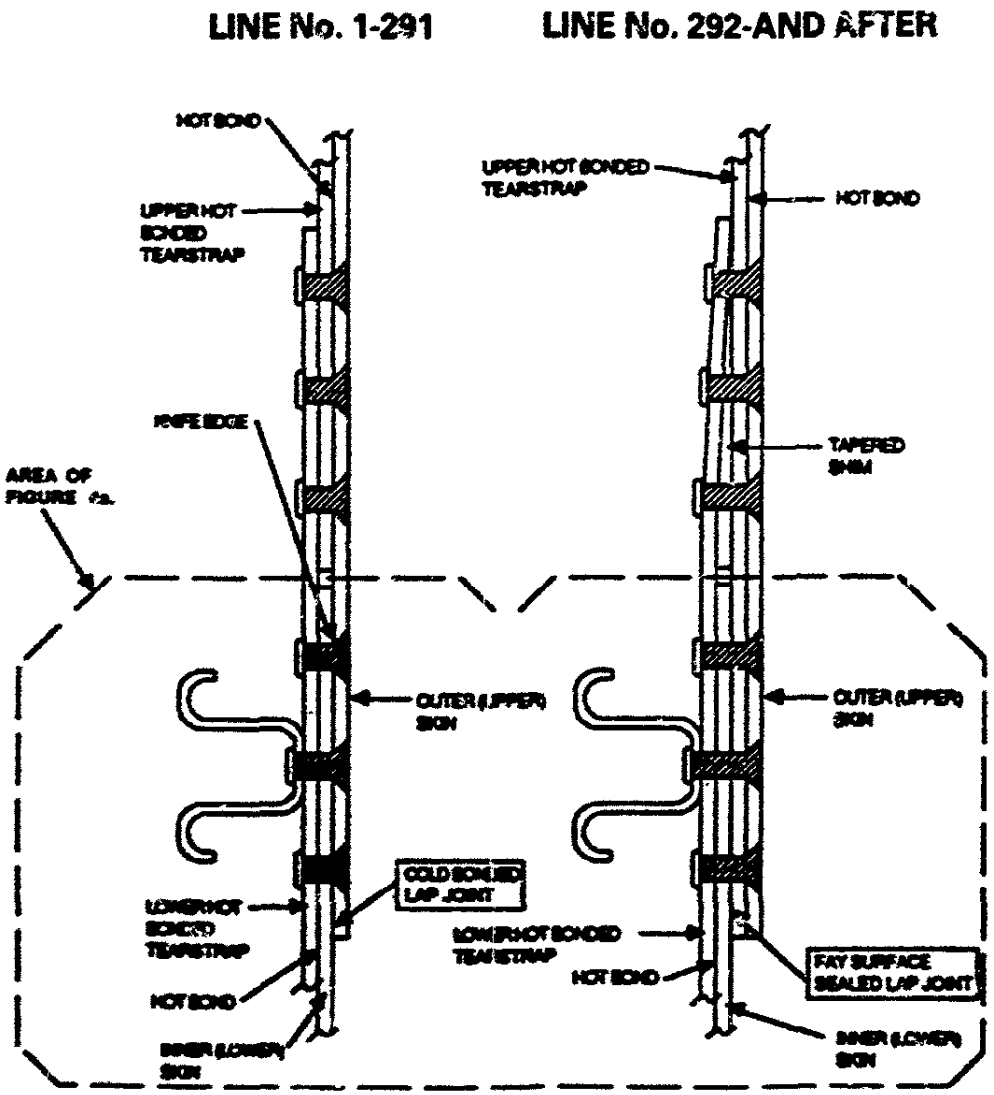

Figure 4b.--Lap joint section at tearstraps

Laboratory "coupon" tests[9] of the bonded joints, as well as the "quonset hut"[10] full scale fuselage section fatigue test were performed by the Boeing Company and were used to assess cold bond durability. According to Boeing, the results indicated that certification requirements were met.

The early service history of production B-737 airplanes with cold-bonded lap joints (plus B-727 and B-747 airplanes with the same construction technique) revealed that difficulties were encountered with this bonding process. It was found that the cleaning and etching process used on the skin panels had not provided a consistent quality thin surface oxide to be used as a bonding surface.

The service history compiled by Boeing has shown that bond quality can also be degraded if condensation is not removed from the scrim cloth before installation or if the scrim cloth sits at room temperature too long causing it to cure prematurely. According to Boeing engineers, these production process difficulties resulted in the random appearance of bonds with low environmental durability, with susceptiblity to corrosion, and with some areas of the lap joints that did not bond at all. Once in service, moisture could enter the joint in the areas of disbond, and corrosion could occur. The moisture and corrosion in some cases contributed to further disbonding of the joint because of the accumulation of oxides, water wicking in the joints, and the freeze-thaw cycles. The cold-bond lap joint production process on the B-737 was discontinued by the manufacturer in 1972. (See figure 5.) A redesigned smooth, close-fitting, "fay" surface sealed lap joint with increased joint thickness was introduced with B-737 production line number 292. This is a riveted joint with chromated polysulfide sealing compound, but it contains no bonding. Production of B-727 line number 850 and subsequent numbers and B-747 line number 201 and subsequent numbers also included fay surface sealed lap joints.

According to Boeing engineers, when disbond occurs in the bonded lap joint, as designed for the B-737, the hoop load transfer through the joint is borne by the three rows of countersunk rivets that mechanically fasten the skin panels together. Because of the single thickness skin surface that was facilitated by the bonded construction, the countersink for the flush rivet heads extended through the entire thickness of the outer 0.036-inch sheet. A knife edge was created at the bottom of the hole which concentrated stresses. These stresses were cyclic with pressurization loads, and fatigue cracking ultimately occurred at the site.

In a cylindrical fuselage like the B-737, the circumferential pressurization stresses are twice as large as the longitudinal stresses. As fatigue effects take place, cracks propagate longitudinally, perpendicular to the dominant pressurization (hoop) loads. In the B-737, fatigue cracking

---

[9]"Coupon" describes small sections of skin simulating the joint configuration.

[10]"Quonset hut" refers to a full scale 1/2 section of fuselage containing both the upper and lower lobe.

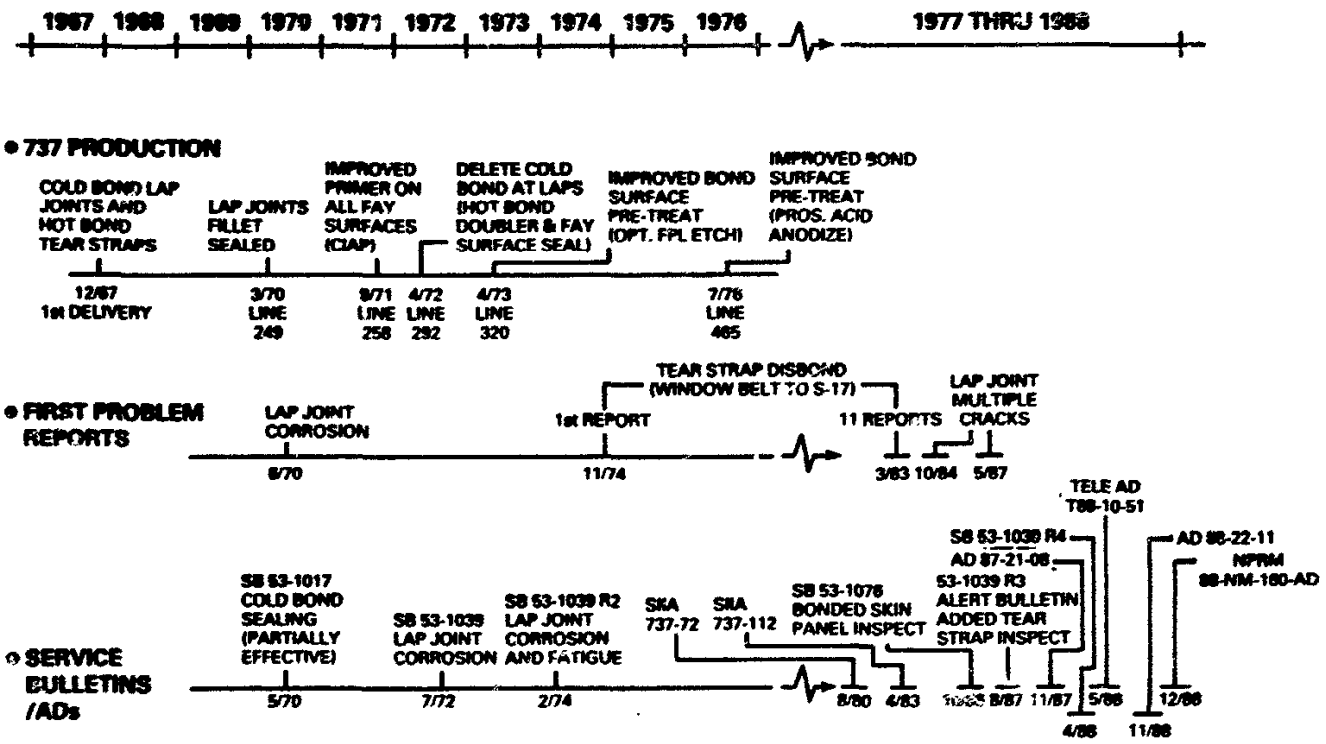

Figure 5.--Production, first problem reports, and Service Bulletins/ADs for 737 bonded body skin lap joints and tear straps

initially is expected to occur in the outer layer of skin along the lap joint because the outer layer contains a knife edge at each of the countersunk rivet holes. Furthermore, the fatigue cracking primarily is found in the upper row of the outer skin panel lap joint rivet holes because this area carries the greatest stress. For the underlying skin of the lap joint, the area of greatest stress is through the lower row of lap joint rivet holes. However, since the rivet holes in this skin panel are not countersunk, fatigue cracking is not as likely to initiate at this location.

Random cracking at lap joints (See Section 1.17.4, Service Difficulty Report Information) on individual B-737 airplanes has occurred over time, related to the original quality of the joint bond and the environment in which the airplane operated. The rate of crack propagation has been dependent on, among other things, the degree of disbond at the given location within the joint and the accumulation by the airplane of equivalent full pressurization cycles.

During the service history of the B-737, Boeing issued several service bulletins (SBs) pertaining to corrosion detection and repair on fuselage skin panels, lap joint corrosion, disbond and repair, and lap joint fatigue cracking inspection. The earliest of these was SB 737-53-1017 dated May 13, 1970, "Sealing Of Cold Bonded Structure For Corrosion Protection." Two years later, the information was moved to the Structural Repair Manual and the SB was deleted on July 20, 1972. As a follow-up, SB 737-53-1039 was issued on July 19, 1972, and initially addressed the area of lap joint corrosion and repair on the first 291 airplanes produced. This SB received a minor revision in October 1972. A revision/reissue in February 1974 reported lap joint disbond and corrosion on 30 airplanes and stated "in most instances these areas could be positively identified only after corrosion caused exterior skin bulges, cracks or missing fastener heads," and "prolonged operation with large areas of delamination (disbonding) will eventually result in fatigue cracking." The SB program outlined "the minimum requirements for maintaining the structural integrity of the lap joints." Corrosion and fatigue inspection details and intervals and repair instructions were presented. Operator compliance was not made mandatory by the FAA.

On August 20, 1987, the subject SB was elevated to "Alert" status with Revision 3. The following was reason for the upgraded status:

> Since the release of Revision 2 an operator has reported multiple fatigue cracks on three airplanes which have accumulated 40,400/42,800 flight hours and 44,700/49,900 flight cycles. Cracks were located in the upper skin at stringer four (S-4), left and right, S-10 right and S-14 right, between Body Stations 360 and 907.
>
> Therefore, Revision 3 was issued to up-grade this service bulletin to an "ALERT" status and to revise the repeat inspection thresholds for detecting fatigue cracking of the outer skin panel at the lap joint upper row of fasteners.

Part I of SB 1039 Revision 3 dealt with "Corrosion Inspection" and Part II addressed "Fatigue Damage and Repair." The subject areas were lap joints at S-4, S-10, S-14, S-19, S-20, and S-24. Part III covered "Tear Strap Inspection and Repair" in the same structural areas as Part II.

The FAA issued an Airworthiness Directive (AD) 87-21-08 effective November 2, 1987, which stated in part:

> To prevent rapid depressurization as a result of failure of certain fuselage lap splices, accomplish the following: .... (instructions followed)

The AD made the inspection for fatigue cracking referenced in SB 737-53A1039 Revision 3 mandatory for S-4L and R (note only S-4L and R) on production line numbers 1 through 291, before the accumulation of 30,000 landings or within the next 250 landings after the effective date of the AD. Repairs for cracks found were to be accomplished in accordance with instructions contained in the referenced Boeing SB. (The AD and SB revisions 2 and 3, with nondestructive testing (NDT) instructions, are included as appendix C.)

An additional SB 737-53-1076 dated October 30, 1986, deals with skin bonding problems. (A summary of SB 737-53-1076 is included as appendix D.)

Boeing issued revision 4 to SB 737-53A1039 dated April 14, 1988, to permit an interim repair when cracks were detected and time was not available for complete restoration per the previous instructions. This information was not relevant to the accident.

1.6.3 Aloha Maintenance History

1.6.3.1 Maintenance Program

Airplanes operated by Aloha Airlines are maintained under an FAA-approved Continuous Airworthiness Maintenance Program as required by 14 CFR Part 121, Subpart L. The maintenance, based on guidance provided in the Boeing Maintenance Planning Document (MPD) (Document number D6-17594), recommended that aircraft maintenance inspections be divided into four series of checks with specific recurring frequency. The checks are referred to as follows:

- A Check--Primary inspection to disclose general condition
- B Check--Intermediate check to determine general condition
- C Check--System and component check, airworthiness evaluation
- D Check--Structural inspection, determine airworthiness

A Boeing study of early MPD documents revealed overlap between C and D check items. Revision A of the MPD in 1974 redistributed task items to other appropriate check intervals and the D check terminology was eliminated. However, no maintenance items were deleted and many airlines, including Aloha, continued with the original terminology.

Table 1.--Frequency of Inspection.
(by flight hours)

Check	Boeing Recommendation	Industry Average (1987)	Aloha Schedule
A	125	150	175
B	750	650	750
C	3,000	3,000	3,000
D	20,000	21,000	15,000

The Aloha Airlines work schedule for D checks initially was prepared in 1972. The tasks from the Boeing MPD were organized into 52 increments (blocks) to be accomplished during the D check interval. The C check tasks were organized into four increments and integrated with the B check schedule of work. B, C, and D checks were actually combined and accomplished in overnight segments.

Aloha Airlines was participating in the Supplemental Structural Inspection Program (SSIP) for Large Transport Airplanes in accordance with FAA Advisory Circular (AC) 91-56 dated May 6, 1981. The SSIP is a continuous structural inspection to identify cracks, corrosion, and other damage. While the program is not a substitute for the operator's existing FAA-approved structural inspection program, the SSIP and the Supplemental Structural Inspection Document (SSID)[11] provide the operator with procedures to evaluate and supplement their existing program. The SSID provides for the inspection of Significant Structural Items (SSI) that have damage or fatigue characteristics that could affect the airplane's structural integrity. Should cracking occur, the examination of SSIs allows operators to detect fatigue damage before the airplane's residual strength falls below the regulatory fail-safe requirements. (See 1.17.5 Supplemental Structural Inspection Program.)

Though not related to airplane fuselage skin in section 43, the review of the maintenance records found several SSID items for which no maintenance entry could be found. These SSID items were F-20, F-22B, F-24B, F-29A, and F-29B which pertained to the inspection of bulkheads and door or hatch frames. Aloha Airlines personnel reported that these inspections had been incorporated into its letter check maintenance program. However, the

---

[11] Boeing, with assistance from the operating airlines, developed and presented to the FAA, programs to extend the operating life of older airplanes and to ensure the continued safe operation of those airplanes. The FAA issued AD 84-21-06 effective November 1984 to place the program in effect for the B-737.

Component Historical Record card for these inspections showed no such maintenance entries to indicate that the inspections had actually been accomplished.

1.6.3.2 Maintenance Records Review

To review N73711's most recent complete cycle of A, B, C, and D checks, the Safety Board examined airplane records from May 15, 1980, to April 28, 1988. Aloha Airlines aircraft utilization was such that 8 years of flight activity was necessary to accumulate the 15,000 hours which constitute the D check inspection interval. There are eight structural inspection blocks (portions of the complete D check) that require the removal of airplane interior components. These inspection blocks were proposed by the airline and approved by the local FAA principal maintenance inspector (PMI) to be accomplished sequentially, one block at a time. A one-time heavy maintenance hanger visit for a D check was not scheduled. A complete interior removal at any one time was not required nor was it accomplished.

The maintenance records review indicated that the previous cycles of A, B, C, and D checks were recorded as accomplished within the prescribed intervals. The most recent scheduled maintenance checks were: A--April 25, 1988; B--March 31, 1988; C-4--March 31, 1988; D (block 5)--June 22, 1987, (This block called for inspection of fuselage skin and framing around windshields and windows.); and D (block 8)--February 20, 1981, (This block called for inspection of fuselage skin and stringer splices at BS 320 and a general inspection of the fuselage at BS 400 and BS 520 areas).

The D check structural inspection included an FAA-approved 1/4 sampling program. This meant that certain blocks of the D check were accomplished on 1/4 of the airplanes in the Aloha 10-airplane fleet at the normal 15,000-hour interval, and if no adverse findings were encountered, another 1/4 of the fleet was inspected at 30,000 hours. Again, with no adverse findings, another 1/4 was to be inspected at 45,000 hours, etc.

The Boeing MPD states,

> Should an operator encounter an adverse finding, the following actions are recommended: (1) Inspect remaining aircraft in his fleet at the earliest opportunity, (2) Evaluate findings from these inspections together with data from Boeing on the inspection time or area, (3) Determine if a change in frequency of the time interval and/or the fraction needs to be accomplished and then make the change in the program.

There were no adverse findings recorded in any of the records reviewed; therefore, there were no changes in the frequency of inspection or the fraction related to the sampling program.

After the accident, the Safety Board conducted visual inspections of the exterior of the airplanes in the Aloha Airlines B-737 fleet. Considerable evidence of corrosion on the fuselage of the airplanes in the

fleet was seen. Swelling and bulging of the skin (pillowing), dished fastener heads, pulled and popped rivets, and blistering, scaling, and flaking paint were present at many sites along the lap joints of almost every airplane.

Aloha Airlines did not produce evidence that it had in place specific severe operating environment corrosion detection and corrosion control programs employing the techniques outlined in the Boeing Commercial Jet Corrosion Prevention Manual (Boeing Document D6-41910). Program requirements in the manual include extensive application of water displacing corrosion inhibiting compounds, reapplication at fastener locations and panel edges of exterior fuselage skin every 6 months and internal treatment at 2-year intervals, washing the aircraft at 15-day intervals, plus regular buffing and brightening of the unpainted surfaces. Aloha Airlines maintenance D check instructions for structural inspection addressed corrosion with an introductory note. This notation defined the inspection as a rigorous visual examination for condition (damage, cracks, galling, scratches, wear, corrosion, rust, evidence of overheating, rubbing, or age) without further definition. Aloha Airlines inspectors and quality control personnel stated that the corrosion was corrected when detected during normal inspection and maintenance activities as part of their normal task card activity.

The Safety Board subcategorized and evaluated all pressurization discrepancies recorded from 1980 to 1988 to determine adverse trends or significant anomalies. This maintenance historical review produced no evidence of prior structural overstress incidents for N73711 as a result of pressurization or other malfunction.

1.6.3.3 Service Bulletins

Boeing periodically issued information via SBs to inform operators of reported or anticipated difficulties with various airplane models. The following communications were relevant to the B-737 fuselage structure, including section 43:

- Structural Item Interim Advisories (SIIA)
- Service Bulletins (SB)
- Service Letters (SL)
- In-Service Activity Reports (ISAR)
- Significant Service Items (SSI)

Nine SBs provided guidance for maintenance or information otherwise applicable to section 43. Of these nine SBs, entries referring to the following five SBs were found in the Aloha Airlines fleet maintenance records:

SB 737-53-1017	Sealing of Cold Bonded Splices
SB 737-53A1027	Cargo Compartment Body Frames
SB 737-53A1039	Skin Lap Joint Inspection
SB 737-53A1042	Lower Lobe Skins
SB 737-53A1064	Frames Stations 351 and 360

fleet was seen. Swelling and bulging of the skin (pillowing), dished fastener heads, pulled and popped rivets, and blistering, scaling, and flaking paint were present at many sites along the lap joints of almost every airplane.

Aloha Airlines did not produce evidence that it had in place specific severe operating environment corrosion detection and corrosion control programs employing the techniques outlined in the Boeing Commercial Jet Corrosion Prevention Manual (Boeing Document D6-41910). Program requirements in the manual include extensive application of water displacing corrosion inhibiting compounds, reapplication at fastener locations and panel edges of exterior fuselage skin every 6 months and internal treatment at 2-year intervals, washing the aircraft at 15-day intervals, plus regular buffing and brightening of the unpainted surfaces. Aloha Airlines maintenance D check instructions for structural inspection addressed corrosion with an introductory note. This notation defined the inspection as a rigorous visual examination for condition (damage, cracks, galling, scratches, wear, corrosion, rust, evidence of overheating, rubbing, or age) without further definition. Aloha Airlines inspectors and quality control personnel stated that the corrosion was corrected when detected during normal inspection and maintenance activities as part of their normal task card activity.

The Safety Board subcategorized and evaluated all pressurization discrepancies recorded from 1980 to 1988 to determine adverse trends or significant anomalies. This maintenance historical review produced no evidence of prior structural overstress incidents for N73711 as a result of pressurization or other malfunction.

1.6.3.3 Service Bulletins

Boeing periodically issued information via SBs to inform operators of reported or anticipated difficulties with various airplane models. The following communications were relevant to the B-737 fuselage structure, including section 43:

- Structural Item Interim Advisories (SIIA)
- Service Bulletins (SB)
- Service Letters (SL)
- In-Service Activity Reports (ISAR)
- Significant Service Items (SSI)

Nine SBs provided guidance for maintenance or information otherwise applicable to section 43. Of these nine SBs, entries referring to the following five SBs were found in the Aloha Airlines fleet maintenance records:

SB 737-53-1017	Sealing of Cold Bonded Splices
SB 737-53A1027	Cargo Compartment Body Frames
SB 737-53A1039	Skin Lap Joint Inspection
SB 737-53A1042	Lower Lobe Skins
SB 737-53A1064	Frames Stations 351 and 360

Due to the method of entering the SBs in the Aloha Airlines maintenance records, the recurring nature of inspections could not be determined. Also, entries for the following four SBs were not located in the records:

SB 737-53-1076 Fuselage-Bonded Skin Panel Inspection and Repair

SB 737-53-1078 Fuselage Window Belt Skin Panel Inspection and Repair

SB 737-53-1085 Fuselage Stringer to Frame Tie Clips Inspection and Replacement

SB 737-53-1089 Fuselage Skin Crack At Stringer 17 Inspection and Preventive Modifications

Aloha Airlines personnel stated that the information contained in these particular SBs had been incorporated into Aloha Airlines letter check inspection system; however, specific documentation of this fact was not produced.

1.6.3.4 FAA Airworthiness Directive (AD) Compliance AD 87-21-08

Airworthiness Directive (AD) 87-21-08, which became effective on November 2, 1987, was issued "to prevent rapid depressurization as a result of failure of certain fuselage lap splices...." The AD required operators to perform a "close visual inspection"[12] of S-4L and R, and if cracks were found, operators were required to perform an eddy current inspection[13] of the skin around the upper row of lap joint rivets for the full length of the panel. Compliance with the AD was required before the accumulation of 30,000 landings or within 250 landings after the effective date, whichever occurred later. The AD was based on Boeing Alert Service Bulletin (ASB) 737-53A1039, Revision 3, dated August 20, 1987. The ASB required an inspection of the skin around the upper row of rivets along the lap joints at S-4, -10, -14, -19, -20, and -24 left and right. An FAA employee testified at the public hearing that the decision to limit the scope of the mandatory inspection was based on analysis of statistical information available to them and the recognition of the scope of work required.

A review of the maintenance discrepancy logs found that two repairs to cracks on the S-4R lap joint on N73711 were accomplished on November 12, 1987. The small separated section of upper fuselage recovered after the

---

[12] The Safety Board was unable to locate an industry definition of a "close visual inspection."

[13] An eddy current inspection is a nondestructive test (NDT) method in which an induced electrical eddy current is generated in the test object. A material deviation such as a crack or difference in skin thickness causes the eddy current to change and allows the anomaly to be detected.

Due to the method of entering the SBs in the Aloha Airlines maintenance records, the recurring nature of inspections could not be determined. Also, entries for the following four SBs were not located in the records:

SB 737-53-1076 Fuselage-Bonded Skin Panel Inspection and Repair

SB 737-53-1078 Fuselage Window Belt Skin Panel Inspection and Repair

SB 737-53-1085 Fuselage Stringer to Frame Tie Clips Inspection and Replacement

SB 737-53-1089 Fuselage Skin Crack At Stringer 17 Inspection and Preventive Modifications

Aloha Airlines personnel stated that the information contained in these particular SBs had been incorporated into Aloha Airlines letter check inspection system; however, specific documentation of this fact was not produced.

1.6.3.4 FAA Airworthiness Directive (AD) Compliance AD 87-21-08

Airworthiness Directive (AD) 87-21-08, which became effective on November 2, 1987, was issued "to prevent rapid depressurization as a result of failure of certain fuselage lap splices...." The AD required operators to perform a "close visual inspection"[12] of S-4L and R, and if cracks were found, operators were required to perform an eddy current inspection[13] of the skin around the upper row of lap joint rivets for the full length of the panel. Compliance with the AD was required before the accumulation of 30,000 landings or within 250 landings after the effective date, whichever occurred later. The AD was based on Boeing Alert Service Bulletin (ASB) 737-53A1039, Revision 3, dated August 20, 1987. The ASB required an inspection of the skin around the upper row of rivets along the lap joints at S-4, -10, -14, -19, -20, and -24 left and right. An FAA employee testified at the public hearing that the decision to limit the scope of the mandatory inspection was based on analysis of statistical information available to them and the recognition of the scope of work required.

A review of the maintenance discrepancy logs found that two repairs to cracks on the S-4R lap joint on N73711 were accomplished on November 12, 1987. The small separated section of upper fuselage recovered after the

---

[12] The Safety Board was unable to locate an industry definition of a "close visual inspection."

[13] An eddy current inspection is a nondestructive test (NDT) method in which an induced electrical eddy current is generated in the test object. A material deviation such as a crack or difference in skin thickness causes the eddy current to change and allows the anomaly to be detected.

accident contained both of the repaired areas. The maintenance log for N73711 indicated that a visual inspection had been accomplished in accordance with AD 87-21-08; however, the record contained no evidence that the required eddy current inspection had been accomplished.

An Aloha Airlines inspector testified at the public hearing that it was company practice to perform an eddy current confirmation inspection whenever a crack was detected visually. Both the Aloha Airlines director of quality control and the staff vice president for quality assurance and engineering stated that a Nondestructive Testing Report (Form No. M-86) should be filled out by the inspector when any NDT inspection is performed. The form is then used by management for tracking purposes. A search of the records for N73711 failed to find a copy of an NDT inspection report of the S-4R lap joint.

The inspector who performed the initial AD inspection on N73711 stated that he did not believe that documenting the eddy current inspection was necessary or required. During the investigation, Aloha Airlines did not produce a written maintenance policy regarding the requirement for the entry of an eddy current inspection in the maintenance log. However, a broad examination of maintenance records revealed that other inspectors had made such entries during this same time period.

Two inspectors working on separate shifts conducted the inspection required by AD 87-21-08 on the accident airplane. They followed guidance in the AD and the related SB (SB-737-53A1039) which were taken to the work site. The first inspector started on November 12, 1987, and visually detected the cracks on S-4L. This inspector stated that after visually detecting the cracks, he performed an eddy current inspection of the lap joint upper rivet holes along the length of the panel (BS 360 to BS 540) and found no additional cracks.

After maintenance personnel accomplished two sheet metal repairs, the first inspector inspected the work and signed the log book. The second inspector stated that he performed a complete visual inspection of the airplane, including the area inspected by the first inspector and the two repaired areas, and he signed off the completion of the AD in the maintenance log on November 14, 1987. The related inspections on the lap joints at S-10, -14, -19, -20, and -24, which were recommended by SB 737-53A1039 but not by the AD, were not accomplished. At the time of the AD inspection and repair, N73711 had accumulated 87,056 cycles. The accident occurred at 89,680 cycles.

1.7 Meteorological Information

The accident occurred in day visual meteorological conditions. There was no significant adverse weather experienced.

1.8 Aids to Navigation

Not relevant to this accident.

1.9 Communications

There were radio communications difficulties between flight 243 and ATC shortly after the explosive decompression. At 280 to 290 knots IAS and with a part of the forward cabin structure and the cockpit door missing, high noise levels impeded air/ground communications briefly. There were no other communication anomalies.

1.10 Aerodrome Information

After the explosive decompression, the airplane proceeded to the nearest suitable landing field, Kahului Airport, a 14 CFR Part 139 certificated Index D airport on the island of Maui, Hawaii. The only instrument runway, 02/20, is 6,995 feet long, 150 feet wide, and constructed of asphalt with a grooved surface.

1.11 Flight Recorders

The airplane was equipped with a Fairchild model 5424 foil type analog FDR, S/N 7274, and a Collins model 642C-1 cockpit voice recorder (CVR), S/N 54. After the accident, the recorders were removed from the airplane and sent to the Safety Board's Flight Recorder Laboratory in Washington, D.C. for examination and readout of pertinent data. (See appendix E.)

Examination of the FDR recorded traces indicated that the flight was normal from liftoff to the accident. The airspeed trace abruptly ceased at the time of the accident and dropped to a position below zero KIAS. The other recorder parameters appeared to operate normally. Peak vertical acceleration (G) excursions recorded as a result of the accident were -0.48 and +2.95. These peak values were not sustained.

The CVR revealed normal communications before the decompression. Following the decompression, loud wind noise from the opening in the fuselage prevented normal cockpit conversations. Hand signals were used to communicate. When the airspeed and related wind noise had been reduced to a level where conversations were intelligible, the flightcrew discontinued using the oxygen masks. Cockpit conversations then continued to be recorded in the normal manner.

1.12 Wreckage and Impact Information

The extensive air and surface search of the ocean failed to locate the portions of the airplane lost during the explosive decompression.

1.13 Medical and Pathological Information

The flight attendant who was ejected from the fuselage was not found and she is assumed to have been fatally injured in the accident.

Two passengers who were seated in the first class cabin in seats 2A and 2C were struck by debris and wiring which resulted in multiple

lacerations and electrical shock burns to the face and hands. Passengers seated in seats 4A and 4F (window seats) sustained serious injuries including cerebral concussions and multiple lacerations to their heads and faces. Passengers seated in 4B, C, D, and E (center and aisle seats) sustained multiple lacerations and were treated and released on the day of the accident.

Passengers seated in rows 5, 6, and 7 also sustained cerebral concussions and multiple lacerations. An 84-year-old female passenger seated in 5A was the most seriously injured with a skull fracture, lacerations and a skeletal system fracture. The passenger seated in 6A sustained a broken right arm, multiple facial lacerations, and blood effusion in both ears.

The majority of the passengers seated in rows 8 through 21 received minor injuries including lacerations, abrasions, and barotrauma. They were treated and released on the day of the accident. Twenty-five passengers reported no injuries and continued to their destinations that same evening. There were no reported injuries as a result of using the emergency evacuation slides.

1.14 Fire

There was no fire.

1.15 Survival Aspects

This was a survivable accident; the fatality was the result of the explosive nature of the decompression. The flight attendant was swept violently from the airplane and passed through an opening of jagged metal. There were blood stains on seat cushions at seat 5A on the left side of cabin near BS 500 and on the exterior left side of the fuselage where the flight attendant was standing when the decompression occurred. Passengers who observed her during the explosive decompression stated that they saw the flight attendant pulled upward and toward the left side of the cabin at seat row 5.

1.15.1 Supplemental Oxygen Systems

The flightcrew and the cockpit observer seat occupant used the airplane-installed crew oxygen system. Postaccident inspection showed that both the crew and the passenger oxygen bottles that were located in the forward cargo compartment had zero quantity and pressure. The passenger oxygen distribution manifolds were part of the material lost during the structural separation, and thus, there was no supply of oxygen to the first-class and coach cabins.

1.15.2 Sea Search

At 1430, the FAA notified the U.S. Coast Guard that an Aloha Airlines B-737 was diverting to Maui airport due to an "inflight explosion." A Coast Guard helicopter, airborne on a training mission, was assigned to search the area for debris and the flight attendant. The Coast Guard cutter

CAPE CORWIN was also directed into the search area as was a Marine Corps helicopter. A full search effort by ships, helicopters, and fixed-wing aircraft continued for 3 days without success.

1.15.3 Rescue and Firefighting Response

The Maui Airport fire department responded with five emergency vehicles. After the ambulatory passengers had evacuated the airplane via slides and the aft airstair, fire department personnel entered the airplane and assisted the injured still on board. All occupants were removed from the airplane in 25 minutes.

1.15.4 Ambulance Response

The flightcrew initially communicated the nature of the emergency as a "rapid decompression." The full nature of the structural damage was not verbalized. ATC notified rescue and firefighting personnel, but did not immediately call for ambulance assistance. A subsequent call from the flightcrew at 1353, "We'll need assistance for the passengers when we land," was confirmed by ATC personnel. Police dispatcher records indicated the "Medic I" ambulance was notified at 1358, about the time of touchdown. A reason for the notification delay was not determined. The first ambulance arrived at the scene at 1405 and radioed for assistance. Other ambulance vehicles arrived at 1411.

1.16 Tests and Research

1.16.1 Pressurization System

All of the pressurization system wiring from the selector panel to the pressure controller to the outflow valve was examined. No discrepancies were found. Additionally, a visual examination of the components including the outflow valve, both relief valves, the controller, and the selector panel did not reveal any discrepancies. These components were removed from the airplane after the accident and subjected to standard acceptance test procedures for new units. There were no significant anomalies discovered.

1.16.2 Eddy Current and Visual Inspection

An Aloha Airlines inspector under supervision of the Safety Board conducted postaccident eddy current inspections on selected portions of the remaining fuselage lap joints to determine the extent of fatigue cracking of the skin along the top row of rivets (the area of highest stress). The inspected areas included the left and right lap joints at S-4, -10, and -14 from BS 540 to BS 1016.

Initially, the skin around 53 rivets exhibited crack indications along S-4L and S-4R, some visually detectable by paint cracks. To make the rivet heads more discernible, the paint was sanded off and the skin was reinspected. Twenty-eight of the original 53 indications were confirmed cracks. Stripping of the paint layers was not attempted. (It is not normal

Aloha Airlines or industry practice to remove paint by sanding.) Two samples of the lap joint were cut from S-4L between BS 727 and 747 and between BS 847 and 867 for further examination.

The eddy current inspection along S-10 and S-14 revealed 17 cracks along S-10L and 2 cracks along S-14R. There were no cracks along S-10R or S-14L. No attempt was made to strip the paint layers. (Appendix F provides details of these inspections.)

There were 25 locations where previous fuselage skin repairs or rework had been performed. Most of these areas consisted of external doubler patches at various stringer and frame locations. In several areas, countersunk rivets had been replaced with universal buttonhead rivets in lap joints, mostly in the lower lobe. (Appendix G provides a description of the repairs or reworked areas and their locations.)

1.16.3 Materials Laboratory Examination

Selected pieces of the fuselage skin and associated structures were returned to the Safety Board's Materials Laboratory for analysis. These pieces included lap joint samples (S-4R, S-4L and S-10L) and a section of a circumferential butt joint strap.

The lap joint sample, S-4R between BS 360 and BS 420 (found wedged in the right wing area), contained two external doubler patches. The patches were removed to examine the holes for evidence of cracks. There was extensive fatigue cracking in the upper row rivet holes both under and between the patches. The examination found one of the longest cracks on the airplane, 0.27 inch, in this piece. This stringer section (S-4R) contained three areas where the tear straps are riveted above the primary lap joint. There was extensive fatigue cracking present in all three locations. Also, the entire cold-bonded lap joint had become disbonded. There was light to moderate corrosion with severe corrosion (unrepairable depletion of metal) in some areas. Nearly all of the hot-bonded tear straps were disbonded in the vicinity of the lap joint.

The lap joint samples, S-4L from BS 727 to BS 747 and from BS 847 to BS 867, each contained 18 columns of lap joint rivets. The laboratory examination revealed fatigue cracking in the skin adjacent to nearly every hole in the upper rivet row with the larger crack lengths located in the mid-bay areas (half way between two adjacent circumferential tear straps). A comparison of the final results of the postaccident on-scene eddy current inspection conducted by Aloha Airlines technicians and the Safety Board laboratory findings revealed that the on-scene eddy current inspection only successfully identified cracks larger than 0.08 inch. The laboratory examination found five cracks that measured 0.08 inch (+/-.005). The postaccident inspection had identified only one of these five cracks. This crack-length inspection threshold of 0.08 inch varies from the Boeing NDT Manual which states, "This inspection can find cracks 0.040 or longer beneath the countersunk fastener heads...."

The lap joint piece, S-4L, from BS 519 to BS 536, exhibited fatigue cracking from 16 consecutive rivet holes along the upper row of lap joint rivets. The largest single fatigue crack in one direction measured 0.18 inch from the knife edge of the countersink. (See figure 6.) The longest total combined crack length in both directions across a rivet hole (end to end of the crack including the hole) measured 0.53 inch. Both the cold-bonded lap joint and the hot-bonded tear straps in this area had disbonded. Light to moderate corrosion was present on the previously bonded surfaces.

At the request of the Safety Board, Boeing performed a striation count on several of the larger fatigue cracks from the skin along S-4R and S-10L to determine age and crack propagation rate. Although data could not be obtained from all the cracks examined, Table 2 provides the estimated number of cycles of crack growth found on the seven crack samples that provided suitable data.

Table 2.--Striation counts on selected cracks from the lap joints along S-4R and S-10L

Specimen location	Estimated number of cycles (+/-20%)	Crack length in inches
S-4R	28,670	0.105
S-4R	37,148	0.130
S-4R	28,656	0.142
S-4R	26,449	0.154
S-4R	24,056	0.110
S-10L	23,628	0.161
S-10L	36,379	0.145

An examination of the butt strap section from BS 360 at S-7R revealed circumferentially propagating fatigue cracks from both sides of a rivet hole just forward of the joint line. The fatigue regions extended 0.09 inch above the rivet hole and 0.03 inch below the rivet hole.

The separated ends of the No. 1 engine control cables were also examined for condition and failure mode. The separation areas of the No. 1 engine control cables were cleaned and examined. Each break exhibited corrosion; only a few of the individual wires were relatively unaffected. Many of the strands exhibited corrosion damage through most of the wire diameter.

1.17 Additional Information

1.17.1 General Inspection of Other Aloha Airlines Airplanes

The Safety Board reviewed 2-year maintenance records of three other high-cycle B-737s operated by Aloha Airlines--N73712, N73713, and N73717. All of the required A, B, C, and D checks had been signed off at the appropriate intervals. The supplemental structural inspections were accounted for with the exception of SSID items pertaining to bulkheads and

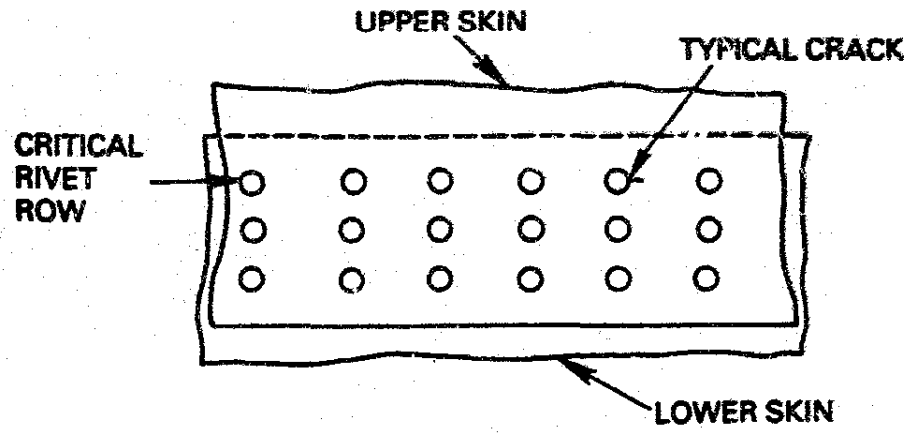

Figure 6a.--Typical lap joint

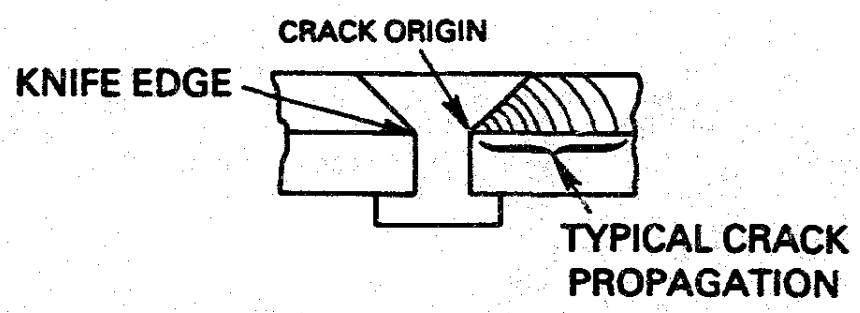

Figure 6b.--Cross section of a rivet and skin

door or hatch frames which also were not addressed in the Component Historical Record cards of the accident airplane. The same SBs that had been applicable to the maintenance of N73711 were applied to the three airplanes.

In accordance with AD 87-21-08, N73712 had been inspected on November 5, 1987. At the time of the inspection, the airplane had accumulated 32,642 hours and 87,551 cycles. No defects were reported during that inspection. On April 9, 1988, with an accumulated 33,676 hours and 90,051 cycles, the airplane was hangared for heavy maintenance. It was the highest cycle B-737 in the world fleet. Following the N73711 accident, the N73712 airplane received a thorough corrosion/fatigue inspection and evaluation of the structure. It was determined that the airplane was beyond economical repair. It was dismantled on the site and sold for parts and scrap.

On April 14, 1988, N73713 had accumulated 32,026 hours and 85,409 cycles and received its last A check. No discrepancies were noted during that inspection. The inspection required by AD 87-21-08 had been accomplished on December 15, 1987, at 83,488 cycles. In 1984, Aloha Airlines submitted a Service Difficulty Report (SDR) to report a 7 1/2-inch crack on this airplane. The crack was located along the top row of rivets along the lap joint at S-10R. The discrepancy log entry referred to SB 737-53-1039. Following the N73711 accident, N73713 received a thorough corrosion/fatigue inspection and evaluation of the structure which indicated that this airplane was also beyond economical repair. The airplane also was dismantled on the site and sold for parts and scrap.

On April 27, 1988, N73717 had accumulated 39,986 hours and 68,954 cycles and received its last A check. No discrepancies were noted during that inspection. The inspection required by AD 87-21-08 was accomplished on January 12, 1988, at 67,429 cycles. The MIB maintenance form stated that both a visual and an eddy current inspection had been accomplished. The entry showed that the fuselage crown from S-4R to S-4L had been repaired at station BS 540. Also, corrosion of the forward section of the skin joint on the left side from S-9L to S-4L resulted in repairs.

After the N73711 accident, N73717 remained parked for almost 6 months awaiting final disposition. It was then flown on a ferry permit to an independent aircraft overhaul facility for refurbishment. During initial inspection after paint stripping, fatigue cracking was found visually at multiple rivet locations on the S-14R lap joint at BS 380 and numerous tearstrap disbonds and skin corrosion sites were apparent. All outstanding SB actions and terminating (permanent) repairs for the ADs pertaining to the structure were accomplished. The airplane was out of service for about 1 year.

1.17.2 The B-737 Fail-Safe Design

Boeing designed the B-737 for an "economic service life"[14] of 20 years and to include 51,000 flight hours and 75,000 cycles. At the time the B-737 was certificated in 1967, Federal Air Regulations required that the airplane's structure be capable of sustaining 80 percent of limit load[15] with any complete or obvious partial failure of any single structural element. However, the B-737 was designed to sustain full-limit load to account for dynamic effects. The fail-safe design criteria for the B-737 established by the manufacturer required that the fuselage be able to withstand a 40-inch crack without suffering catastrophic failure. These criteria were derived from an estimate of the maximum external damage expected to occur to the fuselage as a result of external damage that might occur from the penetration of projectiles produced by an uncontained engine failure. There was no consideration given to the joining of adjacent cracks which might develop during extended service other than normal "state-of-the-art" fatigue evaluation. Boeing design included the placement of tear straps with 10-inch spacing in the fuselage skin in both directions (longitudinal and circumferential) to redirect running cracks from external damage in a direction perpendicular to the crack. The fail-safe concept was based upon the theory that the redirection of a progressing crack would cause the fuselage skin to "flap" open, releasing internal pressure in a controlled manner without adversely affecting the residual strength of the fuselage as a whole.

Supporting the skin are circumferentially oriented frames spaced 20 inches apart and longitudinally oriented stringers located 10 inches apart. Each area bounded between adjacent frames and stringers (20 inches by 10 inches) is considered a frame bay. The fail-safe design requirement was to allow for failure within two frame bays without compromising the structural integrity of the fuselage.

Boeing demonstrated the ability of the fuselage to fail safely within two frame bays during certification of the airplane by "guillotine" tests on a fuselage half section. The guillotine tests involved two 15-inch blades located nearly side by side which were used to penetrate longitudinally the test fuselage section within two adjacent frame bays while it was under full pressure. The guillotines produced an instantaneous 40-inch separation in the fuselage skin with a break in the center tear strap. As anticipated by the design, the separation redirected itself circumferentially, produced a flap, and resulted in a controlled decompression. Similar results were obtained when the guillotine test was oriented circumferentially.

---

[14] Boeing's definition for "economic service life" requires the airplane to attain these values (51,000 flight hours and 75,000 cycles) without structural fatigue cracking which would cause significant operator maintenance expense.

[15] "Limit load" is the maximum flight load expected in service.

During the certification program for the B-737, some of the knowledge gained on the B-727 full-scale certification testing was used by Boeing to validate fatigue performance on the B-737. Skin thickness of the B-737 (0.036 inch) was slightly less than that of the B-727 (0.040 inch). However, fatigue testing of a complete B-737 was not accomplished as it was on the B-727. That is, the complete B-727 fuselage was cycled for 60,000 cycles (one economic design life goal) during certification whereas the B-737 fuselage design concept was demonstrated by fatigue testing a representative crown-to-keel half section of the fuselage. The test section for the B-737, or "quonset hut," was cycled 150,000 times to full pressurization differential (two times the 75,000-cycle economic design life goal). No fatigue cracks developed on the test section and no disbonding occurred. These test results were used to verify the B-737 fatigue life expectations.

There was no consideration given in the fatigue evaluation to the possibility of disbonding or the effects of corrosion on the strength of the fuselage lap joints.

1.17.3 In-Service Model Fuselage Tests

In 1986, Boeing acquired a B-737 that had been involved in an in-service accident. At the Safety Board public hearing, Boeing personnel stated that the airplane was purchased for two reasons:

> to conduct a thorough teardown of the airplane from nose to stern, from wing tip to wing tip, fuselage, wing, empennage; and also to run some damage tolerance testing of the aft fuselage, since the aft body was in good condition, to verify some areas we wanted to understand further about pressure bulkheads.

The fuselage, line No. 90, was acquired with just over 59,000 actual flight cycles. Lap joint and tear strap bonds were inspected and found to be in good condition. Boeing then applied over 70,000 additional test cycles. The first skin cracks (seven) located around BS 780 were discovered in August 1987 by NDT at 79,000 cycles. In September 1987, at 89,000 cycles, there were about 15 cracks detected in a 20-inch bay area around BS 820. The cracks ranged from about 0.37 inch to 0.67 inch tip to tip. At this point, Boeing engineers placed additional straps on the test article at BS 760 and BS 820. At the Safety Board public hearing, Boeing indicated this step was taken to preserve the test article in the event of a catastrophic failure. Boeing further indicated that the added straps would not alter the results of the fatigue testing.

When additional cycles were applied, individual cracks joined to form a large crack that grew to about 32 inches at 100,000 cycles. Testing continued to 100,673 cycles; when the crack reached almost 40 inches, the skin flapped and controlled pressure release occurred. During the latter portion of the testing, the structure and skin yielded (deformed), and the crack gap remained open with interior insulation material visible after each full pressurization cycle.

1.17.4 Service Difficulty Report Information

The FAA SDR data base was queried by the Safety Board after the accident for information pertaining to the B-737 fuselage. From the beginning of the current data base (January 1983) until the date of the accident, 1,352 records were found. Of these, 198 were reports of fuselage skin cracks, and 10 of these reports were of cracking at or near lap joints. Six of the 10 reports involved lap joints in the upper lobe, while the remaining 4 reports indicated cracks from the lower lobe of the fuselage. (See Appendix H.) One report was submitted after the effective date of AD 87-21-08, November 2, 1987. All of the airplanes cited in the 10 reports were among the first 291 B-737 airplanes assembled by Boeing.

There were 18 SDRs on file pertaining to airplanes in the Aloha Airlines fleet. Three reports were on lap joint cracks/corrosion previously cited, and two reports were about upper lobe skin cracking where lap joint involvement could not be established from the information given. Three of the reports pertained to lower lobe skin corrosion; an additional three reports cited corrosion at cargo door frames and the nose gear wheel well structure. The remaining seven reports involved cracks in fuselage structure other than skin or lap joints.

1.17.5 Supplemental Structural Inspection Program (SSIP)

As the high-time airplanes in the world fleet of jet transport category airplanes began to approach their original lifetime design objectives, the industry questioned the continued airworthiness of the aging fleet since many of the airplanes would continue in service beyond design objectives. This concern ultimately led to a requirement for a structural reassessment or audit and the development of a continuing structural integrity program for older transport airplanes. The air transport airframe manufacturers developed the required programs, utilizing different concepts, to achieve continued airworthiness of their aging airplanes. The structural integrity programs have resulted in directed inspections of SSIs (any detail, element, or assembly that contributes significantly to carrying flight, ground, pressure, or control loads and whose failure could affect the structural integrity necessary for the safety of the airplane) at appropriate initiating thresholds and repeated intervals to detect fatigue damage before the loss of residual strength of the airplane's structure.

In 1978, the portion of 14 CFR 25.571 dealing with fail-safe requirements was revised to reflect state-of-the-art advances in fracture mechanics and structural analysis. The new regulation required consideration of damage growth characteristics at multiple sites, and an inspection program to incorporate these analyses to ensure that the damage was detected before the residual strength of the airplane dropped below the regulatory fail-safe requirements. This was called the damage tolerance concept.

Boeing's approach to the aging fleet problem for the 727/737/747 (which were certificated under the pre-1978 14 CFR 25.571 criteria) was to reassess these airplanes using the revised 14 CFR 25.571 damage tolerance requirements. This reassessment required determination of residual strength

with the presence of multiple active cracks, extensive analysis of crack growth rates, and incorporation of these engineering determinations into the airplane's maintenance program. Boeing applied the same methodology to the reassessment of the early model airplanes that was developed to certificate the models 757/767 in accordance with revised airworthiness regulations. The development of the program was a cooperative effort between Boeing and an industry steering group. The FAA and the Civil Aviation Authority of the United Kingdom were observers, and the FAA subsequently mandated implementation of the program by an AD. For the B-737, the program was to be in effect no later than November 1985.

Using a probabilistic approach which assumed that fatigue cracking had occurred in the fleet and that the highest time airplanes were the ones that would encounter cracks first, Boeing recommended a candidate fleet of high-time airplanes to be inspected under the SSIP. For the B-737, the candidate fleet consisted of about 125 airplanes, including the accident airplane operated by Aloha Airlines. Positive crack indications were to be reported promptly to Boeing, where the discrepancy would be evaluated. If the problem was applicable to the rest of the fleet, an SB for inspection or repair would be issued and subsequently mandated by the FAA through AD action. Since the program was devised to detect instances of previously unknown fatigue cracking of a structure, the SSI was to be dropped from the program once fatigue cracking became known and corrected through the AD process.

During the program formulation, a structural classification system was devised to determine which SSIs ultimately would be included in the SSIP. Only the SSIs where damage detection was to be achieved through planned inspection were included in the SSIP. One of the classifications by which SSIs were excluded from directed supplemental inspections was that of "damage obvious or malfunction evident." An example of a structure that meets this classification is wing skin, where surface cracks are evident through fuel leakage, and fuselage minimum gage skin that announciates a failure by controlled decompression through flapping. Other manufacturers include fuselage skin in their structural inspection requirements.

Aloha Airlines had incorporated the SSIP into the maintenance programs of the candidate airplanes they operated. Among these airplanes were N73711, the accident airplane, and N73712, as stated before, the highest cycle 737 in the world fleet.

Aloha Airlines' incorporation of the SSID program into its maintenance schedule was approved by the FAA. The SSID provides the operator with procedures to evaluate and supplement their existing structural inspection program by utilizing directed supplemental inspections. Aloha Airlines had not discovered or reported any items following the performance of SSID inspections.

1.17.6 FAA Surveillance of Aloha Airlines Maintenance

The FAA's Principal Maintenance Inspector (PMI) has the responsibility to oversee an airline's compliance with Federal regulations

with respect to maintenance, preventive maintenance, and alteration programs. The PMI determines the need for and then establishes work programs for surveillance and inspection of the airline to assure adherence to the applicable regulations. A portion of the PMI's position description reads as follows:

> Provides guidance to the assigned air carrier in the development of required maintenance manuals and record keeping systems. Reviews and determines adequacy of manuals associated with the air carrier's maintenance programs and revisions thereto. Assures that manuals and revisions comply with regulatory requirements, prescribe safe practices, and furnish clear and specific instructions governing maintenance programs. Approves operations specifications and amendments thereto.
>
> Determines if overhaul and inspection time limitations warrant revision.
>
> Determines if the air carrier's training program meets the requirements of the FARs, is compatible with the maintenance program, is properly organized and effectively conducted, and results in trained and competent personnel.
>
> Directs the inspection and surveillance of the air carrier's continuous airworthiness maintenance program. Monitors all phases of the air carrier's maintenance operation, including the following: maintenance, engineering, quality control, production control, training, and reliability programs.

At the Safety Board's public hearing on the accident, the PMI for Aloha Airlines at the time of the accident stated that he was trained as an FAA air carrier inspector and had been assigned to Aloha Airlines since January 1987. He attended a recent course in maintenance planning; however, he had not received any specific training in corrosion control, multiple site fatigue damage, or management of high time "lead the fleet" aging aircraft. He stated that he was not aware of an FAA course devoted specifically to PMI duties.

The Honolulu FAA Flight Standards District Office (FSDO-13) held the FAA certificates of Aloha Airlines. The office Work Planning Management System (WPMS) records were reviewed for aircraft records examinations and spot and ramp inspections accomplished on N73711 and N73712, for 6 months before the accident. The review of these records disclosed that all required WPMS activities had been accomplished and that the PMI maintained a continuous surveillance of the airline. In addition, the PMI had been informed when skin cracks on S-4L and S-4R were found on N73712 on April 26, 1988. No record was found nor required indicating that the PMI examined the S-4R repair on N73711 which was signed off by the Aloha Airlines inspector on November 14, 1987.

FAA surveillance of Aloha Airlines maintenance activities was organized around the daily work schedule of the PMI. In a few cases, the PMI visited the Aloha Airlines maintenance facility early in the morning to assess maintenance practices. In most cases, his visits took place after the majority of the maintenance work had been accomplished. Thus, the PMI primarily observed completed maintenance actions rather than work in progress or the actual condition of airplanes before the start of a repair.

The PMI stated that his heavy workload assignment made frequent visits to observe Aloha Airlines maintenance program impossible. The PMI was responsible for nine air carriers and seven repair stations. These carriers and repair stations were spread throughout the Pacific basin and were situated in the People's Republic of China, Taiwan, Hong Kong, Singapore, the Philippines, and Hawaii. He stated that the travel distances reduced the time available for surveillance of each operator. The PMI stated that he was "zeroing in on getting the organization [Aloha's maintenance department] up to date, modernized, getting the program changed to a program that would recognize the changes that [had] taken place over the years." The PMI stated that he had recognized a "lack of depth in Aloha management" and was concentrating his efforts at Aloha Airlines to resolve this issue. The PMI believed that improving management would also result in improvements in Aloha Airlines operational maintenance program.

The Aloha Airlines Operations Specifications for maintenance inspection time intervals in effect at the time of the accident was dated August 30, 1982, well before the arrival of the current PMI. A D-check interval of 11,000 hours was extended to 15,000 hours by the previous PMI at the request of the operator. The time increase was based on the "excellent reliability of the airframe structure and inspections (which) disclosed no significant findings...." The Aloha Airlines Maintenance Manual containing the D check program[16] had been established in 1972.

Further, the PMI was not familiar with Aloha Airlines prior to his assignment as PMI. He testified at the Safety Board public hearing that other members of the FSDO, including the previous PMI, had informed him that Aloha Airlines was a good operator and that there were no problems with the maintenance department. The new PMI stated that he was not made aware of the high-time status of some Aloha Airlines aircraft, nor did he receive any information regarding the in-service model testing of the B-737 conducted by the manufacturer in the fall of 1987.

---

[16]The PMI does not formally approve the airline manual or changes, but the PMI has the responsibility to review the manual and promptly advise the operator when any portion is found unacceptable. (Reference, Airworthiness Inspectors Handbook, Department of Transportation, Federal Aviation Administration, Order 8300.9 July 25, 1985, Chapter 6, Section 4, Maintenance Manual Requirements.)

1.17.7 Boeing Commercial Airplanes Customer Visits

As an adjunct to the Aging Fleet Program required by the SSID, Boeing initiated a program to assess aging airplane structures and systems. The Boeing Aging Fleet Evaluation Program consisted of Boeing survey teams visiting operators to assess the condition of aging 707, 720, 727, 737, and 747 airplanes by observing selected airplane structures, systems, and maintenance programs. The program also provided Boeing with information on problems encountered by the operators during maintenance. The objectives of this program were to observe the effectiveness of maintenance programs, observe the effectiveness of corrosion prevention and control, gather information to ensure safe and economic operation of aging airplanes, and promote improved design of new airplanes. Thirty-five operators from 19 countries initially were selected for and agreed to host team visits.

Aloha Airlines was one of the operators visited by the Boeing team. The selection of Aloha was based on its operation of the highest flight/cycle time airplanes in the B-737 fleet and the fact that several of Aloha Airlines B-737s had exceeded 75 percent of the airplane's design life objectives.

The Boeing team's first visit to Aloha Airlines maintenance facility occurred from September 17 to 23, 1987. During this visit, the team surveyed N73712 while it was in for a heavy maintenance inspection. From October 22 to 29, 1987, the team returned to survey N73713.

On October 28, 1987, senior Boeing executives met with Aloha Airlines' president and chief executive officer and its vice president of operations to discuss the findings of the survey team. At this meeting, Boeing personnel voiced their concern about the corrosion and skin patches found on the two airplanes. At that time, Boeing personnel recommended, among other things, that Aloha Airlines "put present airplanes down for a period of 30 to 60 days and totally strip and upgrade the structure."

In a letter dated October 27, 1987, Aloha Airlines requested the Boeing Maintenance and Ground Operations Systems (MGOS) organization to evaluate Aloha Airlines maintenance operations. According to Aloha Airlines management staff, the request was generated by their concern to upgrade and modernize their maintenance program. A Boeing team visited Aloha Airlines facilities and evaluated its maintenance program in November 1987.

A similar "aging fleet" survey of N73717 was accomplished from January 8 to 15, 1988. At that time, the Boeing team observed the repair of a S-4 body skin lap splice while the airplane was in for heavy maintenance.

The MGOS report on maintenance operations was delivered to Aloha Airlines January 30, 1988, and contained 37 recommendations. (See appendix I.)

On April 14, 1988, Aloha Airlines met with Boeing to discuss the findings of the aging aircraft survey team and the MGOS recommendations with Aloha Airlines management. Boeing personnel stated they were under the impression that Aloha Airlines was planning to delay the recommended

structural overhaul of its high-time airplanes. In fact, at that time, a high-time airplane (N73712) was in the hangar for heavy maintenance. Boeing personnel requested that the FAA PMI be excluded from this meeting in order to "protect the confidential relationship existing between Boeing and the customer airlines." The following recommendations were made by Boeing to Aloha:

> Reinstate plan to conduct complete structural inspection on at least the following airplanes: N73711, N73712, N73713, N73717.
>
> Conduct a detailed S-4 lap splice inspection on all airplanes having over 40,000 flight cycles and perform total corrective action on any discrepancies found.
>
> Initiate belly skin replacement program.
>
> Reinstate existing corrosion control program immediately.
>
> Initiate, when available, Boeing developed maintenance program including recommended corrosion control program.
>
> Review and correct, as necessary, supplemental structural inspection program and airplane sampling program requirements.

A package of briefing notes and related material pertaining to the Boeing team visits and briefings to Aloha was reviewed by the Safety Board.

After the accident, Aloha Airlines responded directly to the Safety Board with comments addressing the Boeing visits and its documentation. Regarding the maintenance organization evaluation, Aloha Airlines stated that they had initiated actions to comply with many of the recommendations before they received the report. Their reply in part said:

> Prior to the issuance of the January 30, 1988, maintenance organizational evaluation, many of the recommendations had already been implemented. Since that date and prior to April 28, 1988, several major programs, including the total reorganization of the Quality Assurance and Maintenance departments, have been accomplished. The remaining recommendations, including a new heavy maintenance program currently being written by Boeing, are in the process of being implemented. This program will tailor Aloha's current corrosion control practices to Boeing's recommended corrosion control procedures.
>
> Since the Boeing report was written, Aloha had added a Staff Vice President of Quality Assurance and Engineering, a Director of Quality Assurance and a Chief Inspector. These positions were added to assure assertiveness and stature of Aloha's inspectors. In addition, the Manager of Operations Standards is preparing a new Training Manual, which does include a special emphasis on corrosion detection. Aloha has

asked Boeing to provide additional training for inspectors in non-destructive testing techniques and procedures.

On March 1, 1988, Aloha increased the number of management people in the Quality Assurance Department from 1 to 4 and created a new three (3) person operations department for training and technical publications and a new manager of shops position. An additional manager and supervisor in Maintenance have been added.

Under the new maintenance program, "C" checks will be accomplished in a two-week extended visit rather than in overnight segments. As part of the new "C" check package, critical flow charts will be developed to monitor the development of the checks.

Regarding the aging aircraft evaluation, Aloha Airlines noted that Boeing did not present their briefing (and slide presentation) until as much as 6 months after their initial visits. Aloha further stated:

> Boeing's reference to "the deteriorated condition of high cycle 737's" is illustrative. When discussing the condition of these aircraft following the commencement of Boeing's aging fleet analysis with (officials) of Boeing, Aloha's President and Vice President of Operations were assured that the aircraft were safe to continue in operation. This teleconference occurred on October 16, 1987. These assurances were given during Boeing's aging fleet evaluation.
>
> Like many airlines, Aloha had relied upon FAA designated engineering representatives and engineers from Boeing's Customer Support group to assure structural integrity. In addition, Boeing has maintained an on-site customer support office manned by a Boeing customer service representative since 1969. Aloha has an effective program of structural repair. All required structural terminating actions have been accomplished. Aloha has 42 years of corrosion control experience in a harsh environment. In fact, Boeing visited Aloha for its aging fleet analysis while two Aloha aircraft were undergoing scheduled corrosion control and repair. While Aloha aircraft experienced a high number of flight cycles, it is also true that those same aircraft fly at lower altitudes and pressure differentials than other air carriers.

1.17.8 The National Aviation Safety Inspection Program

As part of the FAA's National Aviation Safety Inspection Program (NASIP), a notice published by the FAA on April 13, 1987, "Interim Guidance For Conducting Indepth Inspections", states, "The objective of indepth inspections is to determine air carrier compliance with the FARs, including company procedures and policies that are FAA approved, and with written FAA guidance material." Guidance in the form of inspection criteria is provided

to focus on operational and airworthiness regulatory items which can clearly be recognized as in place or not present. Neither quality assessment of the various programs nor the identification of systemic deficiencies of airline operations or FAA surveillance are included as objectives of the NASIP.

The most recent special FAA inspection of Aloha Airlines before the N73711 accident was conducted in December 1987 as part of the NASIP. Aloha Airlines was suggested for inclusion in the NASIP schedule by the FAA's regional director because the airline had not had a recent indepth inspection. FAA personnel, including the team leader for this inspection, were assembled from FAA regions other than FSDO-13.

A preinspection NASIP team briefing was conducted at FAA headquarters. At the Safety Board's public hearing, the manager of the Flight Standards Evaluation Staff of the FAA stated:

> There were no items that were specific to Aloha at that time--and this briefing was conducted--for Aloha, was conducted in September 87. Trending up to that point demanded that we look at management, that we look at Airworthiness Directives compliance, that we look at training programs, those kinds of things.

FAA personnel involved in the inspection later revealed that the team was instructed to:

> conduct a thorough records review, look carefully at the airline methods of compliance with regulatory items such as the [minimum equipment lists] and ADs, and then go to the airplanes to insure that things were actually accomplished.

There was no advance inspection emphasis placed on the harsh operating environment, the SSID program, "fleet leader" aircraft, aging aircraft, or specific condition of the aircraft on the ramp.

The December 1987 NASIP report of Aloha Airlines contained numerous regulatory compliance findings. The following were the general introductory findings:

> Aloha Airlines Maintenance Management has been remiss in their responsibilities by not being able to recognize their own deficiencies as this report will indicate. The size and characteristics of Domestic and Flag Carriers demand a formal management organization to establish and maintain controls over mandatory areas such as Continuing Analysis and Surveillance, Reliability Programs, development and control of its policy manual, recordkeeping systems and compliance with its operations specifications.
>
> This inspection reveals that the present management group has the knowledge and expertise to perform the technical tasks conducive for the airline function. However, it will be shown

throughout the report, that TSAA [Aloha] management has fallen short of being able to accomplish its obligation for compliance of the FAR's particularly in the area of Continuing Analysis and Surveillance, and Maintenance Reliability.

A selection of representative NASIP findings follows:

2.2.4 Operations Specifications, Page 11 of 15 authorizes "Reliability Programs" based on the following:

a. Propulsion System Reliability Control Program Pratt and Whitney JT8D-7, JT8D-9, and JT8D-17, document dated July 2, 1971.

b. Auxiliary Power Unit Reliability Program Airesearch GTC P-85-129 document, dated March 16, 1972.

c. Hydraulic System Internal Leakage Test (HIST) Program document, dated July 20, 1976.

This Operations Specifications page is invalid due to the nonexistence of the aforementioned documents. In addition, the above documents are not on file at the Honolulu FAA FSDO.

2.4.1. Training records for Aloha Airlines Inspectors do not contain a description or source of the material used for training in non-destructive testing.

2.4.2. Training records for 3 Supervisors have no entries.

2.4.3 Examination of processes used in maintenance revealed that composite material repair is being accomplished by untrained mechanics. Review of the training program and discussion with individuals verified the fact that Aloha has no training program for composite material repair.

2.4.4 The Aloha Training Manual states that a minimum average grade of 70% must be attained on all formal classroom training. In a conference with the person who schedules training and maintains training records, he stated that written examinations are not conducted; therefore there are no procedures for grading of training received as required by Aloha Airlines manual.

2.14.1 Aloha Airlines, Inc. Continuing Analysis and Surveillance Program does not contain adequate procedures and standards to meet the requirements of FAR 121.373 for such a program. The type of finding(s) in this NASIP report serve to substantiate that Aloha Airlines does not have an effective internal audit program.

2.16.7 Aloha Airlines, Inc. has no procedure to classify repairs as major or minor and has no information concerning any minor or major repairs, in their General Maintenance Manual.

2.16.8 The Aloha Airlines General Maintenance Manual (GMM), Section 3-31, Authority For Change states, "All major repairs and alterations which are not covered by manufacturer's approved data shall require FAA approval." This is incorrect because the manufacturer's data must be FAA approved.

After the inspection, the FAA provided Aloha Airlines with a copy of the investigative team's findings and the airline was provided an opportunity to respond. The Aloha Airlines response was evaluated by the local FSDO staff. Consistent with the FAA Flight Standards policy, the NASIP team inspectors were not involved in the followup, review, or closeout of any negative findings. If a response was considered to be adequate by the local FAA staff, the investigative team's finding was classified as "closed" and removed from the report. This evaluation process was repeated monthly by the local FAA staff and resulted in a "Status of Findings/Corrective Action" letter to Aloha Airlines dated April 21, 1988. This letter was reviewed by the Safety Board. It was found that the outstanding corrective actions did not address specific airplane structural maintenance pertaining to the accident airplane.

1.17.9 Subsequent FAA Action

The day following the Aloha Airlines accident, the FAA issued AD T88-09-51 applicable to all B-737's with more than 55,000 landings, requiring flight at reduced cabin pressure and visual inspections of the lap splices at S-4 and -10L and R and all circumferential splices between BS 360 and 1016.

After the receipt of more information, AD T88-09-51 was superseded by AD T88-10-51 issued May 4, 1988, applicable to all B-737's with more than 30,000 landings, requiring visual inspections of all lap splices and eddy current inspections of lap splices at S-4 and -10L and R. Additionally, a reporting requirement was included for positive indications of cracking or corrosion. The FAA received reports from 18 operators reporting a total of 49 findings of corrosion or minor cracking (small, isolated cracks). Fourteen airplanes had multiple site cracking (cracks emanating from six or more adjacent fasteners).

A postaccident evaluation of Aloha Airlines was conducted May 7 through 15, 1988, by a special FAA team from the Western-Pacific Region. The team was instructed to conduct an in-depth inspection of the Aloha Airlines structural inspection program and review the compliance with structural airworthiness directives. A hands-on inspection of the Aloha Airlines fleet was not undertaken.

AD 88-22-11 became effective on November 21, 1988, requiring the inspections of lap splices and tear straps; AD 88-22-12 was effective on December 1, 1988, requiring the inspections of bonded doublers and circumferential splices. In addition, the mandatory replacement of the rivets along the upper rows of the lap splices was proposed by a new Notice of Proposed Rulemaking (NPRM) signed on October 27, 1988. The final rule was published as AD 89-09-03 and became effective May 8, 1989.

As a result of an FAA sponsored "Conference On Older Airplanes" held in June 1988, an airline industry task force led by the Airline Transport Association, has recommended to the FAA a modification or replacement program to assure the airworthiness of older aircraft. The task force involved some 150 international experts representing the airlines, airframe manufacturers, regulatory agencies, National Aeronautics and Space Administration, and professional aviation mechanics from the United States and Asian and European nations.

As a result of the industry effort, early models of Boeing 727, 737, and 747 airplanes will undergo intensified maintenance and inspection procedures, many of which will require modification or replacement of selected areas or parts rather than continued inspection. Aircraft areas affected will include lap joints and bonded joints which have experienced delamination or corrosion. In addition, widescale modification, replacement of aircraft structural materials, fittings and skin has been recommended on the basis of service experience. Many of the changes (terminating actions) are already being accomplished at airline maintenance bases. Boeing consolidated all of the proposed modifications into a single document for each airplane type in March 1989. The FAA issued an NPRM for each airplane type which proposes the mandatory completion of the modifications listed in the Boeing documents when an airplane reaches its economic design goal, or within 4 years, whichever occurs later. Other airplane manufacturers' older model airplanes are also under review with similar proposals for consolidated service documents.

In addition, the FAA Flight Standards Service created an ongoing Aging Fleet Program. Aging fleet evaluation teams were formed with specialists, district office inspectors, and certification engineers. These teams are visiting airlines to evaluate, through over-the-shoulder inspection, the effectiveness of the airline's corrosion control programs, structural inspection techniques, and AD accomplishment. The goal of the Aging Fleet Program is to recommend methods, policy, or regulatory changes to improve the maintenance program for operators of aging fleet aircraft to ensure that each operator is aware of and is applying maximum effort in the application of structural inspection programs to allow aging fleet airplanes to continue safely in revenue service.

2. ANALYSIS

2.1 General

The flightcrew of flight 243 was qualified in accordance with applicable Federal Aviation Regulations and company policy and procedures. The airplane was certificated, equipped, and operated according to applicable regulations. Meteorological conditions were not a factor in this accident. Aerodrome, navigation, and communications facilities did not contribute to the accident.

The Safety Board determined that the accident sequence initiated with the structural separation of the pressurized fuselage skin. As a result of this separation, an explosive decompression occurred, and a large portion of the airplane cabin structure comprising the upper portion of section 43 was lost.

The Safety Board's analysis of this accident included an evaluation of the structural and metallurgical evidence to determine the initial failure origin and the manner of fuselage separation. Further, the Safety Board analyzed the quality and effectiveness of Aloha Airline's maintenance practices and the FAA's oversight of that program. Also, human factors aspects of airline maintenance and inspection programs were examined to determine if important but repetitive tasks can be performed more accurately by the assigned personnel. The Safety Board also evaluated the B-737 structural design and certification concepts and the support role of the manufacturer and the FAA regarding the continuing airworthiness of high time/high cycle B-737s specifically, and the "aging aircraft" fleet in general.

Finally, due to concerns about the continuing airworthiness of aging transport category aircraft under existing policies, practices, and regulations, the report analyzes the existing design concepts and regulations that permit a transport aircraft to have an indefinite service life based on proper maintenance, inspection and repair.

2.2 Origin of Fuselage Separation

A postaccident examination of N73711 revealed that the remaining structure did not contain the origin of the failure. Since the sea and air search did not locate recoverable structure from the airplane, it was necessary to determine the failure origin by examining and analyzing the remaining structure and the airworthiness history of the airplane.

An examination of the production butt joint at BS 360 (the forward edge of section 43) revealed that the frame was intact, as were the skin and rivets forward of the joint centerline. Aft of the joint centerline, nearly all of the rivets remained in the splice doubler. These rivets were deformed aft, although the rivets between S-5L and S-4R were also deformed to the right of aft. This deformation indicated that the skin immediately aft of BS 360 was intact up to the time of separation. Similarly, the skin at the butt joint at BS 540 (aft edge of section 43) was intact at the time of the

separation, as indicated by the forward deformation of the rivets in the splice doubler. The BS 540 frame itself also was intact. This evidence indicated that the primary failure had originated at a location between BS 360 and BS 540 and that the skin at these butt joints was pulled away in tension overload as a result of the primary failure.

As a result, the areas along the longitudinal separation of section 43 were examined as a likely area for the origin of the failure. Very little of the structure in section 43 from the left side of the fuselage above the floor was found. The frames between BS 360 and 540 on the left side had broken at floor level with a substantial portion of the structure separating outward, downward, and aft. This mode of separation was corroborated by the degree of ingestion damage to the left engine and leading edge damage to the left wing and horizontal stabilizer.

In addition, the right side of the fuselage portion of section 43 that remained with the airplane was severely distorted and bent outward more than 90^{0}. Five consecutive floor beams at BS 420, 440, 460, 480, and 500 were broken all the way through. Also, adjacent floor beams at BS 400 and BS 500A were cracked nearly all the way through. Most of the center floor panels on the left side from BS 360 to BS 947 had lifted.

The right side cabin floor panels were not displaced, and little if any distress had occurred at the fastener locations for these panels; however, floor panels on the left side of the cabin between BS 400 and BS 500 along the inboard seat track were displaced. This damage suggested that the initial failure was on the left side of the fuselage. Further, the size and the characteristics of the separated area, coupled with the intact structure at BS 360 and BS 540, indicated that the defect was oriented longitudinally along the fuselage.

The severely damaged left cabin floor suggests that the origin of the initial failure area was on the left side of the fuselage. As the cabin pressure in the upper lobe was released, the pressure in the lower lobe was contained by the cabin floor. However, the cabin floor was not designed to sustain a large pressure differential. Consequently, the cabin floor of N73711 deflected upward during decompression, and floor panel failures allowed release of the pressure in the lower lobe.

Studies conducted by Douglas Aircraft following a foreign operated DC-10 accident[17] related to a cargo door failure disclosed that distribution of the pressure differential during an explosive decompression peaks at the point of the opening in the fuselage. This pressure peak also can cause the maximum damage to the floor, depending on the strength of the floor structure, the magnitude of the pressure differential that exists before the failure, and the size of the opening in the fuselage.

---

[17]Turkish Airlines Accident, DC-10, TC-JAV, Ermononville Forest, France, March 3, 1974.

The point of maximum floor deflection on N73711 occurred at and to the left of the inboard seat track for the left side seats at BS 440 (seat row 3); this is an area of the floor that is strengthened to sustain cabin seat loads. Therefore, the Safety Board concludes that the initial failure occurred on the left side of the fuselage in section 43, probably near BS 440.

Because of the damage pattern on N73711 and the service history of the lap joints on earlier B-737s, the most probable origin sites were the three upper lobe lap joints on the left side of the airplane--S-4, S-10, and S-14. The lap joint at S-4L was eliminated as the location of origin of the failure because of the aft and right movement of the separated structure along BS 360 between S-5L and S-4R. The movement indicated that the origin was lower and to the left of S-5L at the lap joint along S-10L or S-14L.

Had the fuselage first separated along S-14L (below the window line and above the floor line), there would have been only a small fuselage wall remaining above the floor to react to the pressure inside the cabin. The resultant force reacted by this small wall area and internal pressure would have been insufficient to bend the wall outward to break the frames. However, the fuselage on the left side was torn extensively into the lower lobe, and the fuselage frames had separated above and below the floor line. Thus, the Safety Board concludes that the separation was probably above the lap joint at S-14L, that is, at the lap joint at S-10L.

At BS 520 in the remaining fuselage, there were fatigue cracks emanating longitudinally from both sides of at least seven adjacent rivet holes in the skin along the lap joint at S-10L. Although this was not the failure origin, such cracking is indicative of the type of preexistent cracking that probably was present along random areas of the lap joint at S-10L.

Further, a passenger had noted and later reported a skin crack aft of the forward entry door near a top row of lap joint rivets for S-10L while boarding the airplane. (The passenger later was escorted to a similar airplane and verified the observation.) The Safety Board believes that the top rivet row was cracked at the S-10L lap joint just aft of BS 360 before the accident flight takeoff.

Additionally, passengers seated on the left side of the airplane stated that the location of the missing flight attendant immediately before the decompression was in the aisle at seat row 5. During the decompression, evidence indicates that the flight attendant was ejected from the airplane at a location corresponding to S-10L near BS 440.

Consequently, the Safety Board determines that the fuselage of N73711 most probably failed catastrophically along S-10L, initially near BS 440, allowing the upper fuselage to rip free. The reason for this catastrophic failure, rather than the intended fail-safe "flapping" of the skin as designed, was evaluated by the Safety Board.

2.3 Fuselage Separation Sequence

The redirection of a longitudinal fuselage crack, and thus the success of the flapping mechanism to safely decompress an airplane, depends on the integrity of the structure ahead of the crack tip. If tear straps are disbonded, they become ineffective because stiffening is lost, and the crack can propagate as if the tear straps did not exist. In that case, controlled (safe) decompression may not occur.

Multiple site damage (MSD) describes multiple fatigue cracks along a rivet line. MSD can range from a few fatigue cracks among many rivet holes to the worst case of small, visually undetectable fatigue cracks emanating from both sides of rivet holes along a complete row of skin panel fasteners. It is theoretically possible that this worst case condition may result in a catastrophic failure of the fuselage before any crack is visually detected. The presence of MSD also tends to negate the fail-safe capability of the fuselage. An FAA report on the subject of MSD is included as appendix J.

The MSD found during service on other B-737 lap joints in the worldwide fleet was in random areas along the lap joints. The initial occurrence of disbonded lap joints in random locations leads to fatigue cracking in random areas. Inspections and examinations of the remaining portion of the accident airplane in the upper lobe aft of the fuselage separation area revealed that the MSD was most prevalent in the mid-bay areas (between adjacent circumferential tear straps). Fatigue cracks up to 0.53 inch in length were evident in the lap joint along S-10L near BS 520. The section of S-4R recovered from the right wing leading edge contained numerous fatigue cracks that stemmed from disbonding of the cold-bonded lap joint and disbonding of the hot-bonded tear straps.

The intended function of the bond (to carry the hoop stress and fatigue loads through the lap joint) is lost when the joint is disbonded and the rivets must carry the load. Because the lap joint rivets are countersunk, the knife edge created by the countersink produces a stress concentration that leads to fatigue cracking from the rivet hole. Therefore, while a disbonded lap joint can withstand the pressurization cycles that a properly bonded joint is intended to carry, the lap joint becomes more susceptible to fatigue cracking.

It is probable that numerous small fatigue cracks along S-10L joined to form a large crack (or cracks) similar to the crack at S-10L that the passenger saw when boarding the accident flight. The damage discovered on the accident airplane, damage on other airplanes in the Aloha Airlines fleet, fatigue striation growth rates, and the service history of the B-737 lap joint disbond problem led the Safety Board to conclude that, at the time of the accident, numerous fatigue cracks in the fuselage skin lap joint along S-10L linked up quickly to cause catastrophic failure of a large section of the fuselage.

The Safety Board believes that sufficient fatigue cracking or tear strap disbond (or a combination of both) existed in the lap joint at S-10L to negate the design-intended controlled decompression of the structure.

The Safety Board further believes that Aloha Airlines had sufficient information regarding lap joint problems to have implemented a maintenance program to detect and repair the lap joint damage. The information available to Aloha Airlines on lap joint problems included the following:

- the B-737s in the Aloha Airlines' fleet were high-cycle airplanes accumulating cycles at a faster rate than any other operator;
- Aloha Airlines operated in a harsh corrosion environment;
- Aloha Airlines previously had discovered a 7.5-inch crack along lap joint S-10L on another B-737 airplane;
- Boeing had issued, and records indicate that Aloha Airlines was aware of, a SB covering lap joint inspection and repair in 1972, revised in 1974, and upgraded to an ASB in 1987; and
- the FAA had issued an AD in 1987 requiring inspections of the lap joints along S-4 and referencing the Boeing ASB, which called for inspection of other lap joint locations, including along S-10.

2.4 Aloha Airlines Maintenance Program

The Safety Board identified three factors of concern in the Aloha Airlines maintenance program. They were: a high accumulation of flight cycles between structural inspections, an extended time period between inspections that allowed the related effects of lap joint disbond, corrosion, and fatigue to accumulate, and the manner in which a highly segmented structural inspection program was implemented.

The Aloha Airlines structural D check inspection interval for the continuing airworthiness of their B-737 fleet was approved by the FAA at 15,000 hours. The selection of 15,000 hours appears to have been more conservative than the 20,000-hour interval recommended by Boeing. However, because of the daily frequency of short duration flights, the rate of accumulation of flight cycles on Aloha Airlines airplanes exceeded the rate which Boeing forecast when the B-737 MPD was created. Aloha Airlines records of aircraft utilization indicated that their airplanes accumulated about three cycles for each hour in service. The Boeing economic design life projections were based on accumulating about 1 1/2 cycles per flight hour. Thus, Aloha Airlines airplanes were accumulating flight cycles at twice the rate for which the Boeing MPD was designed. Even with an adjustment for partial pressurization cycles on short flights, and thus partial loading of the fuselage, the accumulation of cycles on Aloha Airlines airplanes remained

high and continued to outpace the other B-737 airplanes in the world fleet and Boeing's assumptions in developing the MPD.

The Aloha Airlines maintenance program did not adequately recognize and consider the effect of the rapid accumulation of flight cycles. The Safety Board notes that flight cycles are the dominant concern in the development of fatigue cracking in pressurized fuselages and the accumulation of damage as a result of flight and landing loads. The Aloha Airlines maintenance program allowed one and one half times the number of flight cycles to accumulate on an airplane before the appropriate inspection. The Safety Board believes Aloha Airlines created a flight-hour based structural maintenance program without sufficient regard to flight cycle accumulation.

The Boeing MPD assumed a 6- to 8-year interval for a complete D check cycle, and the Aloha Airlines D check maintenance program required 8 years to complete a D check cycle. The Safety Board believes that the 8 year inspection intervals in the Aloha Airlines maintenance program was too lengthy to permit early detection of disbond related corrosion, to allow damage repair, and to implement corrosion control/prevention with the maximum use of inhibiting agents.

Of additional concern to the Safety Board was Aloha Airlines' practice of inspecting the airplane in small increments. The Aloha Airlines D check inspection of the B-737 fleet was covered in 52 independent work packages. Limited areas of the airplane were inspected during each work package and this practice precluded a comprehensive assessment of the overall structural condition of the airplane.

The Safety Board believes that the use of 52 blocks/independent work packages is an inappropriate way to assess the overall condition of an airplane and effect comprehensive repairs because of the potential for air carriers to hurry checks in order to keep airplanes in service. Further, the fact that the FAA found this practice to be acceptable without analysis is a matter of serious concern.

The effectiveness of Aloha Airlines inspection programs was further limited by time and manpower constraints and inadequate work planning methods. Maintenance scheduling practices utilized the overnight nonflying periods to accomplish B checks which, in reality, included portions of the C and D check items. However, since there were usually no spare airplanes in the fleet, it was obvious to both the maintenance and inspection personnel that each airplane would be needed in a fully operational status to meet the next day's flying schedule. Thus, only a few hours were available during each 24 hour period to complete B, C and D inspection items and to perform any related or unscheduled maintenance on the airplane.

The Safety Board believes that the FAA should include in its procedures for the approval of airline maintenance programs, deviations in airplane use by the operator as compared to the manufacturer's original design estimate, tempered by the operating history of the existing fleet. A

calendar cap for low-flight hour operators and a maximum cycle limit for short flight operators are more appropriate inspection intervals for these operators.

The Safety Board also believes that the FAA should reevaluate the criteria and guidance provided to principal inspectors for approving individual operator's maintenance plans that divide structural inspections into a large number of independent work packages (segments) to be spread over the normal D check interval. The Safety Board recognizes the concept that the D check, as outlined in the MPD, for each aircraft is accomplished in a reasonable time period such as 3 to 5 weeks. A true heavy maintenance inspection involves extensive work which may take several days. Comprehensive structural inspections for aging airplanes, likewise, can best be accomplished by a D check in which the entire airplane is inspected and refurbished in one hangar visit. As an alternative, some operators have found it efficient to use yearly block C checks with a phased 1/4 D check inspection. Any deviation from this "full airplane" inspection at "seasonal scheduling intervals" should be evaluated carefully before approval.

Operator initiated changes to maintenance manuals and operations specifications are approved by the PMI. Many PMI decisions require knowledge of airplane engineering and human performance far beyond the capabilities of any one individual. The Safety Board believes that the PMI should be required to seek additional assistance or input from other divisions of the FAA and, through channels, from the manufacturer and other operators. The types of input, the sources for both airworthiness and flight standards information and the conditions under which such input should be used, need to be reviewed and guidance developed by the FAA so the PMI can perform his duties more effectively. Therefore, the Safety Board believes that the FAA should develop and provide guidance to the PMI for the approval of airline maintenance plans which are modified significantly from that outlined in the MPD.

2.4.1 Effectiveness of Inspections

An examination of the remaining portion of the S-4R fuselage structure of N73711 indicated that the S-4R lap joint had been inspected and repaired as a result of AD 87-21-08 in November 1987. At that time, cracks were detected visually and two repairs were accomplished. Although Aloha Airlines maintenance personnel stated that an eddy current inspection of the remaining rivets in the panel was conducted to comply with the requirements of the AD, no mention of this inspection was found in the maintenance records.

Initial examination of the lap joint between the two repairs disclosed visually detectable fatigue cracks that emanated from the fastener holes of the top row of rivets. Laboratory examination revealed the presence of many more cracks that were well within the eddy current detectable range. Additionally, it was noted that the upper rivet row between the repairs and forward and aft of the repairs still contained the original configuration countersunk rivets.

Striation counts of five of the largest fatigue cracks that were present in the upper fastener holes of the section outside the repaired area indicated these cracks grew less than 0.020 inch during the time between the inspection in November 1987 and the accident. A total of 2,624 cycles had accumulated on the accident airplane during this time. After the accident, the cracks ranged in length between 0.110 to 0.154 inch. Therefore, at the time of the AD inspection in November, the five cracks ranged from a low of about 0.09 inch to a high of about 0.13 inch.

Eddy current inspections performed by Aloha inspectors on N73711 after the accident could not detect cracks that were less than 0.08 inch in length, but the inspection reliably detected cracks that were larger than 0.08 inch. Since the striation counts indicated cracks existed in the structure that were above this value (0.08 inch) in length, and that were well within the detectable size for eddy current inspection, such cracks should have been detected along the upper row of rivets in S-4R during the November 1987 inspection. This finding suggests that either the eddy current inspection was not performed in November or that the quality of the inspection was such that the cracks were not found.

There are several possibilities why the inspectors, when complying with the AD, failed to find the detectable crack in the S-4R lap joint on N73711, even though the area reportedly was given an eddy current inspection and two inspectors performed independent visual inspections. First, the human element associated with the visual inspection task is a factor. A person can be motivated to do a critical task very well; but when asked to perform that same task repeatedly, factors such as expectation of results, boredom, task length, isolation during the inspection task, and the environmental conditions all tend to influence performance reliability.

Another factor that can affect the human element involved in maintenance and inspection pertains to the effect of circadian rhythms on human behavior. Airline maintenance is most often performed at night and during the early morning hours; the time of day that has been documented to cause adverse human performance. Maintenance programs are most effective if task scheduling takes into account the possible adverse effects of sleep loss, irregular work and rest schedules, and circadian factors on the performance of mechanics and inspectors.

For example, compliance with AD-87-21-08 required a close visual inspection of the lap joints along S-4L and R and eddy current inspection of the upper row of lap joint rivets along the entire panel in which defects were found. This imposed considerable demands on the inspector if the results of the inspection were to be reliable. The AD required a "close visual inspection" of about 1,300 rivets and a possible eddy current inspection of about 360 rivets per panel. Inspection of the rivets required inspectors to climb on scaffolding and move along the upper fuselage carrying a bright light with them: in the case of an eddy current inspection, the inspectors needed a probe, a meter, and a light. At times, the inspector needed ropes attached to the rafters of the hangar to prevent falling from the airplane when it was necessary to inspect rivet lines on top of the fuselage. Even if the temperatures were comfortable and the lighting was

good, the task of examining the area around one rivet after another for signs of minute cracks while standing on a scaffolding or on top of the fuselage is very tedious. After examining more and more rivets and finding no cracks, it is natural to begin to expect that cracks will not be found. Further, when the skin is covered with several layers of paint the task is even more difficult. Indeed, the physical, physiological, and psychological limitations of this task are clearly apparent.

The difficulties in conducting visual inspections was discussed by Dr. Colin Drury, a professor of Industrial Engineering at the State University of New York at Buffalo, during the Safety Board's public hearing. He indicated that in the inspection process, it is not easy for the human being to perform a consistent visual search because (1) the area the searcher can concentrate on at any one time is limited by the conspicuity or size of the defect to be looked for and (2) the search process may not be systematic enough; therefore, the searcher is prone to miss areas that were thought to have been covered. Further, there is the vigilance decrement during long inspection periods that have low event rates and to some extent involve social isolation. Dr. Drury testified that humans tend to detect fewer "signals" as time goes on, but also they give fewer "false detection alarms." What is happening in those cases is that inspectors will change the criteria of what they will report to the extent that an increasingly larger defect is needed before they will judge it to be reportable. Such vigilance decrements occur during very long and isolated inspection duty times in which there is a low probability of finding a defect. In such cases, the human being tends to proceed through the task by saying no when a decision is to be made.

Another factor that may have affected the performance of Aloha's maintenance and inspection personnel is related to the quality of support provided by Aloha management to assist these persons in the performance of their tasks. Proper training, guidance, and procedures are needed as well as an adequate working environment, sufficient aircraft down time to perform the tasks (i.e. flexible scheduling), and an understanding of the importance of their duties to ensure the airworthiness of the airplanes. Aloha Airlines training records revealed that little formal training was provided in NDI techniques and methods. The inspector who found the S-4R lap joint cracks requiring repair stated that only on-the-job training (OJT) had been provided since he became an inspector in August 1987; his training records show formal NDI training on September 17, 1987, when a 2-hour training session was given by a Boeing representative. Records indicate the inspector who provided the initial OJT had only 2 hours of formal NDI training, during the same 2-hour training session on September 17, 1987, provided by Boeing. Thus, the Safety Board is concerned about how much knowledge the inspector staff may have possessed about disbonding, corrosion, and fatigue cracking at the time that they were required to perform the critical AD inspection task. In fact, during deposition proceedings, the inspector who performed the first AD inspection on N73711 could not articulate what he should look for when inspecting an airplane for corrosion signs.

Also, Aloha's flying schedule involved full utilization of its airplane fleet in a daytime operation. Thus, the majority of Aloha's maintenance was normally conducted only during the night. It was considered

important that the airplanes be available again for the next day's flying schedule. Such aircraft utilization tends to drive the scheduling, and indeed, the completion of required maintenance work. Mechanics and inspectors are forced to perform under time pressure. Further, the intense effort to keep the airplanes flying may have been so strong that the maintenance personnel were reluctant to keep airplanes in the hangar any longer than absolutely necessary.

Inadequate guidance and support from Aloha management to its inspectors was evident also when the Production and Planning department sent to the inspector's mail box, the AD and SB on the inspection requirements of the lap joints along S-4 without further review or technical comment. These documents were complicated, critical to airworthiness, and subject to interpretation as evidenced by the disagreement about its content expressed by experts at the Safety Board's public hearing. These documents needed higher level review and written guidance as to their disposition before being sent to maintenance for action. Therefore, the Safety Board concludes that Aloha's management failed to provide adequate guidance and support to its maintenance personnel and this failure contributed directly to the cause of this accident.

While the foregoing indicates that there were deficiencies in the training, guidance, and support provided by Aloha Airlines management to its maintenance personnel, there are indications that, had these deficiencies not existed and the inspection task been well defined and structured properly, the inspection error rate would still not have been totally eliminated. This belief is, in part, supported by the reports received by the FAA after this accident as a result of AD-T88-10-11 which required inspection and reports on positive indications of cracks and corrosion found in early model B-737 airplanes. The FAA received 49 reports of corrosion or cracks not previously found; 14 of these instances involved multisite cracking. No matter how well organized a corrosion detection and crack detection program may be and no matter how dedicated and vigilant the NDI work force, the inspection process is inherently susceptible to some error rate. Therefore, the Safety Board believes that the terminating action of AD-T88-10-11, which consisted of drilling out the existing rivets and replacing them with protruding head rivets, an action adopted immediately by a number of airlines, was superior to the option in the AD that permitted repeated inspections and patching of cracks; a process that included substantial potential for human performance error. The Safety Board fully concurs with recent FAA terminating action for B-737 lap joints that requires installation of protruding head rivets as the mandatory solution to the lap joint disbonding and fatigue problem.

The Safety Board believes that exacerbating the difficulty in the inspection tasks of airline maintenance personnel is the fact that FAA approved training for aircraft maintenance technicians contains material that is largely irrelevant to the tasks that licensed personnel will actually perform in an airline environment. For example, 14 CFR 147, which governs the certification of maintenance personnel, requires that students in FAA approved maintenance schools be knowledgeable in such topics as wood airframes, airframe fabric repair, and application of paint and dope. In a time when the FAA is certificating air transport aircraft with fly by wire

technology, composite materials construction and computer self monitoring capabilities, the words "computer" and "composite" do not appear in the list of required curriculum subjects among airframe systems and components in 14 CFR 147, Appendix C. The Safety Board believes that current requirements for training aviation maintenance personnel fail to address the tasks that such personnel will actually perform following their licensure. The Safety Board is concerned about how well the FAA approved training curricula can address the human performance limitations of a relatively simple visual inspection task when the training that maintenance personnel receive fails to address the basic skills they will be expected to perform on the job. The Safety Board believes that the FAA should examine the regulations governing the certification of aviation maintenance technican schools and the licensure of airframe and powerplant mechanics and revise the regulations to address contemporary developments in airplane maintenance.

Another area of Safety Board concern arises from the fact that there are no FAA requirements for formal training or licensing of NDI personnel. The Safety Board is aware that the United Kingdom Civil Aviation Authorities and those in other countries have formally recognized the importance of NDI skills and have required in-depth training, skill demonstration, licensing and recurrent certification of NDI personnel. While NDI technology and techniques in some industries in the United States are quite advanced and personnel certification follows the American Society for Nondestructive Testing (ASNT) guidelines, the aviation industry has not applied such advanced techniques or practices. For instance, in the current environment any mechanic, including those designated as inspectors, could be assigned to perform detailed and critical NDI inspections on airplanes with little or no training and with tools that have not been technologically improved for some time.

Because of its criticality and complexity, the Safety Board believes that the NDI maintenance function should be reviewed by the FAA with a view towards requiring formal training, skill demonstration, apprenticeships, and formal licensing and recurrent certificaton for NDI inspectors.

Selection of inspection personnel was another issue raised during the investigation of this accident. The concern was expressed about what kinds of characteristics are appropriate to consider when selecting persons to perform an obviously tedious, repetitive task such as a protracted NDI inspection. Inspectors normally come up through the seniority ranks. If they have the desire, knowledge and skills, they bid on the position and are selected for the inspector job on that basis. However, to ask a technically knowledgeable person to perform an obviously tedious and exceedingly boring task, rather than to have him supervise the quality of the task, may not be an appropriate use of personnel; persons who have demonstrated a capability to move up to supervisory duties may not necessarily perform well at repetitive tasks. In light of the critical importance of the maintenance inspection task, as demonstrated by this accident, the Safety Board believes that the FAA should sponsor, as part of its recently initiated human factors program on this subject, research to determine suitable means for use by air carriers in selecting inspector candidates.

Finally, the Safety Board is concerned that nondestructive inspections in the aviation industry involve inspection methods that are substantially dependent on human beings performing repetitive and detailed tasks. The Safety Board believes that research is needed to improve upon the methods presently used to examine very large areas or perform a very large number of similar repetitive actions to find very small defects. Inspections of aviation structures involving large areas or numerous repetitive actions should be automated to the extent possible, or other techniques developed to eliminate or minimize the potential errors inherent in human performance of such tasks.

2.4.2 Aloha Airlines Corrosion Control

The policies, procedures, and organization of Aloha Airlines aircraft maintenance and inspection program significantly affected the control of corrosion on its airplanes. According to airplane maintenance records, lap joint and other areas of corrosion were detected, but corrective action was frequently deferred without recording the basis for such deferrals. Routine inspection task cards contained the "check for corrosion" instruction for specific areas; however, a programatic approach to corrosion prevention and control of the whole airplane was not evident. It appears that even when Aloha Airlines personnel observed corrosion in the lap joints and tear straps, the significance of the damage and its criticality to lap joint integrity, tear strap function, and overall airplane airworthiness was not recognized by the Aloha Airlines inspectors and maintenance managers. This was particularly noteworthy when one considers that Aloha Airlines indicated that SB737-53-1039, Revision 2 (1974), was incorporated in their maintenance plan. The overall condition of the Aloha Airlines fleet indicated that pilots and line maintenance personnel came to accept the classic signs of on-going corrosion damage as a normal operating condition.

The Safety Board was also concerned about the uncommanded shutdown of the left engine during the accident sequence. The left engine fuel control was found in the "cutoff" position; the control apparently was positioned there by the residual tension in the intact cable or motion of that cable induced by the cabin floor deflection since the cables are routed through cutouts in the floor beams.

Since the point of maximum upward floor deflection (hence maximum cable deflection) was at BS 440 in the cabin, the actual location of the throttle cable failures (in the wing leading edge) seemed an unlikely one. Additionally, the broken cable ends lacked the unraveling that is characteristic of cables that fail in tension overload. When the appropriate cable sections were removed from the airplane and inspected more closely, there were indications of corrosion. These observations were confirmed by laboratory examination which concluded that the diameters of many of the individual wires that comprise the cables had been reduced significantly by corrosion damage. This corrosion likely weakened the cables so that they separated at a lower than designed load when placed in tension by the displacement of the left side floor beams. The cables of the right engine also exhibited extensive surface corrosion where they were routed through the leading edge of the wing. These cables may have remained intact during the

separation sequence only because of the much smaller amount of floor beam deflection that occurred on the right side of the cabin.

The damage to the throttle cables appears much the same as the type of corrosion described in Boeing Service Letter (SL) 737-SL-76-2-A issued on August 25, 1977. This SL was issued as a result of the discovery by Aloha Airlines that a carbon steel thrust control cable had corroded and frayed. Only five of the seven strands of the cable were reported intact. The remaining five strands were also corroded, and the corrosion was present on the entire length of that portion of the cable routed through the wing leading edge.

The Boeing recommended action following this discovery was to replace the carbon steel engine control cables with corrosion resistant stainless steel cables on the production line beginning with production line number 503 which was delivered in September 1977. Boeing recommended that operators of existing airplanes replace the original carbon steel cables on production line numbers 1 through 502 as required. At this date, the number of aircraft modified in accordance with the applicable SL has not been established accurately. Laboratory examination of the separated cables from N73711 confirmed that they were the original carbon steel type. The Safety Board is concerned that Aloha Airlines did not take advantage of the manufacturer's corrective action for these cables, especially in light of their initial discovery of the problem and recognition of their own harsh operating environment.

The record establishes that corrosion problems were detected by Aloha maintenance personnel and, on occasion, repairs were deferred without a full evaluation by management of the airworthiness implications or appropriate reference to the structural repair manual. This leads the Safety Board to conclude that economic considerations, a lack of structural understanding, airplane utilization, and the lack of spare airplanes were factors which may have induced Aloha Airlines to allow these deferrals.

2.4.3 Engineering Services

At the time of the accident, Aloha Airlines, like many small operators, did not have an engineering department. Some of the functions that are usually performed by engineers at large airlines were accomplished by Aloha Airlines Quality Assurance (QA) department.

The responsibilities of an airline engineering department generally include evaluating and implementing manufacturer's SBs and ADs, evaluating airplane accidental or corrosion damage, designing or evaluating repairs, establishing aircraft maintenance schedule specifications, and providing technical assistance to other areas of the airline. Another important aspect of engineering staff activities is the oversight of inspector performance and related quality assurance activites.

The condition of high cycle B-737's in the Aloha Airlines fleet with respect to lap joint corrosion, multiple repairs, and and detection of fatigue cracking is an example of what can occur in the absence of regular

and knowledgeable evaluations of aircraft condition by qualified engineering staff.

Aloha Airlines management could have recognized the importance of Alert SB 737-53A1039 in light of their own experience with the previous crack along the lap joint at S-10R and could have inspected all the lap joints called out in the referenced SB while they accomplished the requirements of AD 87-21-08. The same concept applies to the SL recommending replacement of engine control cables which were recognized by Aloha as susceptible to corrosion.

In addition, a qualified engineer should have interpreted the lap joint AD regarding the use of oversize protruding head fasteners in the event that fatigue damage was found. More importantly, a comprehensive structural engineering and maintenance program likely would have precluded the deteriorated condition of the airplanes by evaluating and implementing the appropriate corrosion control techniques and SBs, thus retaining company assets.

An additional area of concern to the Safety Board is the extent and number of skin repairs evident on the airplane and the effect that these repairs may have on the damage tolerance properties of the original design. The accident airplane had over two dozen fuselage repairs; the majority were skin repairs using doubler patches. This condition illustrates the extent to which aging airplanes may continue to be repaired (patched) in accordance with existing manufacturer's and FAA requirements.

A large repair or the cumulative effects of numerous small repairs can adversely impact the ability of the structure to contain damage to the extent necessary to meet fail-safe or damage tolerant regulations. Additionally, the structure underlying the repairs can be difficult if not impossible to inspect, which can be detrimental where fuselage lap joints are concerned. These types of evaluations are typically beyond the expertise of QA and maintenance departments and must be addressed by qualified engineering personnel.

The Safety Board believes that the continued airworthiness of airplanes as they age would be enhanced by including qualified engineers in the operator's organization. While the Safety Board recognizes that situation may be economically unrealistic for all operators, it believes that an equivalent level of safety can be achieved only by using engineering representatives from some other source. Qualified engineers could evaluate service information and airworthiness directives with particular respect to the fleet aircraft and operating conditions. The assistance of these qualified engineers may be available through an industry group or the manufacturer. The Safety Board, therefore, recommends that the FAA require airline operators that do not have a functioning engineering department to maintain a formal alternative to provide engineering services.

In summary, the Safety Board believes that the Aloha Airlines maintenance department did not have sufficient manpower, the technical

knowledge, or the required programs to meet its responsibility to ensure the continued structural integrity of its airplanes.

2.5 FAA Responsibilities

2.5.1 Issuance and Clarity of Airworthiness Directives

In-service fatigue cracking in a disbonded area of a B-737 lap joint was first reported in 1984 (by Aloha Airlines). Then in April 1987, a foreign operator reported several cases within his fleet. Boeing acted by revising the existing lap joint disbond information, SB 737-53-1039, Revision 2 (which had advised that prolonged operation with disbonded areas would result in fatigue cracks), upgrading the SB to Alert status, and notifying the FAA. In October 1987, multiple site cracking was discovered during the manufacturer's continued fatigue testing of a B-737 aft body section. Within the same time frame, the FAA issued AD 87-21-08 which required mandatory inspection for fatigue cracking.

The Safety Board considers it unfortunate that the Boeing Alert SB to inspect all lap joints was not issued after the first instance of cracking, and that the intent of the Alert SB was altered significantly by the FAA to reduce the scope of the inspection when the AD was released. The Safety Board believes that had a full inspection of all lap joints been mandated, the likelihood of this accident occurring may have been reduced. Therefore, the limited AD requirements imposed by the FAA precluded the continuing airworthiness of the aging B-737s and the reduced inspection criteria is considered a contributing factor to the cause of this accident.

When Aloha Airlines accomplished the inspections and repairs associated with the AD, they omitted inspections of lap joints other than those along S-4 and they did not replace the remaining fasteners in the upper row of the S-4R lap joint with protruding head rivets, as outlined in Boeing ASB 737-53A1039. The AD pertaining to the lap joint inspections states, in part:

> Repair all cracks and tearstrap delaminations found as a result of the above inspections prior to further flight in accordance with Boeing Alert Service Bulletin 737-53A109, Revision 3, Dated August 20, or later FAA-approved revisions.

The appropriate section of the ASB states, in part:

> Repair fatigue cracks using a repair similar to that shown in 737 Structural Repair Manual Subject 53-30-3, Figure 16, and replace all remaining upper row flush joint-fasteners in that panel joint with oversized protruding head solid fasteners per Part IV - Repair Data.

While operators have interpreted the repair instructions listed in the AD note as requiring the installation of the protruding head rivets as a part of the repair, the FAA personnel stated that its intent was to have protruding head fasteners installed throughout the skin panel joint where cracking was found.

Repairs of the S-4 joint by Aloha Airlines were accomplished using the procedure in the Structural Repair Manual and excluded replacing the remaining flush joint-fastners. The Safety Board believes that the instructions contained in the AD were inexact and subject to misinterpretation.

Such confusion illustrates the difficulty inherent in attempting to present technical information so that it can be interpreted properly by the users of the information. In the case of this AD, it is believed that the repair instructions could have been presented more explicity. This was, in fact, done in subsequent ADs pertaining to the same subject.

The Safety Board is satisfied that the terminating action for the disbonding of B-737 lap joints and tear straps requiring replacement of the upper rivet row is an effective measure to correct this recognized B-737 deficiency.

However, laboratory examination of the S-4R lap joint sample from the accident airplane revealed another area of concern with early line number B-737 airplanes. Fatigue cracks were found emanating from the fastener holes of a significant number of rivets in the middle row of the lap joint. The Safety Board is concerned that because of the extended lifetime of the B-737 afforded by the terminating action mandated for the upper rivet row, the lower rivet row on the inner (lower) skin panel eventually will be a location for fatigue cracks to develop. These cracks, if they occur, cannot be detected externally by visual means since they are covered by the outer skin panel. The FAA and Boeing should continue to evaluate the early model B-737 airplanes to determine the types of inspections, inspection intervals, and corrective actions to be instituted if a significant fatigue cracking problem develops in the middle and lower row of lap joint fasteners.

2.5.2 Needed Research on Corrosion Control and NDI

While it is the responsibility of the operator to develop and implement a proper and complete maintenance program applicable to the operating environment, the Safety Board believes that the FAA should define acceptable corrosion control program parameters and provide them as a guide for both the operator and the PMI. The Safety Board believes that an operator's comprehensive corrosion control program, fully supported by the manufacturer and enforced by the FAA, is a critical and necessary step in the continued airworthiness of an aging airplane fleet.

The Safety Board also believes that the FAA should assume the lead role in encouraging further research into improved corrosion detection and prevention methods. Many areas of an airplane are difficult to inspect for corrosion. For example, within lap joints, the corrosion can go undetected

until it is so severe that the damage is evident visibly from the condition of the outer skin. There have been various experiments on NDT inspection methods but none have proved effective in all cases. The NDT equipment manufacturers appear able to supply very technical equipment to other industries; however, in the aviaton industry, neither the most technically advanced and automated equipment nor the human factors involved in using such equipment effectively have been pursued thoroughly. The FAA and aircraft maintenance interests should challenge the NDT equipment manufacturers with the specific needs for the aviation industry in order to develop improved, economical, state-of-the-art equipment and to employ methods which minimize human performance inadequacies.

Even though the corrosion problems with the carbon steel engine control cables have been known for quite some time, the Safety Board believes that it would be beneficial to once again address this area in light of the cable condition on the accident airplane and the fact that some portions of the cables can be difficult to inspect. The Safety Board believes that the FAA should issue an Airworthiness Directive to the operators of the affected B-737 airplanes advising them of the corrosion potential of carbon steel engine control cables and directing them to the information contained in 737-SL-76-2-A regarding cable replacement.

2.5.3 FAA Oversight

The Safety Board has issued numerous safety recommendations pertaining to the surveillance of air carrier maintenance by the FAA. Generally, these safety recommendations have addressed maintenance problems with specific aircraft, revisions to manuals, and accident or special study identified areas for surveillance program improvement. After the Aloha Airlines accident, the Safety Board probed deeper into the FAA's surveillance program, including NASIP. The investigation and analysis of the accident revealed several areas of concern including staffing levels and FAA philosophy regarding maintenance surveillance.

The investigation has revealed that staffing levels in some FSDOs are insufficient. The PMI responsible for Aloha Airlines indicated that he was also assigned as the PMI for nine other operators and seven repair stations throughout the Pacific rim area. He also was assigned out of his geographic area of responsibility to participate in a NASIP inspection. The Safety Board believes that the PMI's workload was too extensive for him to be adequately effective.

As a result of the FAA sponsored Safety Activity Functional Evaluation (Project SAFE) in 1984, the FAA Flight Standards System is now in a 5-year program to improve inspection guidance, field surveillance, and standardization. The FAA has been allocated additional hiring authority and funds to increase the number of air carrier inspectors. While additional personnel will improve the staffing situation, the Safety Board is concerned about the qualifications of the newly hired inspectors and the training of the inspector force. Because there are a limited number of candidates who have extensive air carrier backgrounds, the FAA has had to hire people with general aviation or military backgrounds or transfer inspectors from general

aviation assigments. As a result, the new inspectors are not fully familiar with air carrier maintenance programs and practices. Although the FAA provides a 6-week indoctrination for the new inspectors, it requires several years of on-the-job experience to make the inspectors most effective. Then they progress on a career path that leads toward being appointed as a PMI. There is no specific formal training course for PMIs. Additionally, recurrent training is sporadic and difficult to attain, resulting in a work force that must try very hard to stay ahead of the operators and quickly advancing aircraft technology.

Increased FAA inspector staffing levels should help with the manpower requirements necessary to review paperwork that ensures that airlines have complied with Federal regulations. However, without proper FAA inspection of actual airplane condition, less responsible or knowledgeable operators can operate airplanes of dubious structural and mechanical integrity. The paperwork review system has become so entrenched in FAA inspections that an alteration of philosophy is required to create an effective maintenance surveillance program.

The Safety Board sought to identify existing boundaries of responsibility of the PMI regarding regulatory compliance and the level of maintenance quality demonstrated by the assigned air carrier. Evidence of accountability of the PMI and district office for the performance of the assigned carrier(s) was not apparent. Evidence suggests that FAA surveillance and inspection programs are directed toward the air carrier, and the in-house evaluation of PMI performance is oriented toward quantity of work and the ability to handle approvals smoothly and directly. The Safety Board is concerned that the PMI has the authority to approve critical areas of air carrier maintenance programs without being held responsible for those approvals. There does not appear to be an effective method in place for FAA management to make recurring qualitative assessments of PMI approvals.

Followup of the NASIP findings is also indicative of a lack of PMI accountability. The negative findings of an airline maintenance program are placed into the oversight of the PMI to promote and monitor corrective action. That is, a negative situation may occur under the jurisdiction and surveillance of a PMI and yet he is responsible to evaluate and followup on corrective action. Therefore, the accountability for the on-going quality of the PMIs work performance does not appear to exist.

It appears that the current surveillance system can lead to "rubber stamp" approvals and endorsement of an air carrier's operations and maintenance programs. Improvements are needed to encourage and support the PMI's efforts to secure compliance and to promote upgraded levels of performance by the assigned air carrier in both safety and reliability areas. Without such improvements, the system of program approval can be driven by the momentum and interests of the air carrier. It appears the present system is sustained by the personal integrity and dedication of the concerned FAA inspector personnel rather than by an FAA system that includes adequate oversight and internal review. With the current environment, only the most motivated PMIs will maintain their sense of responsibility to ensure maximum efficiency and safety. The Safety Board recognizes the need for increased

FAA management emphasis on the accountability of a PMI's performance. Both regional and headquarters Flight Standards staff should become more involved in assessing and ensuring PMI accountability.

In addition, there is also a need for a program of standardized approvals of air carrier maintenance programs to promote a uniform and acceptable level of safety performance in the current competitive air carrier industry. The Safety Board believes that the authority of the PMI for approval of airlines procedures and operations specifications can be better guided, and overall PMI performance improved, if definitive Flight Standards criteria are provided to those in the field.

The FAA management's primary tool for overseeing surveillance by the inspector work force, WPMS, requires inspectors to enter the number, type, and results of inspections performed into a computer. During Safety Board interviews, inspectors have expressed concern that this system creates administrative requirements to the detriment of the time available for performing their surveillance responsibilities. The Safety Board recognizes that FAA management requires the data for their workload and personnel management systems and that the information is used to ensure that inspectors perform the required inspections. However, at present, the information plays only a limited part to enhance the quality of airline surveillance. The Safety Board suggests that further improvements can be made to streamline the system and perhaps to gain more qualitative information about both the carrier and the PMI surveillance.

The Safety Board also investigated the effectiveness of the NASIP after the Aloha Airlines accident. A NASIP inspection had been performed at Aloha Airlines in December 1987 and none of the findings and corrective actions addressed airplane structural maintenance. In fact, NASIP looked chiefly at manuals and records with a minimal effort expended to the condition of the fleet. A month earlier, Boeing had performed a maintenance evaluation of the carrier at Aloha Airlines' request. Boeing found several areas of concern including the deteriorated structural condition of the Aloha Airlines' high-cycle airplanes and Aloha Airlines' immediate need for a structures engineer. The Boeing inspection provided a convenient yardstick by which the effectiveness of the NASIP effort can be measured. The Boeing effort concentrated initially on the actual condition of the airplanes, and then it reviewed the paperwork to find out why the maintenance program had resulted in the airplane deterioration. The Safety Board concluded that there are inadequacies in the NASIP objectives and methodology which require a change in the current philosophy of FAA surveillance to include added inspection of fleet airplane condition.

The Safety Board also believes that routine surveillance and the NASIP concept should be adjusted toward a more "safety-oriented" qualitative program to complement the current "Federal regulation compliance" approach. That is, under the current philosophy, the FAA examines airline records for compliance with regulations, and some negative findings (violations) result in enforcement actions for which there are clear guidelines. However, many negative findings are "nonregulatory" matters for which both the local PMIs and the NASIP teams believe corrective actions should be taken. In the

preamble to the 1987 NASIP report of Aloha Airlines, the FAA team stated, "Aloha Airlines' Maintenance Management has been remiss in their responsibilities by not being able to recognize their own deficiencies, as this report will indicate." "Responsibilities" apparently refers to regulations under which Aloha Airlines is charged with maintaining its airplane in an airworthy condition (FAR 121.363). "Deficiencies" in this case apparently refers to items which the FAA believes Aloha Airlines should correct to operate safely. There was no national FAA program to evaluate and verify the quality of the corrective actions, nor to determine the timeliness of such actions. For example, the NASIP team found that Aloha Airlines "...does not have an effective internal audit program." Although FAR 121.373 "Continuing analysis and surveillance" addresses an air carrier's responsibility to maintain a system for continuing analysis and surveillance of its inspection and maintenance programs, the FAA NASIP inspectors apparently concluded that the regulation was too subjective to use as a basis for enforcement action to assure that Aloha Airlines corrected deficiencies in their internal audit program.

Technically, as stated by the FAA, if an airline complies with the regulations, it is "safe." However, many regulations are subjective in nature and are subject to interpretation. Consequently, even with several significant negative findings by a NASIP team, as was the case with Aloha Airlines, the airline was allowed to continue operations without making immediate changes and without having to set deadlines for completion on recommended actions. In fact, the oversight and closeout of corrective actions suggested by the NASIP team were left to the Aloha Airlines PMI, under whose jurisdiction and routine surveillance the discrepancies had been allowed to exist.

Some negative findings of the FAA NASIP team were similar in nature to the findings of the Boeing team that evaluated Aloha Airlines maintenance program in November 1987 and the "aging fleet" survey team that visited Aloha Airlines in January 1988. Although several corrective actions were taken by Aloha Airlines in early 1988 and several others were in process at the time of the accident, Aloha Airlines continued flight operations uninterrupted during this period, despite the negative nature of many of these findings.

The Safety Board is concerned that an airline that is charged by regulation to conduct operations in a certain manner can be found in noncompliance with the intent of the regulations and yet, it can continue commercial flight operations without substantive interruption or corrective actions taken. If an airline is either unable or unwilling to develop and maintain an effective maintenance and inspection program, the current FAA oversight philosophy will not prevent deficiencies from occurring, and it will not verify that substantive and timely corrective actions have been taken. Furthermore, the FAA did not intend to actually "inspect" Aloha Airlines fleet to verify if the airplanes were, in fact, safe. The findings of the Safety Board following the accident of N73711, regarding the quality of Aloha Airlines maintenance program, suggests that the FAA routine and special inspection programs were not effective in verifying that the airplanes were maintained in a safe, airworthy condition.

2.6 Boeing

2.6.1. Boeing 737 Certification

While the initial certification of the B-737 conformed to existing regulatory requirements, the accelerated fatigue testing schedule did not compensate for the in-service environmental effects on the bonded lap joints or tear straps. The inadequacy of the testing schedule was due in part to the state-of-the-art of laboratory bonding verification testing which had not yet discovered the problem of long term bond durability. The bond production problems did not become known until several years after the airplane went into service. It appears that Boeing addressed this problem swiftly thereafter by issuing SBs, improving the bonding process, conducting additional fatigue testing, and ultimately eliminating the cold-bond method and redesigning the lap joint.

At the time of the initial certification of the B-737, a consideration for MSD was not a part of the certification requirements, nor is it required now. This is demonstrated by the fact that there is no specific FAA requirement for full-scale fatigue testing to multiple projected service lifetimes of an airplane. Boeing attempted to assure fatigue life by testing the representative half fuselage section to two lifetimes. However, the durability of the lap joint cold bond appears to be the governing factor producing multiple site fatigue cracking in the B-737 lap joints. The Safety Board believes that the Boeing fatigue tests of the fuselage to two lifetimes did not generate fatigue cracking, probably because the lap joint and tear strap bonds on the test article were initially of good quality. Nonetheless, the Safety Board believes in light of the increased knowledge of and concern for the occurrence of MSD, the difficulties that may be encountered in detecting this type of damage and the catastrophic failure that may result from such damage, full-scale fatigue testing to a minimum of two projected service lifetimes should be required for certification of new designs.

The Safety Board believes that full-scale fatigue testing obviously is not a substitute for a comprehensive structural inspection program throughout the airplane's service life. The effectiveness of these inspection programs as the airplane ages would be enhanced by the early identification of areas where MSD does occur and incorporation of the necessary preventive design changes so that MSD is not a significant factor during the airplane's operating lifetime.

The Safety Board is also concerned about other Boeing transports, including some B-727 and early B-747 airplanes, that utilize the cold bond construction. The Safety Board recognizes that the design of B-727 and B-747 airplanes is less susceptible to fatigue cracking problems in the lap joints as early in the service life as those that arose in the B-737 fleet. However, a significant number of these airplanes are being used beyond the economic service life predicted by the manufacturer. The approach to fatigue testing for the early B-727 and B-747 airplanes was similar to that performed during the B-737 certification in that it did not include the possibility of in service lap joint disbonding. Additionally, although the entire airplane was tested in each case, only one service life objective was

achieved. As a result, the onset point of widespread cracking may not be known. The Safety Board believes that once airplanes of each particular type approach their economic service life, that in-depth analyses are necessary to verify the continued airworthiness of these airplanes. Therefore, the Safety Board believes that the FAA should require all U.S. currently certificated turbojet transport category airplanes, and those airplanes certificated in the future, receive full scale structural fatigue testing to a minimum of two times the projected economic service life.

2.6.2 Boeing Structures Classification

The Supplemental Structural Inspection Programs (SSIPs) mandated by the FAA vary by concept and implementation from manufacturer to manufacturer and from model to model. As Boeing devised the SSIP for their existing certificated airplanes, a structural classification system determined which SSIs are included in the supplemental inspections. Because Boeing defined the fuselage skin as "damage obvious or malfuction evident" if it cracks, the fuselage skin was excluded from directed supplemental inspection. Other manufacturers use different criteria and include primary fuselage structure and skin in the structural inspection program.

Boeing believes that their current FAA approved inspection program is adequate for detecting lead cracks resulting from MSD before the damage becomes critical. However, the Aloha Airlines accident illustrates that it is possible to have enough undetected (but technically detectable) damage along a rivet line to negate the controlled decompression mechanism.

The Safety Board recommends that the classification of fuselage minimum gage skin as damage obvious be discontinued and the affected SSIPs be revised accordingly. Additionally, all of the remaining SSIs in the damage obvious category should be reviewed in light of the recent approach for possible inclusion in the SSIP.

2.6.3 Boeing Visits to Aloha Airlines

When Boeing visited Aloha Airlines as part of its Aging Fleet Evaluation Program, it expressed concern about the deteriorated condition of the surveyed airplanes (N73711 was not included in the survey). Although Boeing did not inform Aloha Airlines that the airplanes were unsafe, Boeing believed that they made it clear that an unsafe condition could result if corrective action was not taken.

While responsibility for determining the operational airworthiness of the aircraft rests primarily with the operator, both the manufacturer and the FAA have a responsibility to verify that conditions do not appear that lead to the loss of continuing airworthiness. Both the manufacturer and the FAA participate in the process with initial certification action, operations specifications approval and continuing maintenance guidance and recommendations to assist the operator to maintain an airworthy fleet.

The Safety Board agrees that it is important to maintain communication between the manufacturer and the operator. The manufacturers

require information about airplane performance and conditions in service in order to resolve difficulties and provide corrective actions to operators. Evaluations by the FAA of the condition of airplanes to verify regulatory compliance and enforcement should be performed as an independent oversight measure to ensure that the operator/manufacturer exchange continues. When Boeing prevented the Aloha Airlines PMI from attending a meeting at which Boeing presented the results of its evaluation, Boeing stated that it was motivated by a corporate concern to preserve the privacy of communication between operators and the manufacturer.

Manufacturers should maintain private customer contacts but they must reserve the option to notify the FAA regarding the aspects of air safety of any individual operator should such a need arise. Boeing did not inform the FAA of the condition of the Aloha Airlines airplanes, nor was it required to by regulation. Boeing determined that an unsafe condition "could develop" in the Aloha Airlines airplanes that were surveyed if corrective actions were not taken and preferred to discuss the findings exclusively with Aloha Airlines.

Title 14 CFR 21.3, "Reporting of Failures, Malfunctions, and Defects," is intended to ensure that the FAA becomes aware of service difficulties that are not reported through the existing service difficulty system. The lap joint and tear strap corrosion and potential fatigue cracking problems were well known and corrective action was being formulated. The Safety Board recognizes that although Boeing had no regulatory obligation to report the findings of their survey of Aloha Airlines to the FAA, the Safety Board considers it a potential benefit to report such information. Therefore, the Safety Board believes that the FAA should evaluate the safety benefits that may be gained from manufacturer's survey information, such as aging aircraft reports, and take appropriate measures to ensure such data remain accessible to the appropriate authorities. The FAA's evaluation should lead to more explicit criteria and guidelines to operators and manufacturers about what information should be reported to the FAA under the provisions of 14 CFR 21.3.

2.7 Operational Considerations

The magnitude of the accident was well beyond any anticipated emergency scenario. The flightcrew's actions were consistent with simulator training situations which minimize the exposure to physiological effects. The flightcrew's success in managing the multiple emergency situations and recovering the aircraft to a safe landing speaks well of their training and airmanship.

The cabin crew also performed in a highly commendable manner when faced with a totally unpredicted event. Their bravery in moving about to reassure the passengers and prepare them for landing was exemplary.

The Safety Board reviewed three operational areas: assessment of in-flight structural damage; air/ground emergency communications; and emergency ambulance response.

It was apparent from crew interviews and the FDR that a rapid descent was initiated shortly after the explosive decompression. The Safety Board notes that speed brakes and 280 to 290 KIAS were used without first assuring the structural integrity of the airplane (the cockpit door was missing and sky was visible overhead). The IAS used in the descent, although it minimized the time at altitude, increased the maneuvering loads and subjected the passengers to flailing and windburn from the effect of exposure. The open fuselage break was also subjected to high dynamic pressure from the wind force.

The Operators Manual, Emergency Descent procedure (and emergency checklist) states that if structural integrity is in doubt, "limit airspeed as much as possible and avoid high maneuvering loads." The Safety Board considers that evaluation of the structural integrity and techniques of emergency descent (target airspeed, configuration changes, and maneuvering loads) can be critical to the success of further flight. The Safety Board therefore suggests that the FAA issue an Air Carrier Operations Bulletin (ACOB) to review the accident scenario and reiterate the need to assess airplane airworthiness as stated in the operators manual before taking any action that may cause further damage or the breakup of a damaged airframe.

In the course of this accident, ATC changed frequency for primary radio contact with the airplane during the emergency. Flight 234 was transmitting transponder emergency code 7700 and after some difficulty, the crew established contact with Maui Tower; Maui Tower was initially not apprised of the full nature of the emergency or the structural damage. After notification of the emergency, ATC directed a frequency change to Maui approach control. Later, flight 243 contacted Maui Tower for landing. The Safety Board recognizes the requirement for such frequency changes during normal operations; however, Maui Tower received both the emergency transponder code and confirmation of a pressurization emergency before their instructions to change frequency.

The Safety Board wishes to reiterate that ATC must make every effort to minimize the workload of a crew during an emergency. Further, an error during the handoff could result in lost communications and a possible loss of positive traffic control of the emergency aircraft.

The Safety Board is also concerned about the circumstances surrounding the ambulance response at the Maui airport. Had the ambulance service been notified earlier by the control tower and been waiting at the airport when the airplane landed, the seriously injured passengers could have been treated and transported to the hospital 13 minutes sooner. It is incumbent on those persons making a judgement for notification of emergency services to be aware of the circumstances and possibilities of each scenario.

3. CONCLUSIONS

3.1 Findings

1. The flightcrew was certificated and qualified for the flight and the airplane was dispatched in accordance with company procedures and Federal regulations.

2. Weather was not a factor in this accident.

3. Although Aloha Airlines operated according to the FAA operating certificate and operations specifications, the quality of Aloha Airlines maintenance and inspection program was deficient.

4. There was no evidence of preexisting failure or malfunction of the airplane's air conditioning, pressurization, pneumatic, or electrical systems that could have contributed to the fuselage failure.

5. The flightcrew's use of a target speed of 280-290 KIAS and speedbrakes in the descent after the structural separation indicated they did not consider the appropriate emergency descent checklist which states, in part, that if structural integrity is in doubt, airspeed should be limited as much as possible and high maneuvering loads should be avoided.

6. The left engine became inoperative because the engine control cables separated due to an increase in cable tension caused by cabin floor deformation, coupled with corrosion found in the area of cable separation.

7. The fuselage failure initiated in the lap joint along S-10L; the failure mechanism was a result of multiple site fatigue cracking of the skin adjacent to rivet holes along the lap joint upper rivet row and tear strap disbond which negated the fail-safe characteristics of the fuselage.

8. The fatigue cracking initiated from the knife edge associated with the countersunk lap joint rivet holes; the knife edge concentrated stresses that were transferred through the rivets because of lap joint disbonding.

9. The disbonding of lap joints and tear straps originated from manufacturing difficulties encountered with surface preparation and/or bond material processing during the construction of the airplane which resulted in lap joint bonds with low environmental durability or a lack of bonding.

10. Although a representative fuselage section of a Boeing 737 was tested to 150,000 cycles during certification, the test did not reflect the fatigue performance of the actual fleet

aircraft because the test parameters did not consider the long term effects of disbonding, corrosion, and fatigue cracking in the lap joints as experienced in airline service.

11. Disbonding of B-737 lap joints, with resulting corrosion and probable fatigue cracking, was explicitly defined in Boeing Service Bulletin 737-53-1039, Revision 2 dated February 8, 1974; however the serious implications of multiple site damage were not realized, a permanent solution was not determined, and corrective action was relegated to repetitive visual inspections and damage repair.

12. There was sufficient information available to Aloha Airlines to alert it to the cracking problems associated with the deterioration of lap joint bonds, and Aloha should have followed a maintenance program to detect and repair cracking before it reached a critical condition.

13. FAA AD 87-21-08 should have mandated inspection of all lap joints per Boeing ASB 737-53A1039, Revision 3, instead of limiting the inspection of only the lap joints at S-4.

14. It was not determined whether Aloha Airlines actually performed the required eddy current inspection in compliance with AD 87-21-08 or whether it was performed ineffectively.

15. A properly conducted eddy current inspection, performed in accordance with AD-87-21-08 in November 1987, would have detected additional fatigue cracks in the holes of the upper rivet row of the lap joint along S-4R.

16. FAA licensed Aircraft and Powerplant mechanics are not required to be knowledgeable in the maintenance and inspection of modern contemporary airplanes because the training curriculum has not kept pace with aviation industry technology.

17. There are human factors issues associated with visual and nondestructive inspection which can degrade inspector performance to the extent that theoretically detectable damage is overlooked.

18. Aloha Airlines management failed to recognize the human performance factors of inspection and to fully motivate and focus their inspector force toward the critical nature of lap joint inspection, corrosion control and crack detection. However, reports of fleet-wide cracks received by the FAA after the Aloha Airlines accident indicate that a similar lack of critical attention to lap joint inspection and fatigue crack detection was an industry-wide deficiency.

19. Because of the inexact instructions in AD 87-21-08, Aloha Airlines maintenance personnel did not replace the S-4R lap joint upper row countersunk rivets with protruding head rivets.

20. The NASIP inspection of Aloha Airlines in December 1987 did not reflect accurately the airworthiness of the operating fleet because the team failed to inspect adequately and report the physical condition of the fleet.

21. The PMI assigned to Aloha Airlines, although motivated toward his FAA surveillance tasks, was overburdened with other FSDO responsibilities and not suitably informed about the age and condition of the Aloha fleet or the nature of the Aloha operations. He was therefore unable to provide sufficient impetus to effect necessary timely improvements in the Aloha Airlines maintenance program.

22. The PMI was not specifically trained to deal with the lap joint corrosion and disbonding problems of the B-737. His efficiency was further eroded when he was excluded from the informational loop regarding Boeing aging aircraft inspections of Aloha airplanes and not apprised of the program between the FAA Aircraft Certification Service and Boeing regarding structural testing of an in-service airplane.

23. Principal Inspectors have difficulty initiating safety improvements in air carrier operations and maintenance programs outside the "regulatory compliance" approach, and they must resort to salesmanship and persuasion unless an enforcement is clearly viable.

24. The Boeing SSIP did not include supplemental inspections on the fuselage minimum gage skin due to damage tolerant design which was classified as "damage obvious" or "malfunction evident" because of the controlled decompression scenario.

25. The aviation industry premise that airplanes can be operated in a safe airworthiness condition indefinitely is sound only if operators have an effective inspection, corrosion control, and damage repair program.

26. The current FAA and industry activities to address the aging airplane issue must be continued to prevent accidents caused by structural failure.

3.2 Probable Cause

The National Transportation Safety Board determines that the probable cause of this accident was the failure of the Aloha Airlines maintenance program to detect the presence of significant disbonding and fatigue damage which ultimately led to failure of the lap joint at S-10L and

the separation of the fuselage upper lobe. Contributing to the accident were the failure of Aloha Airlines management to supervise properly its maintenance force; the failure of the FAA to evaluate properly the Aloha Airlines maintenance program and to assess the airline's inspection and quality control deficiencies; the failure of the FAA to require Airworthiness Directive 87-21-08 inspection of all the lap joints proposed by Boeing Alert Service Bulletin SB 737-53A1039; and, the lack of a complete terminating action (neither generated by Boeing nor required by the FAA) after the discovery of early production difficulties in the B-737 cold bond lap joint which resulted in low bond durability, corrosion, and premature fatigue cracking.

4. RECOMMENDATIONS

As a result of its investigation of this accident, the National Transportation Safety Board made the following safety recommendations:

--to the Federal Aviation Administration:

Provide specific guidance and proper engineering support to Principal Maintenance Inspectors to evaluate modifications of airline maintenance programs and operations specifications which propose segmenting major maintence inspections. (Class II, Priority Action) (A-89-53)

Identify operators whose airplane use differs significantly from the flight cycle versus flight time relationship upon which the Maintenance Planning Document was predicated, and verify that their maintenance programs provide timely detection of both cycle and time related deficiencies. (Class II, Priority Action) (A-89-54)

Revise the regulations governing the certification of aviation maintenance technician schools and the licensing of airframe and powerplant mechanics to require that the curriculum and testing requirements include modern aviation industry technology. (Class II, Priority Action) (A-89-55)

Require formal certification and recurrent training of aviation maintenance inspectors performing nondestructive inspection functions. Formal training should include apprenticeship and periodic skill demonstration. (Class II, Priority Action) (A-89-56)

Require operators to provide specific training programs for maintenance and inspection personnel about the conditions under which visual inspections must be conducted. Require operators to

periodically test personnel on their ability to detect the defined defects. (Class II, Priority Action) (A-89-57)

Develop a continuing inspection program for those B-737 airplanes that have incorporated lap joint terminating action (protruding head solid fasteners installed in the upper row of all lap splices) to detect any fatigue cracking that may develop in the middle or lower rows of fuselage lap joint fastener holes (for both the inner and outer skin panels) or in the adjacent tear strap fastener holes, and define the types of inspections, inspection intervals, and corrective actions needed for continuing airworthiness. (Class II, Priority Action) (A-89-58)

Develop a model program for a comprehensive corrosion control program to be included in each operator's approved maintenance program. (Class II, Priority Action) (A-89-59)

Issue an Airworthiness Directive for B-737 airplanes equipped with carbon steel engine control cables to periodically inspect the cables for evidence of corrosion and if there is such evidence, to accomplish the actions set forth in Boeing Service Letter 737-SL-76-2-A. (Class II, Priority Action) (A-89-60)

Require that air carrier maintenance departments use the engineering services available from the manufacturer or other sources to periodically evaluate their maintenance practices including structural repair, compliance with airworthiness directives and service bulletins, performance of inspection and quality assurance sections and overall effectiveness of continuing airworthiness programs. (Class II, Priority Action) (A-89-61)

Revise the National Aviation Safety Inspection Program objectives to require that inspectors evaluate not only the paperwork trail, but also the actual condition of the fleet airplanes undergoing maintenance and on the operational ramp. (Class II, Priority Action) (A-89-62)

Require National Aviation Safety Inspection Program teams to indicate related systemic deficiencies within an operators maintenance activity when less than satisfactory fleet condition is identified. (Class II, Priority Action) (A-89-63)

Evaluate the quality of FAA surveillance provided by the principal inspectors as part of the National Aviation Safety Inspection Program. (Class II, Priority Action) (A-89-64)

Integrate the National Aviation Safety Inspection Program team leader in the closeout of the team findings. (Class II, Priority Action) (A-89-65)

Enhance the stature and performance of the principal inspectors through; (1) formal management training and guidance, (2) greater encouragement and backing by headquarters of efforts by principal inspectors to secure the implementation by carriers of levels of safety above the regulatory minimums, (3) improved accountability for the quality of the surveillance and (4) additional headquarters assistance in standardizing surveillance activities. (Class II, Priority Action) (A-89-66)

Require that all turbojet transport category airplanes certificated in the future, receive full scale structural fatigue testing to a minimum of two times the projected economic service life. Also require that all currently certificated turbojet transport category airplanes that have not been fatigue tested to two lifetimes, be subjected to such testing. As a result of this testing and subsequent inspection and analysis, require manufacturers to identify structure susceptible to multiple site damage and adopt inspection programs appropriate for the detection of such damage. (Class II, Priority Action) (A-89-67)

Discontinue classification of fuselage skin as "malfunction evident" or "damage obvious" on supplemental structural inspection documents. In addition, review all the remaining structurally significant items in the damage obvious category for possible inclusion in the Supplementary Inspection Program. (Class II, Priority Action) (A-89-68)

Issue an Air Carrier Operations Bulletin for all air carrier flight training departments to review the accident scenario and reiterate the need to assess airplane airworthiness as stated in the operators manual before taking action that may cause further damage or breakup of a damaged airframe. (Class II, Priority Action) (A-89-69)

Evaluate the quality of FAA surveillance provided by the principal inspectors as part of the National Aviation Safety Inspection Program. (Class II, Priority Action) (A-89-64)

Integrate the National Aviation Safety Inspection Program team leader in the closeout of the team findings. (Class II, Priority Action) (A-89-65)

Enhance the stature and performance of the principal inspectors through; (1) formal management training and guidance, (2) greater encouragement and backing by headquarters of efforts by principal inspectors to secure the implementation by carriers of levels of safety above the regulatory minimums, (3) improved accountability for the quality of the surveillance and (4) additional headquarters assistance in standardizing surveillance activities. (Class II, Priority Action) (A-89-66)

Require that all turbojet transport category airplanes certificated in the future, receive full scale structural fatigue testing to a minimum of two times the projected economic service life. Also require that all currently certificated turbojet transport category airplanes that have not been fatigue tested to two lifetimes, be subjected to such testing. As a result of this testing and subsequent inspection and analysis, require manufacturers to identify structure susceptible to multiple site damage and adopt inspection programs appropriate for the detection of such damage. (Class II, Priority Action) (A-89-67)

Discontinue classification of fuselage skin as "malfunction evident" or "damage obvious" on supplemental structural inspection documents. In addition, review all the remaining structurally significant items in the damage obvious category for possible inclusion in the Supplementary Inspection Program. (Class II, Priority Action) (A-89-68)

Issue an Air Carrier Operations Bulletin for all air carrier flight training departments to review the accident scenario and reiterate the need to assess airplane airworthiness as stated in the operators manual before taking action that may cause further damage or breakup of a damaged airframe. (Class II, Priority Action) (A-89-69)

--to Aloha Airlines:

Revise the maintenance program to recognize the high-time high cycles nature of the fleet operations and initiate maintenance inspection and overhaul concepts based on realistic and acceptable calendar and flight cycle intervals. (Class II, Priority Action) (A-89-70)

Initiate a corrosion prevention and control program designed to afford maximum protection from the effects of harsh operating environments (as defined by the airplane manufacturer). (Class II, Priority Action) (A-89-71)

Revise and upgrade the technical division manpower and organization to provide the necessary management, quality assurance, engineering, technical training and production personnel to maintain a high level of airworthiness of the fleet. (Class II, Priority Action) (A-89-72)

-- to the Air Transport Association:

Assist member air carriers to establish maintenance department engineering services to evaluate maintenance practices including structural repair, compliance with airworthiness directives and service bulletins, performance of inspection and quality assurance sections, and overall effectiveness of continuing airworthiness programs. (Class II, Priority Action) (A-89-73)

BY THE NATIONAL TRANSPORTATION SAFETY BOARD

/s/ James L. Kolstad
Acting Chairman

/s/ Jim Burnett
Member

/s/ John K. Lauber
Member

/s/ Joseph T. Nall
Member

/s/ Lemoine V. Dickinson, Jr.
Member

Joseph T. Nall, Member, filed the following concurring/dissenting statement:

While I concur with most of the majority's findings, I disagree with the probable cause and certain conclusions. Industry's best engineers reviewed the carrier's records, knew of its high-cycle operations, and even inspected some of Aloha's 737 fleet. No one--not Boeing, Aloha nor the FAA principal maintenance inspectors--recognized or predicted the critical nature of the multi-site cracking or that the aircraft hull was about to rupture. If a "failure" occurred, it was a system failure. Could those who designed, inspected or maintained the aircraft, given their knowledge at the time of the accident, have reasonably foreseen this accident was about to happen? I think not. I would have preferred to cite simply "the presence of undetected disbonding and fatigue cracking" as the probable cause. I agree with the majority that contributing to the failure to detect the hull defects were systems, programs or decisions of all the participants. But I emphasize these are simply contributing factors, not the probable cause of the accident.

The majority's probable cause is too narrow and I therefore cannot agree that Aloha's maintenance program was the probable cause of the accident. I would have supported the following probable cause:

The National Transportation Safety Board determines that the probable cause of this accident was the presence of undetected disbonding and fatigue cracking which led to the failure of the fuselage lap joint at S-10L.

Contributing to the accident were: the failure of Aloha Airlines management to supervise its maintenance force properly; the failure of the Federal Aviation Administration to assess the quality and effectiveness of the Aloha Airlines maintenance program; the failure of FAA Airworthiness Directive 87-21-08 to require inspection of all the lap joints as proposed by Boeing Alert Service Bulletin 737-53A1039; and the lack of a complete terminating action (neither generated by Boeing nor required by the FAA) after the discovery of difficulties in the early production B-737 cold bond lap joint.

/s/ Joseph T. Nall
Member

June 14, 1989

APPENDIXES

APPENDIX A

INVESTIGATION AND HEARING

1. Investigation

The Washington Headquarters of the National Transportation Safety Board was notified of the Aloha Airlines accident within a short time after the occurrence. A full investigation team departed Washington, DC at 0800 eastern daylight time the following morning and arrived in Maui 1400 Hawaiian standard time on the same day. The team was composed of the following investigative groups: Operations, Structures/Systems, Maintenance Records, Metallurgy, and Survival Factors. In addition, specialist reports were prepared to summarize findings relevant to the CVR and FDR.

Parties to the field investigation were Aloha Airlines, the FAA, the State of Hawaii Department of Transportation Airports Division, the Boeing Commercial Airplane Company, the Air Line Pilots Association, the International Association of Machinists, and the Association of Flight Attendants.

2. Public Hearing

A 4-day public hearing was held in Seattle, Washington, beginning on July 12, 1988. Parties represented at the hearing were the FAA, Aloha Airlines, Boeing Commercial Airplane Company, and the Air Line Pilots Association.

APPENDIX B

PERSONNEL INFORMATION

Captain Robert Lawrence Schornstheimer

Captain Robert L. Schornstheimer, 44, was hired by Aloha Airlines on May 31, 1977. The captain holds Airline Transport Pilot (ATP) Certificate No. 1958730 with airplane multiengine land ratings and commercial privileges in airplane single engine land. The captain is type rated in the Boeing 737. The captain was issued a First Class Medical Certificate on November 25, 1987, with no limitations.

On January 7, 1988, the captain completed recurrent ground training on the Boeing 737. On February 17, 1988, the captain received a proficiency check in a B-737 simulator at another major airlines facility. The captain had flown a total of 8,500 hours, 6,700 hours of which were in the Boeing 737. During the last 90 days, 60 days, and 30 days before the accident, the captain had flown: 107 hours, 4 minutes; 72 hours, 3 minutes; and 41 hours, 23 minutes, respectively. In the 24 hours previous to the accident, the captain had flown 4 hours and 26 minutes and had a total duty time of 8 hours and 50 minutes.

First Officer Madeline Lynn Tompkins

First Officer Madeline L. Tompkins, 37, was hired by Aloha Airlines on June 4, 1979. The first officer holds ATP Certificate 1907395, with commercial privileges in airplanes single and multiengine land and glider aero tow only. The first officer was issued an FAA First Class Medical Certificate with no restrictions on January 5, 1988, with the limitation that "Holder shall wear corrective lenses while exercising the privilege of her airman certificate."

The first officer qualified as a Boeing 737 first officer on June 30, 1979. Her most recent recurrent ground training and proficiency check were both completed on April 8, 1988. The first officer had flown a total of 8,000 hours, 3,500 hours of which were in the Boeing 737. During the last 90 days, 60 days, and 30 days before the accident, the first officer had flown: 189 hours, 29 minutes; 128 hours, 27 minutes; and 58 hours, 46 minutes, respectively. In the 24 hours previous to the accident, the first officer had flown 1 hour and 5 minutes and had a total duty time of 3 hours and 20 minutes.

Flight Attendant Clarabelle Lansing

Flight Attendant Clarabelle Lansing, 58, was employed by Aloha Airlines on August 1, 1951 and she had completed recurrent emergency training on September 29, 1987. She was assigned exit L-1 for takeoff and landing.

Flight Attendant Michelle Honda

Flight Attendant Michelle Honda, 35, was employed by Aloha Airlines on July 1, 1974 and she had completed recurrent emergency training on December 9, 1987. She was assigned exit R-3 for takeoff and landing.

Flight Attendant Jane Sato-Tomita

Flight Attendant Jane Sato-Tomita, 43, was employed by Aloha Airlines on December 1, 1969 and she had completed recurrent emergency training on January 5, 1988. She was assigned exit R-1 for takeoff and landing.

Inspector Wilfred Y. K. Soong

Inspector Wilfred Y. K. Soong was employed by Aloha Airlines in June, 1966 in the line maintenance department. He has served as an Aloha Airlines maintenance supervisor. He holds FAA Airplane and Powerplant License 1687694 and has 22 years experience in aircraft maintenance. He was appointed to his present position as an inspector in September, 1987. Mr. Soong testified that his inspector training was received through on-the-job instruction. Mr. Soong's Aloha Airlines Formal Training Record contains one entry for the period subsequent to his appointment as an inspector, an NDI workshop presented by Boeing for 2 hours.

Senior Lead Inspector Edward Matsumoto

Senior Lead Inspector Edward Matsumoto was employed by Aloha Airlines in January, 1960, as a mechanic. He has served as an Aloha Airlines inspector and foreman. He holds FAA Airplane and Powerplant License 1450079 and has more than 33 years experience in aircraft maintenance. Mr. Matsumoto's Aloha Airlines Formal Training Record is silent from 1968 until September 17, 1987, when he attended an NDI workshop presented by Boeing for 2 hours.

APPENDIX C

BOEING SERVICE BULLETIN 737-53-1039, Rev. 2

REVISION FEB 11 1974

TRANSMITTAL SHEET

Boeing Service Bulletin 737-53-1039

This sheet transmits REVISION 2 dated February 8, 1974 to Service Bulletin 737-53-1039, BODY SKIN LAP JOINT INSPECTION AND REPAIR.

NOTE: This revision constitutes a complete reissue.

SUMMARY

This revision is issued to add a specific corrosion and fatigue damage inspection program, expand the effectivity to include airplanes sealed in production, delete ultrasonic void and feeler gage inspections, delete several ultrasonic thickness measuring instruments and incorporate outstanding status change notices.

Airplanes on which lap joints were sealed per Service Bulletin 53-1017, SEALING OF COLD-BONDED STRUCTURE FOR CORROSION PROTECTION, as an adhesive deterioration and corrosion preventive measure require corrosion and fatigue damage inspection per this revision.

Airplanes on which joints were refastened per previous issues of this bulletin or the methods detailed in Structural Repair Manual, 53-30-1, Figure 5, require corrosion inspection only per this revision.

All pages of this revision contain new, revised or relocated information.

REVISION HISTORY

Original Issue: July 19, 1972
Revision 1: October 11, 1972
Revision 2: February 8, 1974

[redacted]

BOEING COMMERCIAL AIRPLANE COMPANY
CUSTOMER SUPPORT

APPENDIX C

BOEING

THE BOEING COMPANY COMMERCIAL AIRPLANE GROUP
P.O. BOX 3707 SEATTLE, WASHINGTON 98124

SERVICE BULLETIN

ATA SYSTEM: 53

737

NO: 737-53-1039
DATE: July 19, 1972
REVISION 2: February 8, 1974

SUBJECT: BODY SKIN LAP JOINT INSPECTION AND REPAIR

I. Planning Information

A. Effectivity

1. Airplanes Affected

This change is applicable only to the airplanes listed below.

CUSTOMER & CUSTOMER NO.	MODEL & SERIES	MFG. SERIAL NO.	REGISTRY NO.
AF (AIR FRANCE) PG2046PG222	737-247	19601 AND 20126	N4504W AND N4522W

APPENDIX C

BOEING SERVICE BULLETIN NO. 737-53-1039

CUSTOMER & CUSTOMER NO.	MODEL & SERIES	MFG. SERIAL NO.	REGISTRY NO.
AH (AIR ALGERIE)			
PL716	737-206	20544	7T-VEC
AP (AIR CALIFORNIA)			
PG271-PG274	737-293	19306 THRU 19309	N461GB THRU N464GB
PG275&PG276	737-293	19713 AND 19714	N465GB AND N467GB
PG277&PG278	737-293	20334 AND 20335	N468AC AND N469AC
AQ (SOUTHWEST AIRLINES CO.)			
PG279	737-293	20336	N22SW
PG705	737-297	20345	N21SW
PX071	737-297C	20346	N23SW
AR (ARGENTINAS)			
PH705-PH708	737-287	20403 THRU 20406	LV-JMW THRU LV-JMZ
PH741&PH742	737-287	20523 AND 20537	LV-JTD AND LV-JTO
PY007&PY008	737-287C	20407 AND 20408	LV-JND AND LV-JNE
BU (BRAATHENS)			
PJ001&PJ002	737-205	19408 AND 19409	LN-SUS AND LN-SUP
PY381	737-205C	20456	LN-SUA
PL803	737-2A6	20412	LN-SUG
CP (CANADIAN PACIFIC)			
PG501-PG504	737-217	19884 THRU 19887	CF-CPB THRU CF-CPE
PG505	737-217	19888	CF-CPU
PJ031&PJ032	737-217	20196 AND 20197	CF-CPV AND CF-CPZ
EZ (ESSEX INTL)			
PL802	737-2A6	20195	N1288
FL (FRONTIER)			
PG621&PG622	737-2C0	20070 AND 20071	N7378F AND N7379F
PG623&PG624	737-2C0	20072 AND 20073	N7372F AND N7370F
PG625	737-2C0	20074	N7371F
PG626-PG630	737-291	20361 THRU 20365	N7373F THRU N7377F
PG431	737-214	19681	N7380F
PG442	737-214	20369	N7381F
PL711	737-212	20492	N7382F
PG037	737-222	19075	N7383F

APPENDIX C

BOEING SERVICE BULLETIN NO. 737-53-1039

CUSTOMER & CUSTOMER NO.	MODEL & SERIES	MFG. SERIAL NO.	REGISTRY NO.
IC (INDIAN)			
PH709-PH714	737-2A8	20480 THRU 20485	VT-EAG THRU VT-EAL
IN (IRISH INTERNAT)			
PG251&PG252	737-248	19424 AND 19425	EI-ASA AND EI-ASB
PG253&PG254	737-248	20221 AND 20222	EI-ASF AND EI-ASG
PG255	737-248	20223	EI-ASH
PY321-PY323	737-248QC	20218 THRU 20220	EI-ASC THRU EI-ASE
IR (IRAN)			
PH731&PH732	737-286	20498 AND 20499	EP-IRF AND EP-IRG
PY021	737-286C	20500	EP-IRH
LH (LUFTHANSA)			
PA001-PA004	737-130	19013 THRU 19016	D-ABEA THRU D-ABED
PA005-PA008	737-130	19017 THRU 19020	D-ABEF THRU D-ABEI
PA009-PA021	737-130	19021 THRU 19033	D-ABEK THRU D-ABEW
PA022	737-130	19794	D-ABEY
PY341-PY346	737-230QC	20253 THRU 20258	D-ABBE THRU D-ABHE
MD (AIR MADAGASCAR)			
PG375	737-282	20231	5R-MFA
MI (MARITIME INV & SHIPPING)			
PL801	737-2A6	20194	VR-BEH
MT (MEY-AIR)			
PG313&PG314	737-2H5	20453 AND 20454	LN-MTC AND LN-MTD
NO (NORDAIR)			
PL912	737-212	20521	CF-NAW
PY301&PY302	737-242C	19847 AND 19848	CF-NAB AND CF-NAH
PY303&PY304	737-242C	20455 AND 20496	CF-NAQ AND CF-NAP
NH (ALL NIPPON)			
PG571&PG572	737-281	20226 AND 20227	JA8401 AND JA8402
PG573&PG574	737-281	20276 AND 20277	JA8403 AND JA8405
PG575&PG576	737-281	20413 AND 20414	JA8406 AND JA8407
PG577-PG580	737-281	20449 THRU 20452	JA8408 THRU JA8411
PG58_&PG582	737-281	20506 AND 20507	JA8412 AND JA8413
PG583	737-281	20508	JA8414

APPENDIX C

BOEING SERVICE BULLETIN NO. 737-53-1039

CUSTOMER & CUSTOMER NO.	MODEL & SERIES	MFG. SERIAL NO.	REGISTRY NO.
NV (N.A.S.A.)			
PA099	727-130	19473	N515NA
NZ (NEW ZEALAND)			
PG199	737-222	19758	*
PG401-PG403	737-219	19929 THRU 19931	ZK-NAC THRU ZK-NAE
PG436	737-214	20156	ZK-NAK
PG704	737-297	20344	ZK-NAJ
PI (PIEDMONT)			
PG301-PG305	737-201	19418 THRU 19422	N734N THRU N738N
PG306&PG307	737-201	19423 AND 20211	N740N AND N741N
PG308-PG312	737-201	20212 THRU 20216	N743N THRU N747N
PG035	737-222	19073	N752N
PG041&PG042	737-222	19547 AND 19548	N749N AND N751N
PG049	737-222	19555	N9049U
PS (PACIFIC SOUTHWEST)			
PG432&PG433	737-214	19682 AND 19920	N379PS AND N380PS
PG435	737-214	20155	N382PS
PG437-PG440	737-214	20157 THRU 20160	N984PS THRU N987PS
PG441	737-214	20368	N988PS
PU (PLUNA)			
PJ071	737-2A3	20299	CX-BHM
PV (EASTERN PROVINCIAL)			
PG651&PG652	737-2E1	20396 AND 20397	CF-EPL AND CF-EPR
PJ072	737-2E1	20300	CF-EPC
PW (PACIFIC WESTERN)			
PG434	737-214	19921	CF-PWM
PH701&PH702	737-275	19742 AND 20142	CF-PWD AND CF-PWC
PX701	737-275C	19743	CF-PWE
SA (SOUTH AFRICAN)			
PG351&PG352	737-244	19707 AND 19708	ZS-SBL AND ZS-SBM
PG353	737-244	20229	ZS-SBN
PG354-PG356	737-244	20329 THRU 20331	ZS-SBO THRU ZS-SBR

APPENDIX C

BOEING SERVICE BULLETIN NO. 737-53-1039

CUSTOMER & CUSTOMER NO.	MODEL & SERIES	MFG. SERIAL NO.	REGISTRY NO.
SO (SINGAPORE AIRLINES LTD.)			
PC001&PC002	737-112	19768 AND 19769	9V-BFD AND 9V-BBC
PC003&PC004	737-112	19770 AND 19771	9V-BFE AND 9V-BBE
PC005	737-112	19772	9V-BFF
TN (DETA)			
PH703&PH704	737-281	20280 AND 20281	CR-BAA AND CR-BAB
PY031	737-281C	20536	CR-BAC
TS (ALOHA)			
PA231&PA232	737-159	19679 AND 19680	N73715 AND N73717
PG701&PG702	737-297	20209 AND 20210	N73711 AND N73712
PG703	737-297	20242	N73713
TZ (TRANSAIR LTD.)			
PY004&PY005	737-2A9C	20205 AND 20206	CF-TAO AND CF-TAN
UA (UNITED)			
PG001-PG004	737-222	19039 THRU 19042	N9001U THRU N9004U
PG006-PG034	737-222	19044 THRU 19072	N9006U THRU N9034U
PG038-PG040	737-222	19076 THRU 19078	N9038U THRU N9040U
PG043-PG048	737-222	19549 THRU 19554	N9043U THRU N9048U
PG050	737-222	19556	N9050U
PG051-PG075	737-222	19932 THRU 19956	N9051U THRU N9075U
VP (VASP SAO PAULO)			
PG471-PG475	737-2A1	20092 THRU 20096	PP-SMA THRU PP-SME
WA (WESTERN)			
PG201-PG203	737-247	19598 THRU 19600	N4501W THRU N4503W
PG205-PG220	737-247	19602 THRU 19617	N4505W THRU N4520W
PG221	737-247	20125	N4521W
PG223-PG230	737-247	20127 THRU 20134	N4523W THRU N4530W
WE (WIEN CONSOLIDATED)			
PY001	737-202C	19425	N2711R
PY002&PY003	737-210C	19594 AND 20138	N4907 AND N4906
PY004	737-210C	20440	N4902W

APPENDIX C

BOEING SERVICE BULLETIN NO. 737-53-1039

CUSTOMER & CUSTOMER NO.	MODEL & SERIES	MFG. SERIAL NO.	REGISTRY NO.
ZD (BRITANNIA)			
PG331&PG332	737-204	19709 AND 19710	G-AVRL AND G-AVRM
PJ101&PJ102	737-204	19711 AND 19712	G-AVRN AND G-AVRO
PJ103&PJ104	737-204	20236 AND 20417	G-AWSY AND G-AXNC
PY361&PY362	737-204C	20282 AND 20389	G-AXNA AND G-AXNB
PG036	737-222	19074	G-AZNZ

* Number not available.

The following operators included in the original issue of this service bulletin are no longer affected and therefore have been deleted from the effectivity:

GERMAN REPUBLIC and MALAYSIA-SINGAPORE AIRLINE.

2. Spares Affected

No Boeing supplied spares.

B. Reason

The longitudinal lap joints on affected 737 airplanes were manufactured by placing a room temperature curing epoxy adhesive (BMS 5-10) between the overlapped skins prior to flush riveting the skins together. The purpose of the bond was to improve fatigue life.

Seven operators have reported instances of deterioration of the adhesive used to bond the lap joints resulting in joint delamination and corrosion on thirty airplanes. This condition was found on airplanes with as low as 3000 flight-hours. The deteriorated areas varied from small isolated pockets to areas six feet or more in length. In most instances these areas could be positively identified only after corrosion caused exterior skin bulges, cracks or missing fastener heads. Airplanes operating in warm moist climates are the most susceptible to adhesive deterioration.

In all instances of joint deterioration reported to date, none of the joints had developed fatigue cracks. Some of the airplanes with large areas of delamination, had accumulated in excess of 20,000 cabin pressuriztion cycles. Prolonged operation with large areas of delaimination will eventually result in fatigue cracking. The time at which fatigue cracks will occur depends on the degree of delamination and the presence of corrosion. Any effective bond, especially in the upper portion of the joint, will delay cracking. It is emphasized that fatigue crack vulnerability exists only where there are large areas of delamination.

Laboratory tests have shown that for the lightest gage skins (.036 inch) the theoretical fatigue life of a lap joint with a large area of delamination would be reduced. The reduced fatigue life of a light gage delaminated joint is attributed to the sharp edge at the base of the fastener head countersink. Heavier gage skins in a joint with large delaminated areas exhibit higher fatigue strength because the edge at the base of the countersink is not as sharp. Lap joints with outer skin gages .036 inch and greater have satisfactory fatigue life even in a completely delaminated condition. However, these joints are still subject to corrosion damage.

APPENDIX C

BOEING SERVICE BULLETIN NO. 737-53-1039

Subsequent to the original issue of this bulletin the bonded lap joints were sealed in production to prevent moisture contact with the cured adhesive. Recent service experience with both factory sealed and operator sealed joints indicates that sealing has not been successful in preventing adhesive deterioration. There is some evidence that moisture may enter the joint around the external head of joint fasteners. Because of this, the effectivity is expanded to include all airplanes with bonded lap joints.

C. Description

This bulletin revision (Revision 2) is issued to describe the minimum corrosion and fatigue damage inspection program for maintaining the structural integrity of bonded lap joints. The corrosion inspection portion of the program consists of an external visual inspection for skin bulges, cracks or missing fastener heads indicating substantial corrosion, and an external LPS-3 application. The frequency of corrosion inspection should be based on operator experience but should not exceed six month intervals for joints in the lower lobe of the body and one year intervals for joints in the upper lobe. The fatigue damage inspection consists of an annual external close visual inspection of the joint outer skin adjacent to the head of the upper row of joint fasteners for cracks. This inspection is applicable only to joints in which the outer skin gage is less than .056 inch and should commence upon accumulation of 30,000 cabin pressurization cycles. Although fatigue crack vulnerability exists only in joint areas with large delaminations, this inspection is recommended at all joint areas where the outer skin gage is less than .056 inch because service experience has revealed that there is difficulty in discriminating bonded joint areas from delaminated areas when no corrosion is present in the delamination.

Because of delamination reported on sealed lap joints, the effectivity is expanded to include airplanes with bonded lap joints that were sealed in production. Airplanes on which lap joints were sealed per Service Bulletin 53-1017, SEALING OF COLD-BONDED BODY STRUCTURE FOR CORROSION PROTECTION, are considered the same as those airplanes sealed in production and require corrosion and fatigue damage inspection. Airplanes on which joints were refastened per previous issues of this bulletin or one of the methods detailed in Structural Repair Manual, Subject 53-30-1 Figure 5, require corrosion inspection only.

The ultrasonic void and feeler gage inspections are deleted because, although some operators have used them with satisfactory results, many operators have experienced difficulty because of confusion and misunderstandings concerning inspection limitations and interpretation of results. Several ultrasonic thickness measuring instruments are deleted because operators have reported that the depth of moderate to severe corrosion could not be determined using these instruments.

D. Approval

The repair described herein has been approved by the FAA Designated Engineering Representative at The Boeing Company.

E. Manpower

Approximate man-hours and crew size for individual tasks are as follows:

Operation	Crew Size (Men)	Man-Hours	Airplane Down-Time (Hours)
Corrosion Inspection	2	40	20
Fatigue Inspection	2	40	20
Fatigue and/or Corrosion Repair	*	*	*

* Dependent on number, location and size of repairs required.

F. Material - Price and Availability

It is recommended that the parts and materials identified in paragraph II.A. be furnished or fabricated from operator's existing stock or purchased directly from industry sources. Accordingly, price and delivery data is not included in support of this bulletin.

APPENDIX C

BOEING SERVICE BULLETIN NO. 737-53-1039

G. Tooling - Price and Availability

Special ultrasonic or low frequency eddy-current testing equipment, Visu-Lok installation tools and Unisink Head Bulbed Cherrylock installation tools may be needed depending on operator's course of action. If such equipment is desired, it is recommended that it be furnished from operator's existing inventory or purchased directly from industry sources. Accordingly, price and delivery data is not included in support of this bulletin.

H. Weight and Balance

Change in weight and balance will depend on number, type and size of repairs and amount of sealant and/or LPS-3 applied.

I. References

1. Existing Data:

   a. Structural Repair Manual D6-15565, Subject 51-10-2, 53-30-1, 53-30-2, 53-30-3 and 53-30-4.
   b. Boeing Non-Destructive Test Manual, Document D6-7170, Part 1 and Part 4
   c. Boeing Service Bulletin 53-1017, Sealing of Cold-Bonded Structure For Corrosion Protection

2. New or revised data supplied in support of this bulletin:

   None

J. Publications Affected

The modification described herein affects the following publication:

Publication	Chapter and/or Section
737 Structural Repair Manual	53-30

APPENDIX C

BOEING SERVICE BULLETIN NO. 737-53-1039

II. Material Information

A. Parts Required Per Airplane

NOTE: All or a portion of the following is required depending on operator's course of action.

Quantity	Part Number	Nomenclature
As Required	See Structural Repair Manual, Subject 53-30-4	Sealant
As Required	LPS-3	Water Displacing Corrosion Inhibiting Compound
As Required	NAS1398D8-( )	Blind Rivet
As Required	PLT1007-6-( )	Visu-Lok Blind Fastener
As Required	CR 2235-6-( )	Unisink Head Bulbed Cherrylock

Vendor Information

Boeing Part No.	Vendor Part No.	Vendor
-	LPS-3	LPS Laboratories, Inc. 2050 Cotner Ave. Los Angeles, Calif. 90025
-	PLT1007-6-( )	The National Screw and Mfg. Co. 3423 S. Garfield Ave. Los Angeles, Calif. 90022
-	CR 2235-6-( )	Townsend Co. Cherry Rivet Div. 1224 E. Warner Ave. Santa Ana, Calif. 92707

B. Parts Required to Modify Spares

None

C. Removed Parts

None

APPENDIX C

BOEING SERVICE BULLETIN NO. 737-53-1039

D. Special Tools and Equipment Required

1. One or more of the following test instruments, suitable for corrosion detection and thickness measurement, may be required depending on operator's course of action and may be obtained from the following manufacturers:

Instrument Vendor Information

Application	Instrument	Vendor
Corrosion detection and thickness estimation - low frequency eddy-current method	EM-1500	Automation Industries Shelter Rock Road Danbury, Conn.
	NDT-3	Nortec Inc. 3001 George Wash. Way Richland, Wash.
	Phasemaster	Laser Systems & Electronics Inc. Tullahoma, Tenn.
Corrosion detection and thickness measurement - ultrasonic method	Nanoscope 412	Van Waters & Rodgers Co. 1363 So. Bonnie Beach Pl. Los Angeles, Calif.

2. Power tools may be used to install Visu-Lok fasteners. For applicable tools contact the National Screw & Mfg. Co.

3. Reference standards are required for use with low frequency eddy-current inspection instruments. Reference standard number one and two are required for passenger airplanes. All three standards are required for cargo airplanes. Fabricate per Figure 1.

APPENDIX C

BOEING SERVICE BULLETIN NO. 737-53-1039

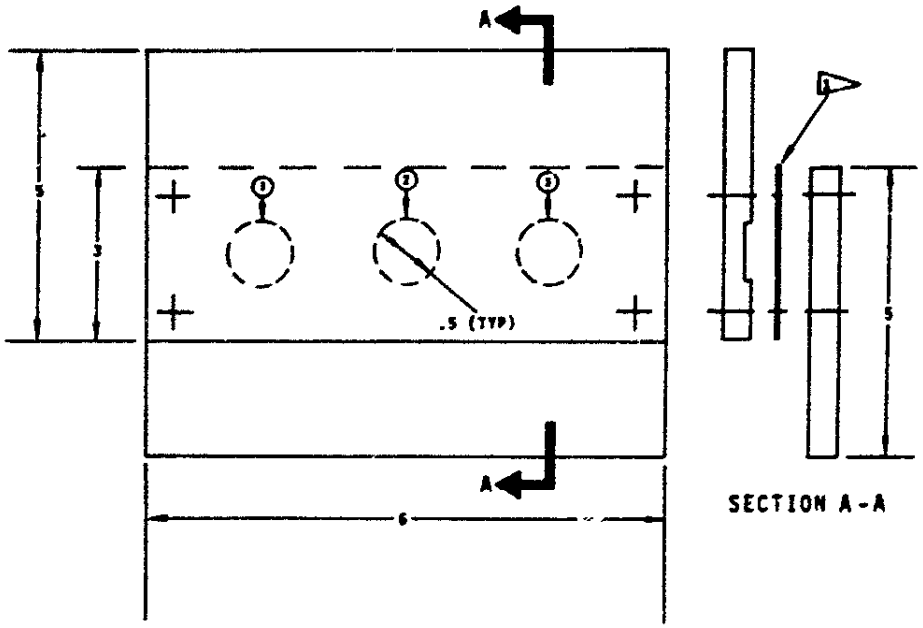

1 PAPER .008 TO .010 INCH THICK TO SIMULATE CURED ADHESIVE.

REF STANDARD NO.	SHEET THICKNESS*	SPOTFACE LOCATION AND DEPTH		
		1 10%	2 20%	3 30%
1	.036	.004	.008	.012
2	.040	.004	.008	.012
3	.070	.007	.014	.021

* MAKE FROM 2024-T3 OR -T4 CLAD AL ALLOY SHEET.

FIGURE 1. LOW FREQUENCY EDDY-CURRENT REFERENCE STANDARDS

APPENDIX C

BOEING SERVICE BULLETIN NO. 737-53-1039

4. The following tools may be used to install Unisink Head Bulbed Cherrylock fasteners:

Pull Gun:	G-684
Flush Fastener Pull Head:	H681-6C
Vendor:	Townsend Co. Cherry Rivet Div. 1224 E. Warner Ave. Santa Ana, Calif. 92707

5. The following equipment has been tested and found satisfactory for blind application of LPS-3 and is to be operator fabricated. Equivalent operator designed equipment may also be used as long as it is designed to apply only the minimum amount of LPS-3 required to saturate the void and to prevent LPS-3 contamination of insulation materials. This equipment is for use with the one row blind fastener joint refastening method detailed in Part IV - Repair Data.

<u>Equipment - Method I (Optional to Method II)</u>

1. Four ounce pump type oilcan modified to incorporate a stop, stop screw, spring and special nozzle. Fabricate per Figure 2.

2. Lap joint sample for practice and stop adjustment. Fabricate per Figure 3.

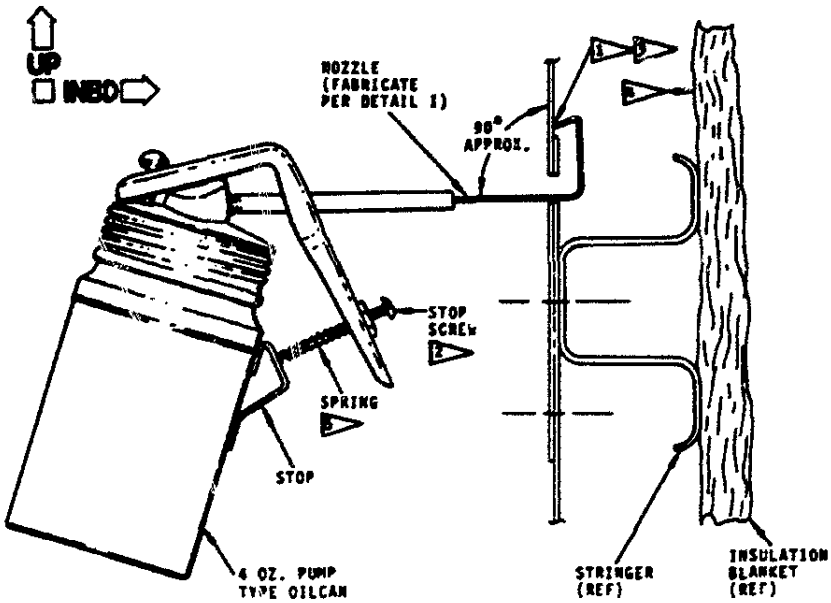

1. END OF NOZZLE SHOULD CONTACT SKIN FOR PROPER APPLICATION.

2. ADJUST STOP SCREW SO THAT ONE PUMP STROKE WILL DISCHARGE .10 TO .15 CUBIC CENTIMETERS OF LPS-3.

3. APPLY A MAXIMUM OF .15 CUBIC CENTIMETERS OF LPS-3 TO UPPER EDGE OF JOINT AT EACH UPPER ROW FASTENER HOLE WHERE A BLIND FASTENER WILL BE INSTALLED. RATE OF APPLICATION SHOULD APPROXIMATELY EQUAL RATE AT WHICH LPS-3 FLOWS DOWN THE SKIN ONTO THE JOINT FOR MAXIMUM JOINT SATURATION. CORRECT APPLICATION RATE IS ESTABLISHED BY TRIAL APPLICATION USING A JOINT SAMPLE FABRICATED PER FIGURE 3.

4. SPLATTERING OF LPS-3 ON INSULATION BLANKETS IS NOT TO BE ALLOWED.

5. SPRING AIDS IN CONTROLLING APPLICATION RATE.

FIGURE 2. BLIND LPS-3 APPLICATOR - METHOD I

APPENDIX C

BOEING SERVICE BULLETIN NO. 737-53-1039

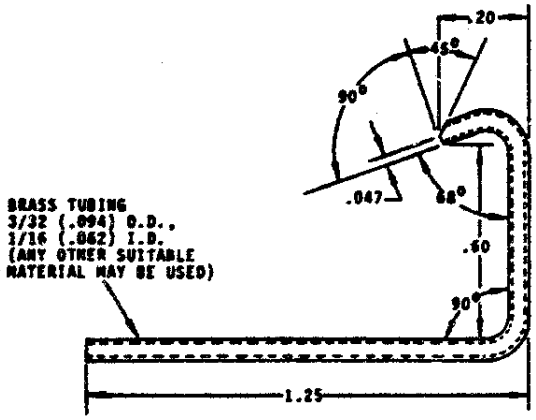

DETAIL I

FIGURE 2. BLIND LPS-3 APPLICATOR - METHOD I

APPENDIX C

BOEING SERVICE BULLETIN NO. 737-53-1039

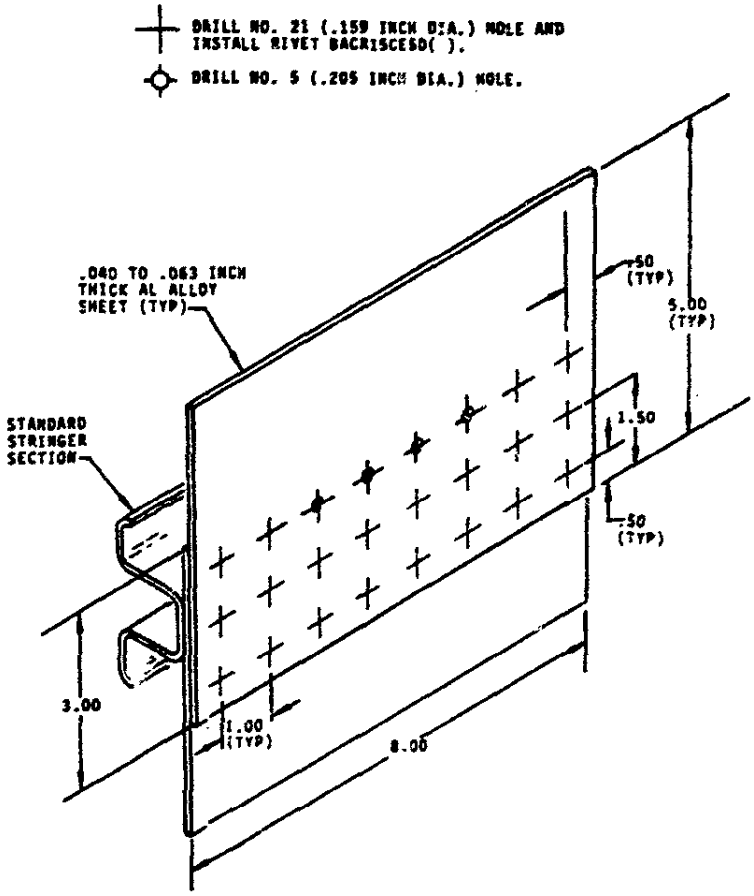

FIGURE 3. LAP JOINT SAMPLE FOR BLIND LPS-3 APPLICATOR ADJUSTMENT AND PRACTICE - METHOD I

APPENDIX C

BOEING SERVICE BULLETIN NO. 737-53-1039

Equipment - Method II (Optional to Method I)

NOTE: To reduce application time, it is suggested that this equipment be made in quantity so that several upper row fastener holes in the repair area may be treated simultaneously.

1. Applicator tip, stop collar and a length of clear plastic tubing. Fabricate and assemble per Figure 4.

2. A device or method for determining outer skin thickness.

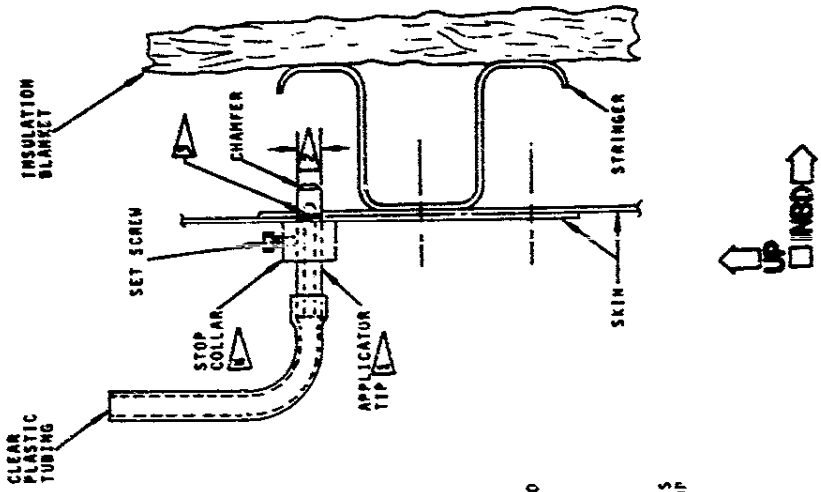

A MAKE APPLICATOR TIP FROM ANY CONVENIENT NON-METALLIC MATERIAL EITHER SOLID OR HOLLOW. IF SOLID MATERIAL IS USED, DRILL A HOLE FOR THE MAJORITY OF ITS LENGTH AS SHOWN. IF HOLLOW MATERIAL IS USED, SUITABLY PLUG ONE END.

B DIAMETER OF TIP DEPENDENT ON HOLE SIZE IN SKIN AND TIP MATERIAL. FIT OF TIP IN HOLE SHOULD BE A LIGHT INTERFERENCE FIT TO PRECLUDE AN APPRECIABLE AMOUNT OF LPS-3 FLOWING PAST THE TIP AND DOWN THE INNER SURFACE OF THE SKIN. THE INTENT IS TO HOLD THE LPS-3 SUPPLY AT THE MATING SURFACE. CORRECT TIP DIAMETER IS BEST DETERMINED EXPERIMENTALLY.

C DRILL FOUR .03 DIA. DISCHARGE HOLES 90 DEGREES APART.

D MAKE STOP COLLAR FROM ANY SUITABLE METALLIC OR NON-METALLIC MATERIAL AND INSTALL SET SCREW.

TOOL USAGE INSTRUCTIONS

1. DETERMINE OUTER SKIN THICKNESS AT HOLE AND ADJUST STOP COLLAR SO THAT DISTANCE FROM CENTER OF DISCHARGE HOLES TO STOP COLLAR EQUALS OUTER SKIN THICKNESS.

2. INSERT TIP INTO FASTENER HOLE UNTIL STOP CONTACTS SKIN.

3. FILL CLEAR PLASTIC TUBING WITH LPS-3 TO A LEVEL APPROXIMATELY .5 INCH ABOVE DISCHARGE HOLES.

4. ALLOW TOOL TO REMAIN IN PLACE FOR APPROXIMATELY 5 MINUTES TO ACHIEVE MAXIMUM PENETRATION. A VISUALLY APPARENT DROP IN FLUID LEVEL MAY OR MAY NOT OCCUR, DEPENDING ON VOID SIZE AND GAP BETWEEN THE SKINS. IF THE GAP BETWEEN THE SKINS IS VERY SMALL THE FLUID LEVEL MAY NOT APPEAR TO DROP. HOWEVER, TESTS INDICATE THAT THE VOID AREA IS NEVERTHELESS SATURATED WITH LPS-3 AND THEREFORE THE LACK OF A VISUAL DROP IN FLUID LEVEL IS UNIMPORTANT.

FIGURE 4. BLIND LPS-3 APPLICATOR - METHOD II

APPENDIX C

BOEING SERVICE BULLETIN NO. 737-53-1039

III. Accomplishment Instructions

The following program outlines the minimum requirements for maintaining the structural integrity of lap joints. The inspection for corrosion will detect severe corrosion requiring repair by installing repair doublers. The inspection for fatigue damage will detect large fatigue cracks (.25 inch in length and greater) emanating from upper row fastener holes. These cracks will be large enough to require repair by installation of repair doublers. In the following inspections each panel is treated as a separate entity and the inspection results of one panel cannot reliably be used to indicate the condition of another.

Part I - Corrosion Inspection and Repair

On all airplanes, accomplish the following corrosion inspection and LPS-3 application at six month intervals on lower lobe joints and one year intervals on upper lobe joints.

A. Visually inspect external surface of lap joint for skin bulges adjacent to fasteners, skin cracks caused by severe corrosion, dished fastener heads or missing fastener heads.

B. If corrosion indications noted in step A are found, determine extent of corrosion damage for full length of the panel joint. Extent of damage may be determined using the low frequency eddy-current inspection in Part III or by any other suitable means. Corrosion may be removed by local blend out if the blend out depth does not exceed 10 percent of the skin thickness except that in small local areas not exceeding 3 inches in length in any 20 inches of joint a skin thickness reduction of 20 percent is acceptable and in small local areas not exceeding 1.5 inches in length in any 20 inches of joint a skin thickness reduction of 40 percent is acceptable. In areas where skin thickness is reduced by 40 percent it is suggested that a faying surface sealed shim and oversize protruding head fasteners be installed if there are existing fastener holes in the rework area. After corrosion removal refasten the joint per Part IV or Structural Repair Manual, Subject 53-30-1, Figure 5, Method I or II. Corrosion exceeding the above limits should be repaired per Structural Repair Manual, Subject 53-30-3.

C. In panel joint areas where no corrosion indications are found, apply LPS-3 to joint external edge and fastener external heads in joint per operator's standard procedure (Ref. Structural Repair Manual, Subject 51-10-2). For maximum penetration, it is suggested that LPS-3 be applied to the joint edge under pressure using equipment such as an airless paint spray pump.

NOTE: Fillet seal along the edge of the lap joint prevents LPS-3 application to the joint edge but need not be removed unless deteriorated. Reestablishment of deteriorated fillet seal is optional.

D. After LPS-3 becomes tacky, excess may be removed per operator's standard procedure (Ref. Structural Repair Manual, Subject 51-10-2).

Part II - Fatigue Damage Inspection and Repair

On all airplanes upon accumulation of 30,000 cabin pressurization cycles, accomplish the following inspection for fatigue cracks annually in joint areas where the joint outer skin gage is less than .056 inch.

A. With the aid of a bright light, visually inspect the body skin forward and aft of the head of the lap joint upper row fasteners for fatigue cracks. See Figure 5.

B. If fatigue cracks are found, eddy-current inspect the skin adjacent to all joint upper row fastener heads the the full length of the panel in which cracks were found. See Nondestructive Test Document D6-7170, Part 6, Subject 53-30-00 for inspection equipment and technique.

C. Repair fatigue cracks using a repair similar to that shown in Structural Repair Manual, Subject 53-30-3, Figure 16, and replace all remaining upper row flush joint fasteners in that panel joint with oversize protruding head fasteners per Part IV - Repair Data.

D. Areas where no fatigue cracks are found should be reinspected annually. Reinspection for fatigue cracks may be terminated be replacing the existing upper row of joint fasteners with standard protruding head solid fasteners per Part IV. However, a corrosion inspection program should be maintained.

APPENDIX C

BOEING SERVICE BULLETIN NO. 737-53-1039

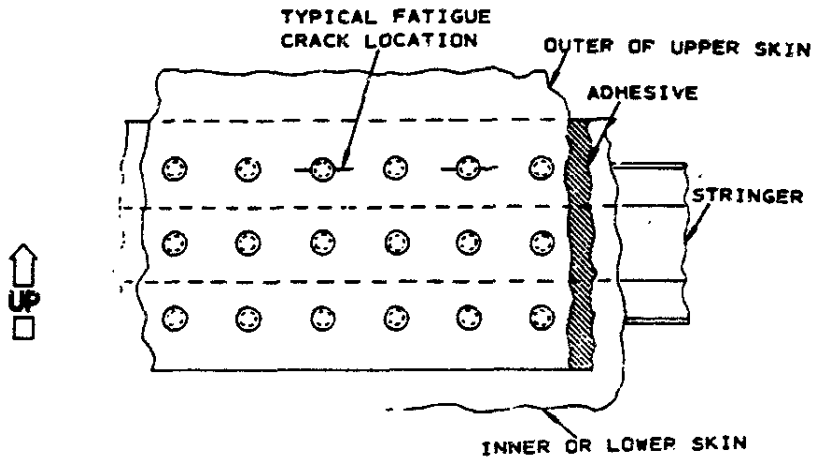

FIGURE 5. FATIGUE CRACK LOCATION

Part III-Low Frequency Eddy-Current Corrosion Damage Inspection

Eddy-current instruments with low frequency capability provide a rapid method of locating moderate to severe corrosion on inner and outer joint skin faying surfaces. Instruments of this type provide an estimate of skin thickness loss by the comparison method. Although a precise measurement is not obtained, the method is fast, does not require paint stripping or a couplant, does not require access to the internal side of the joint and can inspect inner and outer skin faying surfaces simultaneously.

Technical information on low frequency eddy-current inspection will be published in Boeing Nondestructive Test Manual, Document D6-7170.

A. Equipment

1. The following instruments, or equivalent, may be used.

   a. EM-1500
   b. NDT-3
   c. Phasemaster

   NOTE 1: These instruments should have frequency capabilities or modules listed in Table I.

   2: See paragraph II.D.1 for instrument vendor information.

2. Use a flat spring loaded eddy-current probe compatible to the instrument used. Probes with wear plates are suggested if large areas are to be scanned.

B. Prepare surface for inspection by removing dust and dirt per operator's standard procedure.

C. Calibrate instrument for simultaneous inspection of inner and outer joint skin faying surfaces as follows:

1. Set up instrument to operate on correct frequency for applicable skin thickness. See Table I.

APPENDIX C

2. Adjust for lift-off per instrument manufacturer's instructions.

3. Using reference standard, check instrument response to a 10 percent loss in inner skin thickness. It is suggested that instrument sensitivity be set such that a 10 percent thickness reduction will cause a 10 percent change in meter reading.

4. Inspect area in question per Step D.

D. Inspect area in question as follows:

1. Place probe on lap joint between fasteners and adjust meter to approximately mid scale.

2. Scan area in question for indications of corrosion. Severity of corrosion will be indicated by magnitude of meter change.

NOTE 1: It is suggested that particular attention be paid to the upper edge of the joint.

2: This inspection will not discriminate between corrosion on outer and inner skin. If it is desired to determine in which skin the corrosion is located the instrument should be set up on correct frequency per Table I to inspect outer skin only.

APPENDIX C

BOEING SERVICE BULLETIN NO. 737-53-1039

TABLE I.

Low Frequency Eddy-Current Frequencies

Skin Thickness ▷		Frequency (KHZ)	
Outer Skin	Inner Skin	Simultaneous inspection of outer and inner skin faying surface. ▷	Inspection of outer skin faying surface only.
.036	.036 & Up	25	31
.040 & .045	.036 & Up	10	25
.071 ▷	.036 & Up	2 To 5 ▷	10 ▷

▷ See Structural Repair Manual Subject 53-30-2 for skin thickness in a particular area.

▷ Minimum frequency selection required for locating and estimating corrosion damage.

▷ Applicable to 737-200C airplanes only.

APPENDIX C

BOEING SERVICE BULLETIN NO. 737-53-1039

Part IV - Repair Data

The following repairs are used to restore the fatigue life of a delaminated joint area or to refasten a joint separated for corrosion removal. The one row standard fastener repair is a permanent repair which replaces the existing flush fasteners in the joint upper row with oversize protruding head rivets. This repair may be used as a preventive modification and is optional to those detailed in Structural Repair Manual Subject 53-30-1 for joint refastening. The one row blind fastener repair is similar to the one row standard fastener repair except blind fasteners are used. This repair is life limited depending on the type of fastener used and the gage of the outer skin at the joint. After installation, the blind fasteners should be regularly inspected for looseness or working. After they have been in service for the stated period, a fatigue crack inspection as detailed in Part II should be initiated in the repair area or the blind fasteners should be replaced by standard rivets in which case fatigue crack inspection is not necessary.

NOTE: The following repairs may not be used in corroded areas where the skin thickness would be less than .032 inch after corrosion removal. For repair of corroded areas exceeding this limit, see Structural Repair Manual, Subject 53-30-1, Figure 5 Method I or II.

One Row Standard Fastener Repair

A. If joint was separated, remove loose adhesive, apply brush on chemical film treatment (Alodine or Iridite) and one coat of chemical and solvent resistant primer to metal faying surfaces. After primer has dried, apply sealant to faying surfaces. See Structural Repair Manual, Subject 53-30-4 for faying surface sealants.

B. If joint was not separated, inject as much LPS-3 as possible into the joint. See Structural Repair Manual, Subject 51-10-2 for LPS-3 application.

C. Install fasteners per Figure 6.

One Row Blind Fastener Repair (life limited)

This repair is life limited. The following fatigue lives were established by testing which assumed the absence of bond, fatigue cracks and corrosion and are to be calculated from the time blind fasteners are installed in the joint. If blind rivet NAS1398D8-( ) is installed, a fatigue life improvement of approximately 15,000 additional cabin pressurization cycles may be expected if the outer skin is less than .056 inch thick. If the outer skin is .056 inch thick or greater a life improvement of approximately 30,000 cabin presssurization cycles may be expected. If Visu-Lok blind rivet PLT1007-6-( ) or Unisink Head Bulbed Cherrylock CR 2235-6-( ) is installed a fatigue life improvement of approximately 30,000 additional cabin pressurization cycles may be expected. After installation, the blind fasteners should be inspected for looseners or working at regular major maintenance intervals to ensure that the indicated fatigue life is achieved. After the fasteners have been in service for the above stated period, inspection for fatigue cracks per Part II at these fastener locations should be initiated unless replacement with standard protruding head rivets is accomplished.

A. Remove existing upper row rivet if it is 3/16 inch diameter or smaller.

NOTE: If existing fastener is steel or a rivet larger than 3/16 inch diameter, removal is not required as this location will have a satisfactory fatigue life.

B. Enlarge existing hole with Size F (.257 inch diameter) drill if blind rivet NAS1398D8-( ) is to be installed, No. 3 (.213 inch diameter) drill if Visu-Lok blind rivet PLT1007-6-( ) is to be installed or No. 5 (.205 inch diameter) drill if Unisink Head Bulbed Cherrylock CR 2235-6-( ) is to be installed. Careful hole drilling is advised to keep hole diameter as close to minimum as possible.

NOTE: Visu-Lok blind rivet PLT1007-6-( ) or Unisink Head Bulbed Cherrylock CR 2235-6-( ) may be used to replace 5/32 inch diameter rivets only. For replacement of 3/16 inch diameter rivets use blind rivet NAS1398D8-( ).

APPENDIX C

BOEING SERVICE BULLETIN NO. 737-53-1039

C. To achieve the maximum service life associated with blind fastener installation, it is essential that no corrosion be present. It is suggested that LPS-3 be applied to joint faying surface through each open fastener hole using equipment similar to that detailed in paragraph II.D.5. After application, remove all traces of LPS-3 from external skin surface using a 1:1 mixture of methyl ethyl ketone and toluene.

NOTE 1: Contamination of insulation blankets with LPS-3 is not to be permitted.

2: LPS-3 application restrictions detailed in 737 Structural Repair Manual, Subject 51-10-2 concerning application in the vicinity of oxygen systems must be observed during blind application of LPS-3.

3: For full width delaminations both external and blind internal application of LPS-3 is suggested.

4: Application by aerosal can has been found to be unsatisfactory for blind application due to the likelihood of over-saturation from an uncontrolled spray and possible contamination of insulation blankets. However, it is satisfactory for external application where full width delaminations are found and excess amounts of LPS-3 may be wiped up.

D. Install blind rivet NAS1398D8-( ), Visu-Lok blind rivet PLF1007-6-( ) or Unisink Head Bulbed Cherrylock CR 2235-6-( ) as applicable with wet sealant PR1431G or PR1436G under rivet head.

IF EXISTING FASTENER IS LARGER THAN 3/16 INCH DIA. OR MADE OF STEEL, REMOVAL IS NOT REQUIRED. HOWEVER, IF FASTENER WAS REMOVED, INSTALL FASTENER OF SAME TYPE AND SIZE. IF EXISTING FASTENER IS A RIVET 3/16 INCH DIA. OR SMALLER, REMOVE EXISTING FASTENER. IF EXISTING RIVET WAS 5/32 INCH DIA., ENLARGE HOLE WITH NO. 2 (.221 INCH DIA.) DRILL. INSTALL RIVET MS20470AD7-( ). MINIMUM DIA. OF DRIVER HEAD TO BE .312 INCH. IF EXISTING RIVET WAS 3/16 INCH DIA., ENLARGE HOLE WITH SIZE F (.257 INCH DIA.) DRILL. INSTALL RIVET MS20470AD8-( ). MINIMUM DIA. OF DRIVEN HEAD TO BE .350 INCH. SMALL AMOUNT OF COUNTERSINK REMAINING AFTER OVERSIZING IS SATISFACTORY. INSTALL FASTENERS DRY.

A .312 INCH IF RIVET MS20470AD7-( ) IS INSTALLED.
.350 INCH IF RIVET MS20470AD8-( ) IS INSTALLED.

B REMOVAL OF EXISTING FASTENER NOT REQUIRED. IF EXISTING FASTENER WAS REMOVED, INSTALL NEW FASTENER OF SAME TYPE AND SIZE.

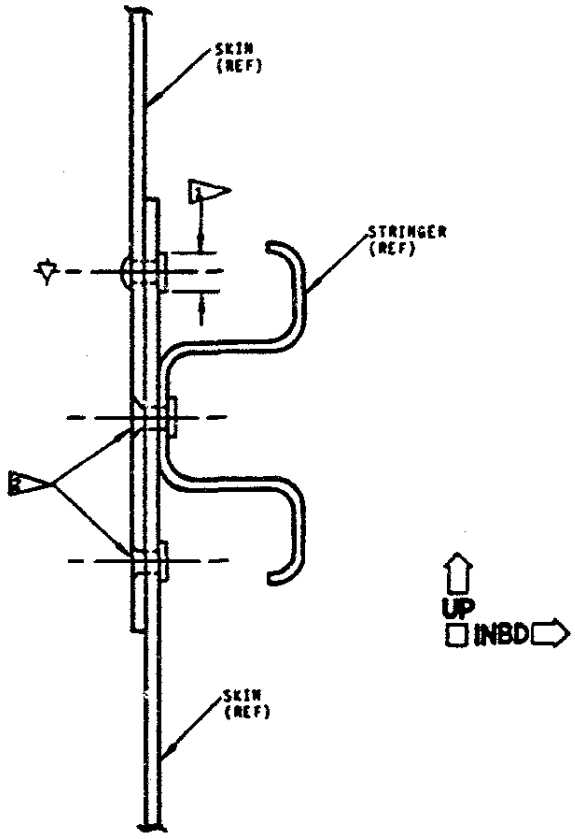

TYPICAL LAP JOINT

FIGURE 6. MECHANICAL JOINT FASTENING METHOD

APPENDIX C

U.S. Department of Transportation
Federal Aviation Administration

AIRWORTHINESS DIRECTIVE

AVIATION STANDARDS NATIONAL FIELD OFFICE
P.O. BOX 26460
OKLAHOMA CITY, OKLAHOMA 73125

The following Airworthiness Directive issued by the Federal Aviation Administration in accordance with the provisions of Federal Aviation Regulations, Part 39, applies to an aircraft model of which our records indicate you may be the registered owner. Airworthiness Directives affect aviation safety. They are regulations which require immediate attention. You are cautioned that no person may operate an aircraft to which an Airworthiness Directive applies, except in accordance with the requirements of the Airworthiness Directive (FAR 39.5).

87-21-08 BOEING: Amendment 39-5752. Applies to Model 737 series airplanes listed in Boeing Alert Service Bulletin 737-53A1039, Revision 3, dated August 20, 1987, certificated in any category. Compliance required as indicated, unless previously accomplished.

To prevent rapid depressurization as a result of failure of certain fuselage lap splices, accomplish the following:

A. Prior to the accumulation of 30,000 landings or within 250 landings after the effective date of this AD, whichever occurs later, and at intervals thereafter not to exceed 4,500 landings, perform a detailed visual inspection for cracking of the skin adjacent to the upper row of longitudinal lap splice fasteners, at stringer 4, both left and right side of the fuselage, from stations 360 to 1016, in accordance with Boeing Alert Service Bulletin 737-53A1039, Revision 3, dated August 20, 1987, or later FAA-approved revisions. If any cracks are found, perform an eddy current inspection for the full length of the panel in which the cracks were found in accordance with the service bulletin.

B. The repetitive inspections required by Paragraph A. of this AD may be terminated upon the performance of inspections for cracks and/or tearstrap delamination using one of the following three options in accordance with Boeing Alert Service Bulletin 737-53A1039, Revision 3, dated August 20, 1987, or later FAA-approved revisions:

1. Perform a high frequency eddy current inspection of the skin adjacent to the upper row of longitudinal lap splice fasteners at stringer 4, both left and right side of the fuselage, from stations 360 to 1016. Repeat at intervals thereafter not to exceed 20,000 landings. If no cracks are found, prior to the accumulation of 6,000 landings after the completion of the above eddy current inspection, and at intervals thereafter not to exceed 3,000 landings until the next eddy current inspection, perform a detailed visual inspection of these same areas.

2. Perform a high frequency eddy current inspection on the skin adjacent to the upper row of longitudinal lap splice fasteners at stringer 4, both left and right sides of the fuselage, from stations 360 to 1016. Repeat at intervals not to exceed 20,000 landings. In addition, perform a tearstrap inspection for delamination. If no cracks are found and tearstrap bond is intact, prior to the accumulation of 6,000 landings after the completion of the above inspections, and at intervals thereafter not to exceed 6,000 landings, perform a detailed visual inspection for skin cracks of the areas previously inspected by eddy current.

2 87-21-08

3. Perform a high frequency eddy current inspection of the skin adjacent to the upper row of longitudinal lap splice fasteners at stringer 4, both left and right side of fuselage, from stations 360 to 1016. In addition, perform a tearstrap inspection for delamination. Repeat the eddy current inspections at intervals not to exceed 10,000 landings and the delamination inspections at intervals not to exceed 20,000 landings.

C. Repair all cracks and tearstrap delaminations found as a result of the above inspections prior to further flight in accordance with Boeing Alert Service Bulletin 737-53A1039, Revision 3, dated August 20, 1987, or later FAA-approved revisions. If blind fasteners are used in the repair, reinspect installation at intervals not to exceed 3,000 landings for loose or missing fasteners. Also, if blind fasteners are used in the skin repair, prior to the accumulation of 15,000 landings after installation, or within 250 landings after the effective date of this AD, whichever is later, and thereafter at intervals not to exceed 4,500 landings, perform the inspection as detailed in paragraph A, above.

D. Terminating action for the inspections required by this AD is the replacement of the existing upper row of joint fasteners with standard protruding head solid fasteners at all affected fuselage longitudinal lap splices and ensuring functional tearstraps in accordance with Boeing Alert Service Bulletin 737-53A1039, Revision 3, dated August 20, 1987, or later FAA-approved revisions.

E. For the purpose of complying with this AD, the number of landings may be determined to equal the number of pressurization cycles where the cabin pressure differential was greater than 2.0 PSI.

F. An alternate means of compliance or adjustment of the compliance time, which provides an acceptable level of safety, and which has the concurrence of an FAA Principal Maintenance Inspector, may be used when approved by the Manager, Seattle Aircraft Certification Office, FAA, Northwest Mountain Region.

G. Special flight permits may be issued in accordance with FAR 21.197 and 21.199 to operate airplanes to a base for the accomplishment of inspections and/or modifications required by this AD.

All persons affected by this directive who have not already received the appropriate service information from the manufacturer may obtain copies upon request to the Boeing Commercial Airplane Company, P.O. Box 3707, Seattle, Washington 98124. This information may be examined at FAA, Northwest Mountain Region, 17900 Pacific Highway South, Seattle, Washington, or Seattle Aircraft Certification Office, FAA, Northwest Mountain Region, 9010 East Marginal Way South, Seattle, Washington.

This amendment becomes effective November 2, 1987.

APPENDIX C

87-21-08 3

FOR FURTHER INFORMATION CONTACT: Ms. Barbara J. Baillie, Airframe Branch, ANM-120S; telephone (206) 431-1927. Mailing address: FAA, Northwest Mountain Region, 17900 Pacific Highway South, C-68966, Seattle, Washington 98168.

APPENDIX C

BOEING

BOEING COMMERCIAL AIRPLANE COMPANY P.O. BOX 3707 SEATTLE, WASHINGTON 98124

737

REVISION TRANSMITTAL SHEET

Boeing Service Bulletin 737-53A1039

This sheet transmits REVISION 3 dated August 20, 1987 of Service Bulletin 737-53A1039, "BODY SKIN LAP JOINT INSPECTION AND REPAIR".

NOTE: This revision constitutes a complete reissue.

SUMMARY

This revision is issued to up-grade this service bulletin to an 'ALERT' status and to advise operators of recent service experience that warrants changes to the inspection cycle frequency after initial inspection at the 30,000 flight cycle threshold.

Airplane effectivity is updated to reflect current airplane ownership.

Airplanes inspected per the previous releases of this service bulletin require additional fatigue inspection.

Airplanes on which lap joints were refastened per previous issues of this bulletin or the methods detailed in Structural Repair Manual, 53-30-1, Figure 5, require corrosion inspection only per this revision.

All pages of this revision contain new, revised, or reformated information, therefore the revision bars in the left margin have been omitted.

REVISION HISTORY

Original Issue:	July 19, 1972
Revision 1:	October 11, 1972
Revision 2:	February 8, 1974
Revision 3:	August 20, 1987

COPY

APPENDIX C

BOEING 737 ALERT SERVICE BULLETIN SUMMARY

BOEING COMMERCIAL AIRPLANE COMPANY P.O. BOX 3707 SEATTLE, WASHINGTON 98124

SUBJECT: BODY SKIN LAP JOINT INSPECTION AND REPAIR

ATA: 5330 **NO:** 737-53A1039
DATE: July 19, 1972
REVISION 3: August 20, 1987

BACKGROUND

The longitudinal skin lap joints on affected airplanes were assembled with a room temperature curing epoxy adhesive strip between the overlap. Prior to Revision 2 operators reported deterioration of the adhesive causing delamination and providing a place for corrosion to form. Revision 2 was released to provide inspection, repair and terminating action for aforementioned condition. Since issue of Revision 2 an operator has reported multiple fatigue cracks in the outer skin of delaminated lap joints where no corrosion had formed. Therefore Revision 3 is issued to revise the repeat inspection cycles for fatigue crack inspection.

ACTION

Per Revision 3, all airplanes should receive a close visual inspection of each skin lap joint for corrosion not to exceed semi-anually for lap joints in lower lobe and annually for upper lobe lap joints. There is no terminating action for this inspection for corrosion damage.

Upon accumulation of 30,000 flight cycles or if this threshold has been exceeded, the aforementioned lap joints should receive a visual fatigue damage inspection and an eddy current inspection under one of the options described in the bulletin. Termination of the fatigue damage inspection is accomplished by incorporation of the preventive modification consisting of installing universal head rivets in the upper row of lap joint fasteners in conjunction with ensuring that failsafe tear straps are functional.

EFFECTIVITY

All 737 airplanes Line Number 1 thru 291

MANPOWER

Applicability	Total Man-Hours	Elapsed Time (Hours)
Inspection Part I	60	15
Part II		
Type I	40	10
Type II		
Opt A	148	37
Opt B (a)	260	65
Opt C (a)	260	65

(a) Time quoted does not include the removal of airplane interior.

MATERIAL INFORMATION

Operator-furnished parts

APPENDIX C

BOEING SERVICE BULLETIN 737-53A1039

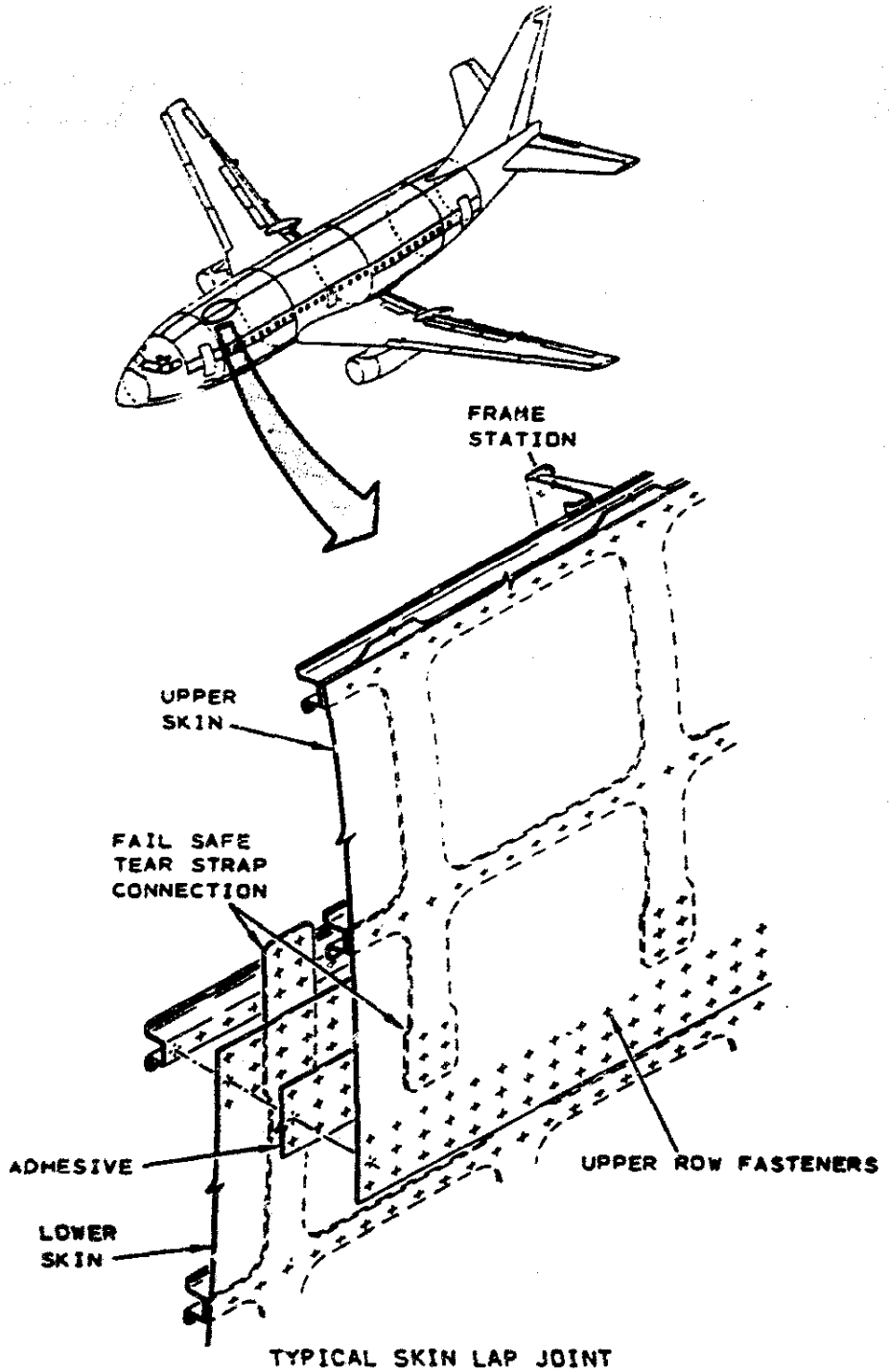

TYPICAL SKIN LAP JOINT

APPENDIX C

BOEING

BOEING COMMERCIAL AIRPLANE COMPANY P.O. BOX 3707 SEATTLE, WASHINGTON 98124

ALERT

SERVICE BULLETIN

ATA SYSTEM: 5330

737

NO: 737-53A1039
DATE: July 19, 1972
REVISION 3: August 20, 1987

SUBJECT: BODY SKIN LAP JOINT INSPECTION AND REPAIR

THIS SERVICE BULLETIN IS BEING SENT TO EACH AFFECTED OPERATOR. IF THE OPERATOR HAS LEASED AIRPLANES, THIS SERVICE BULLETIN SHOULD BE FORWARDED TO THE LESSEE. IF THE OPERATOR HAS SOLD AIRPLANES OR TRANSFERRED AFFECTED SPARES WITHIN THE LAST SIX MONTHS, THIS SERVICE BULLETIN SHOULD BE FORWARDED TO THE NEW OWNER, UNLESS CONFIRMATION HAS BEEN RECEIVED THAT BOEING HAS INCLUDED THE NEW OPERATOR ON THE DISTRIBUTION LIST.

I. PLANNING INFORMATION

A. Effectivity

1. Airplanes Affected

See Service Bulletin Index Part 3 for cross reference of Variable Number to Airplane Serial Number.

This change is applicable only to airplanes listed below.

LISTING BY CUSTOMER CODE AND VARIABLE NUMBER

ALO	PG046	PG629	PG701-PG703	PG705	PY001
	PY003	PY005			
AHW	PG036	PG331	PG577	PJ102	PL801
ANA	PG578-PG581	PG583			

LISTING BY CUSTOMER CODE AND VARIABLE NUMBER (CONTINUED)

ANS	PL802				
ARG	PH705-PH708	PH741-PH742	PY007-PY008		
ARL	PG251-PG255	PG573	PG575	PY321-PY323	
AWW	PC004				
AZE	PA001	PA003-PA004	PC003		
BRI	PJ103-PJ104	PY361-PY362			
BRT	PJ001-PJ002	PL803			
CGA	PG224				
CHI	PG572	PG574			
CLF	PA231-PA232	PG034	PG201	PG204	PG217
	PG222	PG271-PG276	PG278	PG403	PG438
CNV	PG351				
COP	PC001				
CPA	PG651-PG652	PJ031-PJ032	PJ072		
DAL	PG202-PG203	PG205	PG207	PG209	PG211-PG214
	PG216	PG218-PG221			
DLH	PY345-PY346				
EAG	PY381				
EGN	PG037	PG208	PG210	PG215	PG431
ERA	PG026	PG028-PG029			
FAT	PA002	PA005	PG055	PG226	PG228
	PG230				
FCT	PC002				
FRO	PG056	PG064	PG199	PG225	PG229
	PG432-PG433	PG441-PG442	PG621-PG628	PG630	PG704
	PL711				
IND	PH709-PH713				

LISTING BY CUSTOMER CODE AND VARIABLE NUMBER (CONTINUED)

IRN	PH731	PY021			
LAM	PH703	PY031			
LNK	PH701				
MAD	PG375				
MAL	PL716				
MID	PG279				
MXG	PC005	PG223			
NAS	PA099				
NKA	PG582				
NOR	PY301-PY304				
PAA	PG020-PG021	PG043	PG047-PG048	PG434	PY006
PEX	PA006-PA022	PG501-PG505			
PIE	PG041-PG042	PG049	PG073	PG206	PG301-PG314
	PG474	PG576			
PRS	PG332	PG401-PG402	PG436	PJ101	PX701
	PY341-PY344				
PWA	PL712				
QUE	PY002				
SAA	PG353-PG356				
SBG	PY004				
TAC	PG059	PG352			
TAN	PJ071				
TAV	PG074				
UAL	PG001-PG004	PG006-PG019	PG022-PG025	PG027	PG030
	PG032-PG033	PG038-PG040	PG044-PG045	PG051-PG054	PG057
	PG060-PG063	PG065-PG072	PG075		
VSP	PG435	PG437	PG439-PG440	PG471-PG473	PX071

LISTING BY VARIABLE NUMBER

PA001-PA022	PA099	PA231-PA232	PC001-PC005	PG001-PG075
PG199	PG201-PG230	PG251-PG255	PG271-PG279	PG301-PG314
PG331-PG332	PG351-PG356	PG375	PG401-PG403	PG431-PG442
PG471-PG475	PG501-PG505	PG571-PG583	PG621-PG636	PG651-PG652
PG701-PG705	PH701-PH715	PH731-PH732	PH741-PH742	PJ001-PJ002
PJ031-PJ032	PJ071-PJ072	PJ101-PJ104	PL711-PL712	PL716
PL801-PL803	PX071	PX701	PY001-PY008	PY021
PY031	PY301-PY304	PY321-PY323	PY341-PY346	PY361-PY362
PY381				

2. Spares Affected

None

B. Reason

The longitudinal lap joints on affected airplanes were assembled by placing a room temperature curing epoxy adhesive (BMS 5-10) between the overlapped skins prior to flush riveting the skins together.

Prior to Revision 2, seven operators had reported instances of deterioration of the adhesive used to bond the lap joints resulting in joint delamination and corrosion on thirty airplanes. This condition was found on airplanes with as low as 3,000 flight hours. The deteriorated areas varied from small isolated pockets to areas six feet or more in length. In most instances these areas were positively identified after corrosion had caused exterior skin bulges, cracks or missing fastener heads. Airplanes operating in warm moist climates were more susceptible to adhesive deterioration.

In all instances of joint deterioration reported prior to Revision 2, none had developed fatigue cracks. Some of the airplanes with large areas of delamination, had accumulated in excess of 20,000 flight cycles. Prolonged operation with large areas of delamination will eventually result in fatigue cracking.

Laboratory tests have shown that for the thinnest gage skin (.036 inch) the theoretical fatigue life of a lap joint with a large area of delamination is reduced. This reduction is attributed to the sharp knife edge of the countersink for the fastener head. Thicker gage skins exhibited a higher fatigue strength because the edge of the countersink is not a sharp edge.

Subsequent to the original issue of this bulletin the bonded lap joints were sealed in production to prevent moisture contact with the cured adhesive. Service experience with both factory sealed and operator sealed joints (Ref. Boeing Service Bulletin 737-53-1017) indicates that sealing has not been successful in preventing adhesive deterioration. Therefore, the effectivity was expanded to include all airplanes with factory sealed bonded lap joints.

Since the release of Revision 2 an operator has reported multiple fatigue cracks on three airplanes which have accumulated 40,400/42,800 flight hours and 44,700/49,900 flight cycles. Cracks were located in the upper skin at stringer four (S-4), left and right, S-10 right and S-14 right, between Body Stations 360 and 907.

Therefore, Revision 3 is issued to up-grade this service bulletin to an 'ALERT' status and to revise the repeat inspection thresholds for detecting fatigue cracking of the outer skin panel at the lap joint upper row of fasteners.

C. Description

The inspection and repair of specified skin lap joints per this service bulletin is divided into two parts. Part one is for corrosion and Part two is for fatigue.

Part I, corrosion inspection and protection calls for a close visual external inspection of skin lap joints for skin bulges, cracks and/or missing fastener heads indicating substantial corrosion, and from the airplane exterior an application of a corrosion inhibitor (Ref. BMS 3-23). The frequency of Part I inspection should be based on operator's own experience but should not exceed six month intervals for lower lobe lap joints and one year intervals for upper lobe lap joints. There is no terminating action for Part I inspection.

Part II fatigue damage inspection of the lap joints at Stringers 4, 10, 14, 19, 20, and 24 is to commence upon the accumulation of 30,000 flight cycles as indicated below.

Two types of inspection are called for:

Type I - An external close visual inspection of the critical upper row of fastener holes for cracks at each lap joint where the outer skin gage is less than 0.056 inch.

Type II - A high frequency eddy current inspection (NDT) of the skin adjacent to the fastener heads of the critical upper row of lap joint fasteners at each lap joint for cracks where the outer skin gage is less than 0.056 inch and a visual inspection of the tear straps, as noted in the options below.

For affected airplanes which have accumulated 30,000 flight cycles or more, perform the Type I inspection at next 'C' check, but not to exceed 4,500 flight cycles after receipt of Revision 3 of this service bulletin. If no cracks are found, repeat Type I inspection at 4,500 flight cycles intervals until the threshold for Type II inspection is reached. Type II inspection consists of three options, all with initial thresholds at the next Major Structural Maintenance Period (D check) after reaching 30,000 flight cycles but within 10,000 cycles of receipt of Revision 3 of this service bulletin.

PLEASE REPORT YOUR PLANNED ACTION AND INSPECTION RESULTS TO BOEING CUSTOMER SUPPORT AS SOON AS EACH INSPECTION IS COMPLETE.

CONTACT: BOEING COMMERCIAL AIRPLANE COMPANY
ATTENTION: MANAGER, AIRLINE SUPPORT

NOTES: 1. Contact Boeing for instructions if any damaged areas exceed the specified limits. To expedite Boeing response, be specific when defining and locating the damage. Circumstances leading up to the damage and any secondary effects, when known, should be included in the communication and followed up by sketches and photographs when appropriate. In addition, where corrosion is involved, length, width, and greatest depth of clean-up are required.

CONTACT: BOEING COMMERCIAL AIRPLANE COMPANY
ATTENTION: MANAGER, AIRLINE SUPPORT

2. Prior or concurrent incorporation of Service Bulletin 737-53A1042, "Lower Lobe Hot-Bonded Skin Panel Inspection, Repair, and Panel Replacement", is recommended on commonly affected airplanes.

L. Approval

This service bulletin has been reviewed by the Federal Aviation Administration (FAA) and the (repairs and) modifications herein comply with the applicable Federal Aviation Regulations (FAR's) and are FAA approved.

E. Manpower

Approximate man-hours and a crew size for individual tasks are as follows:

Operation	Crew Size (Men)	Man-Hours	Elapsed Time (Hours)
Inspection			
Part I	4	60	15
Part II			
Type I	4	40	10
Type II			
Option A	4	148	37
Option B (a)	4	260	65
Option C (a)	4	260	65
Fatigue and/or Corrosion Repair	(a)	(a)	(a)

(a) Time quoted does not included the removal of airplane interior.

(b) Dependent on number, location and size of repairs required.

F. Material - Price and Availability

It is recommended that the parts and materials identified in Paragraph II.A be furnished or fabricated from operator's existing stock or purchased directly from industry sources. Accordingly, price and delivery data is not included in support of this bulletin.

G. Tooling - Price and Availability

1. Eddy current testing equipment, Visu-Lok installation tools and Unisink Head Bulbed Cherrylock installation tools may be needed depending on operator's course of action. If such equipment is desired, it is recommended that it be furnished from operator's existing inventory or purchased directly from industry sources. Accordingly, price and delivery data is not included in support of this bulletin.

2. The tool identified in Paragraph II.C.5 may be obtained through: Monarch Marking Systems
P.O. Box 608
Dayton, Ohio 45401

Part Number	Quantity	Price
PRY-1	1 tool per Package	$2.95
PRY-4	4 tools per Package	$9.50

H. Weight and Balance

Change in weight and balance will depend on number, type and size of repairs and amount of sealant (Ref. BMS 5-95) and/or corrosion inhibitor (Ref. BMS 3-23) applied.

I. References

1. Existing Data:

a. Structural Repair Manual D6-15565, Subjects 51-10-2, 53-30-1, 53-30-2, 53-30-4 and 53-30-4

b. Boeing Nondestructive Test Manual, Document D6-37239, Part 1 and Part 6

c. Boeing Service Bulletin 737-53-1017, "Sealing of Cold-Bonded Structure For Corrosion Protection"

d. Boeing Service Bulletin 737-53A1042, "Lower Lobe Hot-Bonded Skin Panel Inspection Repair, and Panel Replacement"

e. Boeing Corrosion Prevention Manual Part 1, Section 20-60-00

2. New or revised data supplied in support of this service bulletin:

None

J. Publications Affected

The modification described herein affects the following publication:

Publication	Chapter-Section
737 Structural Repair Manual.....	53-30

II. MATERIAL INFORMATION

A. Parts Required Per Airplane

NOTE: All of the following may be required depending on operator's course of action.

Quantity	Part Number	Nomenclature
As Required	See Structural Repair Manual, Subject 53-30-4	Sealant
As Required	BMS 3-23 or equivalent	Water Displacing Corrosion Inhibiting Compound
As Required	NAS1398D8-( )	Blind Rivet
As Required	PLT1007-6-( )	Visu-Lok Blind Fastener
As Required	CR 2235-6-( )	Unisink Head Bulbed Cherrylock
As Required	MS20470D5-5	Rivet
As Required	BMS 5-95, Class B	Sealant

Vendor Information

Boeing Part No.	Vendor Part No.	Vendor
-	PLT1007-6-( )	The National Screw and Mfg. Co. 3423 S. Garfield Ave. Los Angeles, Calif. 90022
-	CR 2235-6-( )	Townsend Co. Cherry Rivet Div. 1224 E. Warner Ave. Santa Ana, Calif. 92707

B. Parts Required to Modify Spares

None

C. Special Tools and Equipment Required

1. Low frequency eddy current inspection instruments for corrosion loss measurement are listed in the Boeing Nondestructive Test Manual D6-37239, Part 6, 51-00-00, Figure 5.

   Two corrosion reference standards fabricated from 0.036 inch and 0.040 inch clad aluminum sheet are required to perform corrosion loss measurements.

2. Power tools may be used to install Visu-Lok fasteners. For applicable tools contact the National Screw & Mfg. Co.

3. The following tools may be used to install Unisink head Bulbed Cherrylock fasteners:

Pull Gun:	G-684
Flush Fastener Pull Head:	H681-6C
Vendor:	Townsend Co., Cherry Rivet Div. 1224 E. Warner Ave. Santa Ana, Calif. 92707

4. The following equipment has been tested and found satisfactory for blind application of corrosion inhibitor and is to be operator fabricated. Equivalent operator designed equipment may also be used as long as it is designed to apply only the minimum amount of corrosion inhibitor required to saturate the void and to prevent contamination of insulation materials. This equipment is for use with the one row blind fastener joint refastening method detailed in Part IV - Repair Data.

5. The following tool is suitable for use in Part III - Tear Strap Inspection for disbond.

Nomenclature	Part Number
Econo-Pry	PRY-1 or PRY-4

   An equivalent tool may be used at operator's discretion.

Equipment - Method I (Optional to Method II)

1. Four ounce pump type oilcan modified to incorporate a stop, stop screw, spring and special nozzle. Fabricate per Figure 3.

2. Lap joint sample for practice and stop adjustment. Fabricate per Figure 4.

Equipment - Method II (Optional to Method I)

NOTE: To reduce application time, it is suggested that this equipment be made in quantity so that several upper row fastener holes in the repair area may be treated simultaneously.

1. Applicator tip, stop collar and a length of clear plastic tubing. Fabricate and assemble per Figure 5.

2. Determine outer skin thickness (737 Structural Repair Manual Subject 53-30-2, Figure 2 and Figure 3).

D. Existing Parts Accountability

None

III. ACCOMPLISHMENT INSTRUCTIONS

NOTES: 1. The following program outlines the minimum requirements for maintaining the structural integrity of skin lap joints. The inspection for corrosion will detect severe corrosion requiring repair by installing repair doublers. The inspection for fatigue damage will detect large fatigue cracks (0.25 inch in length and greater) emanating from upper row fastener holes. These cracks will be large enough to require repair by installation of repair doublers. In the following inspections each panel is treated as a separate entity and the inspection results of one panel reliably cannot be used to indicate the condition of another.

2. On the figures, unless otherwise specified:

- All linear dimensions are in inches
- Tolerance on linear dimensions other than rivet and bolt edge margin is plus or minus 0.03
- Tolerance on rivet and bolt edge margin is plus or minus 0.05
- Angular tolerance is plus or minus 2 degrees
- Hole size for standard solid rivets is per 737 Structural Repair Manual Chapter 51

Part I - Corrosion Inspection and Repair

On all airplanes, accomplish the following corrosion inspection and application of corrosion inhibitor BMS 3-23 or equivalent (Ref. Corrosion Prevention Manual Part 1, Section 20-60-00) at six month intervals on lower lobe joints and one year intervals on upper lobe joints.

A. Visually inspect external surface of each lap joint for skin bulges adjacent to fasteners, skin cracks caused by severe corrosion, dished fastener heads or missing fastener heads between Body Station 178 and 1016 (See Figure 1).

B. If corrosion indications noted in Step A are found, determine extent of corrosion damage for full length of the panel joint. Extent of damage may be determined using low frequency eddy current inspection (Ref. 737 Nondestructive Test Manual D6-37239, Part 6, 51-00-00 Figure 5) or by any other suitable means.

C. Corrosion may be removed by local blend out if the blend out depth does not exceed 10 percent of the skin thickness except as follows:

1. In small local areas not exceeding 3 inches in length in any 20 inches of joint, a skin thickness reduction of 20 percent is acceptable.

2. In smaller areas not exceeding 1.5 inches in length in any 20 inches of joint a skin thickness reduction of 40 percent is acceptable. In areas where skin thickness is reduced by 40 percent it is suggested that a faying surface sealed shim and oversize protruding head fasteners be installed if there are existing fastener holes in the rework area. After corrosion removal refasten the joint per 737 Structural Repair Manual Subject 53-30-1, Figure 5, Method II or III.

3. Corrosion exceeding the above limits should be repaired per 737 Structural Repair Manual Subject 53-30-3.

D. In panel lap joint areas where no corrosion indications are found, apply corrosion inhibitor to joint external edge and fastener external heads in joint (Ref. 737 Structural Repair Manual Subject 51-10-2). For maximum penetration, it is suggested that corrosion inhibitor be applied to the joint edge under pressure using equipment such as an airless paint spray pump.

NOTE: Fillet seal along the edge of the lap joint prevents corrosion inhibitor application to the joint edge, but need not be removed unless deteriorated.

E. After corrosion inhibitor becomes tacky, excess may be removed (Ref. 737 Structural Repair Manual Subject 51-10-2).

<u>Part II - Fatigue Damage Inspection and Repair</u>

On all airplanes accomplish the following Type I and Type II inspections for fatigue cracks in lap joints at Stringers 4, 10, 14, 19, 20, and 24 where the joint outer skin gage is less than .056 inch at the initial thresholds indicated in Paragraph I.C. Description.

Type I Inspection

A. With the aid of a bright light, visually inspect the lap joint exterior body skin, forward and aft of the fastener heads in the upper row fasteners for fatigue cracks (See Figure 1).

B. If any crack is found, eddy current inspect the skin adjacent to all joint upper row fastener heads the full length of the panel in which crack(s) were found. See 737 Nondestructive Test Manual D6-37239, Part 6, Subject 53-30-03 for inspection equipment and technique.

C. Repair fatigue cracks using a repair similar to that shown in 737 Structural Repair Manual Subject 53-30-3, Figure 16, and replace all remaining upper row flush joint fasteners in that panel joint with oversize protruding head solid fasteners per Part IV - Repair Data. This in conjunction with Part III - Tear Strap Inspection and Repair is terminating action for Part II inspections for the affected panel.

D. In skin panels where no fatigue cracks are found, repeat inspection every 4500 flight cycles until the threshold for Type II inspection is reached. Panel reinspection per Part II for fatigue cracks may be deferred for the fatigue life increment stated for the particular fastener by accomplishing blind fastener installation per Part IV - Repair Data or may be terminated by replacing the existing upper row of flush joint fasteners with standard protruding head solid fasteners per Part IV - Repair Data and accomplishing Part III - Tear Strap Inspection and Repair. However, Part I - Corrosion Inspection is to be continued.

Type II Inspection

A. Accomplish a high frequency eddy current inspection (NDT) for cracks in the lap joint exterior body skin, forward and aft of the fastener heads in the upper row of fasteners (See Figure 1) using one of the following three options. See 737 Nondestructive Test Manual D6-37239, Part 6, Subject 53-30-3.

NOTE: After accomplishment of first high frequency eddy current inspection, notify Boeing Customer Support of inspection results. This information is requested to aid in determination of future changes to this service bulletin.

Contact: Boeing Commercial Airplane Company
Attention: Manager, Airline Support

<u>Option A</u> - At next major Structural Maintenance Period (D check) after reaching 30,000 flight cycles, but within 10,000 flight cycles after receipt of Revision 3 of the service bulletin and at 20,000 flight cycles intervals thereafter, accomplish the following:

1. Accomplish NDT inspection of the critical upper row of fasteners for each skin lap joint.

2. If no cracks are found, accomplish Type I inspection after 6,000 flight cycles and thereafter at 3,000 flight cycle intervals until next NDT. Panel reinspection per Part II may be deferred for the fatigue life increment stated for the particular fastener by accomplishing blind fastener installation per Part IV - Repair Data or may be terminated by replacing the existing upper row of fasteners with protruding head solid fasteners per Part IV - Repair Data and accomplishing Part III - Tear Strap Inspection and Repair.

3. If cracks are found, accomplish repair similar to that shown in 737 Structural Repair Manual Subject 53-30-3, Figure 16 and replace all remaining upper row fasteners in that panel joint with protruding head solid fasteners per Part IV - Repair Data and accomplish Part III - Tear Strap Inspection and Repair. This constitutes terminating action for Part II Fatigue Damage Inspection for the affected panel.

Option B - At next major Structural Maintenance Period (D check) after reaching 30,000 flight cycles, but within 10,000 flight cycles after receipt of Revision 3 of this service bulletin and at 20,000 flight cycle intervals thereafter, accomplish the following:

1. Accomplish NDT inspection of the critical upper row of fasteners for each skin lap joint, and accomplish Part III - Tear Strap Inspection and Repair.

2. If no cracks are found and tear strap bond is intact, accomplish Type I inspection at 6,000 flight cycle intervals until next NDT inspection at prescribed threshold, or defer inspection for the fatigue life increment stated for the particular fastener by accomplishing blind fastener installation per Part IV - Repair Data or terminate inspection by replacing the existing upper row of fasteners with protruding head solid fasteners per Part IV - Repair Data.

3. If cracks are found in the fastener row, accomplish a repair similar to that shown in 737 Structural Repair Manual Subject 53-30-3, Figure 16 and replace all remaining upper row fasteners in that panel joint with protruding head solid fasteners per Part IV - Repair Data. This in conjunction with functional tear straps is terminating action for Part II inspections for the affected panel.

Option C - At next major Structural Maintenance Period (D check) after reaching 30,000 flight cycles, but within 10,000 flight cycles after receipt of Revision 3 of this service bulletin and at 10,000 flight cycle intervals thereafter, accomplish the following:

1. Accomplish NDT inspection of the critical upper row of fasteners for each skin lap joint and accomplish Part III - Tear Strap Inspection and Repair at alternate NDT inspection, for panels with no cracks or tear strap disbond or with repaired tear straps.

2. If cracks are found in the fastener row, accomplish repair similar to that shown in 737 Structural Repair Manual Subject 53-30-3, Figure 16 and replace all remaining upper row fasteners in that panel joint with protruding head solid fasteners per Part IV - Repair Data. This in conjunction with functional tear straps is terminating action for Part II inspections for the affected panel.

3. If no cracks are found, Part II inspection for the affected panel may be terminated by replacing the upper row of fasteners in the panel joint with protruding head solid fasteners per Part IV - Repair Data and ensuring functional tear straps.

B. If blind rivets are installed or have been previously installed for fatigue life improvement, these lap joints are subject to the above Type I and Type II Inspection when the life improvement intervals stated in Part IV of this service bulletin are exceeded.

In addition, if blind rivets are installed or have been previously installed, accomplish a one-time tear strap inspection and repair per Part III - Tear Strap Inspection and Repair at next Major Structural Maintenance Period (D check).

C. Part I - Corrosion Inspection is to be continued per this service bulletin regardless of actions taken per Type II Inspections.

Part III - Tear Strap Inspection and Repair

On all airplanes, accomplish the following delamination and/or corrosion inspection as required per the instructions in Part II - Fatigue Damage Inspection and Repair.

A. Gain access to the interior side of the airplane skin.

B. Visually inspect the bond edge of the doubler/tear strap for signs of delamination and/or corrosion (See Figure 2).

NOTE: If disbond is suspected, insert tool (ST) between skin and strap. Pushing out on skin panel may be required for tool insertion. Twist tool to confirm disbond and to inspect for corrosion.

C. If corrosion is found, remove per Part I.

D. In strap areas where disbond and/or corrosion has been found and/or removed, refasten strap per Figure 2, Detail I.

Part IV - Repair Data

The following repairs are used to restore the fatigue life of a delaminated joint area or to refasten a joint separated for corrosion removal. The Method III fastener repair per 737 Structural Repair Manual Subject 53-30-1 is a permanent repair which replaces the existing flush fasteners in the lap joint upper row with oversize protruding head rivets and may be used as a preventive modification. The one row blind fastener repair is similar to the aforementioned fastener repair except blind fasteners are used. This repair is life limited depending on the type of fastener used and the gage of the outer skin at the joint. After installation, the blind fasteners should be regularly inspected for looseness or working. After they have been in service for the stated period, a fatigue crack inspection as detailed in Part II should be initiated in the repair area. The blind fasteners may be replaced with protruding head solid rivets in conjunction with fatigue crack inspection and Part III - Tear Strap Inspection and repair for terminating action for Part II inspections.

When accomplishing the Method III fastener repair per 737 Structural Repair Manual (SRM) Subject 53-30-01 as a preventive modification on airplanes that have exceeded 40,000 flight cycles, perform a high frequency eddy current inspection of the lap joint open holes before oversizing for protruding head rivets. If cracks are found, repeat eddy current inspection of hole after oversizing to assure crack removal. Airplanes previously modified per SRM, Method III solid rivet fastener repair, received terminating action and do not require further Fatigue Damage Inspection.

NOTE: The following repairs may not be used in corroded areas where the skin thickness would be less than .032 inch after corrosion removal. For repair of corroded areas exceeding this limit, see 737 Structural Repair Manual Subject 53-30-1, Figure 5, Method II or III.

A. One Row Standard Fastener Repair

1. If joint was separated, remove loose adhesive, apply brush on chemical film treatment (Alodine or Iridite) and one coat of chemical and solvent resistant primer to metal faying surfaces. Afte primer has dried, apply sealant to faying surfaces. See 737 Structural Repair Manual Subject 53-30-4 for faying surface sealants.

2. If joint was not separated, inject as much corrosion inhibitor as possible into the joint. See 737 Structural Repair Manual Subject 51-10-2 for corrosion inhibitor application.

3. Install fasteners, see 737 Structural Repair Manual Subject 53-30-1, Figure 5 Method III, and inspect tear strap.

B. One Row Blind Fastener Repair (life limited)

This repair is life limited. The following fatigue lives were established by testing which assumed the absence of bond, fatigue cracks and corrosion and are to be calculated from the time blind fasteners are installed in the joint. If blind rivet NAS1398D8-( ) is installed, a fatigue life improvement of approximately 15,000 flight cycles may be expected. If Visu-Lok blind rivet PLT1007-6-( ) of Unisink Head Bulbed Cherrylock CR 2235-6-( ) is installed a fatigue life improvement of approximately 30,000 flight cycles may be expected. Blind fasteners should be inspected for looseness or working at regular major maintenance intervals to ensure that the indicated fatigue life is achieved. Inspect fastener locations for fatigue cracks per Part II after flight cycle extension has been reached, unless replacement with standard fasteners per Part IV.A is accomplished.

1. Remove existing upper row rivet if it is 3/16 inch diameter or smaller.

NOTE: If existing fastener is steel or, larger than 3/16 inch diameter, removal is not required, as this location will have a satisfactory fatigue life.

2. Enlarge existing hole with, Size F (0.257 inch diameter) drill if blind rivet BAS1398D8-( ) is to be installed, No. 3 (.213 inch diameter) drill if Visu-Lok blind rivet PLT1007-6-( ) is to be installed, or No. 5 (.205 inch diameter) drill if Unisink Head Bulbed Cherrylock CR 2235-6-( ) is to be installed. Careful hole drilling is advised to keep hole diameter as close to minimum as possible.

   NOTE: Visu-Lok blind rivet PLT1007-6-( ) or Unisink Head Bulbed Cherrylock CR 2235-6-( ) may be used to replace 5/32 inch diameter rivets only. For replacement of 3/16 inch diameter rivets use blind rivet NAS1398D8-( ).

3. To achieve the maximum service life associated with blind fastener installation, it is essential that no corrosion be present. It is suggested that corrosion inhibitor be applied to joint faying surface through each open fastener hole using equipment similar to that detailed in Paragraph II.D.4. After application, remove all traces of corrosion inhibitor from external skin surface using a 1:1 mixture of methyl ethyl ketone and toluene.

   NOTES:
   1. Contamination of insulation blankets with corrosion inhibitor is not to be permitted.
   2. Corrosion inhibitor application restrictions detailed in 737 Structural Repair Manual Subject 51-10-2 concerning application in the vicinity of oxygen systems must be observed.
   3. For full width delaminations both external and blind internal application of corrosion inhibitor is suggested.
   4. Application by aerosol can has been found to be unsatisfactory for blind application due to the likelihood of over-saturation from an uncontrolled spray and possible contamination of insulation blankets. However, it is satisfactory for external application where full width delaminations are found and excess amounts of corrosion inhibitor may be wiped up.

4. Install blind rivet NAS1398D8-( ), Visu-Lok blind rivet PLT1007-6-( ) of Unisink Head Bulbed Cherrylock CR 2235-6-( ) as applicable with wet sealant (Ref. BMS 5-95) under rivet head.

APPENDIX C

BOEING SERVICE BULLETIN 737-53A1039

Illustration Table of Contents

Title	Page
Figure 1. Lap Joint Inspection	23
Figure 2. Tear Strap Inspection	26
Figure 3. Blind Corrosion Inhibitor Applicator - Method I	28
Figure 4. Lap Joint Sample	31
Figure 5. Blind Corrosion Inhibitor Applicator - Method II	32

APPENDIX C

BOEING SERVICE BULLETIN 737-53A1039

THIS PAGE INTENTIONALLY LEFT BLANK

APPENDIX C

BOEING SERVICE BULLETIN 737-53A1039

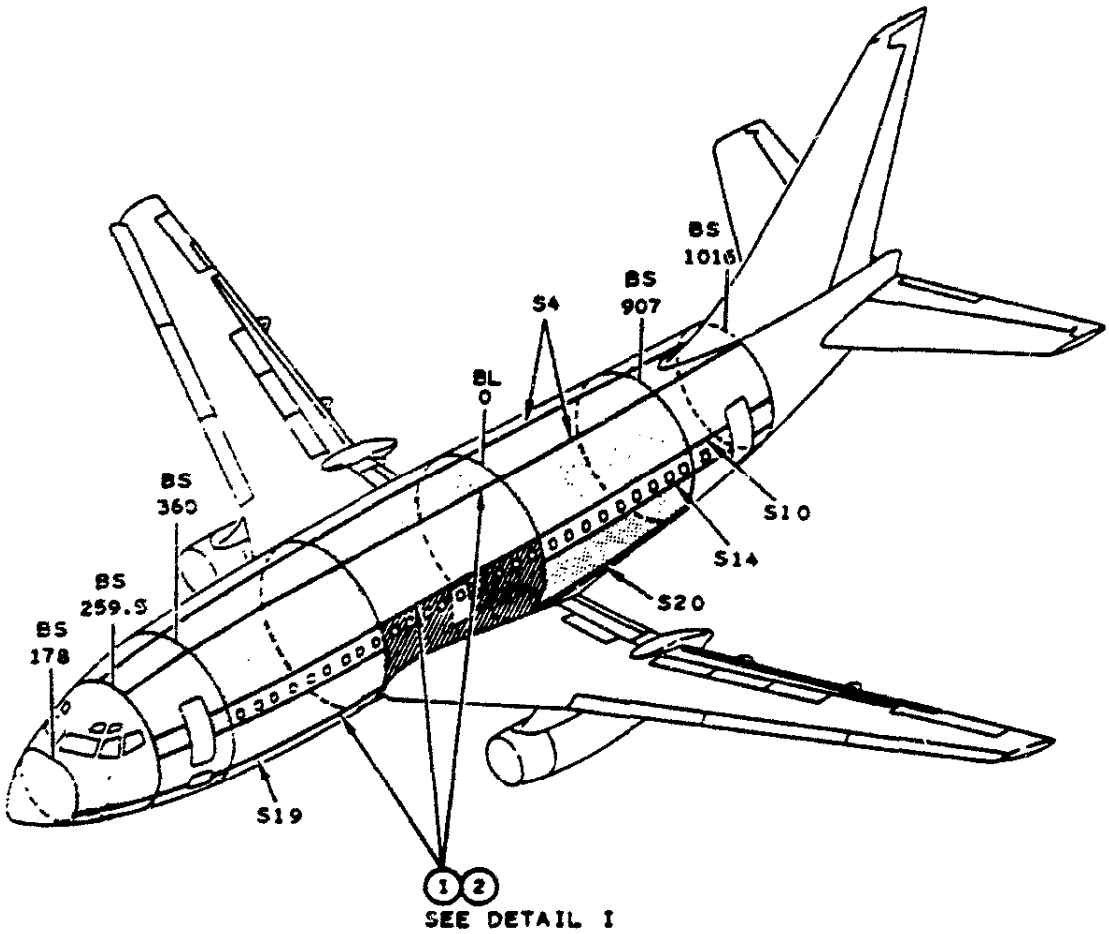

FIGURE 1. LAP JOINT INSPECTION

APPENDIX C

BOEING SERVICE BULLETIN 737-53A1039

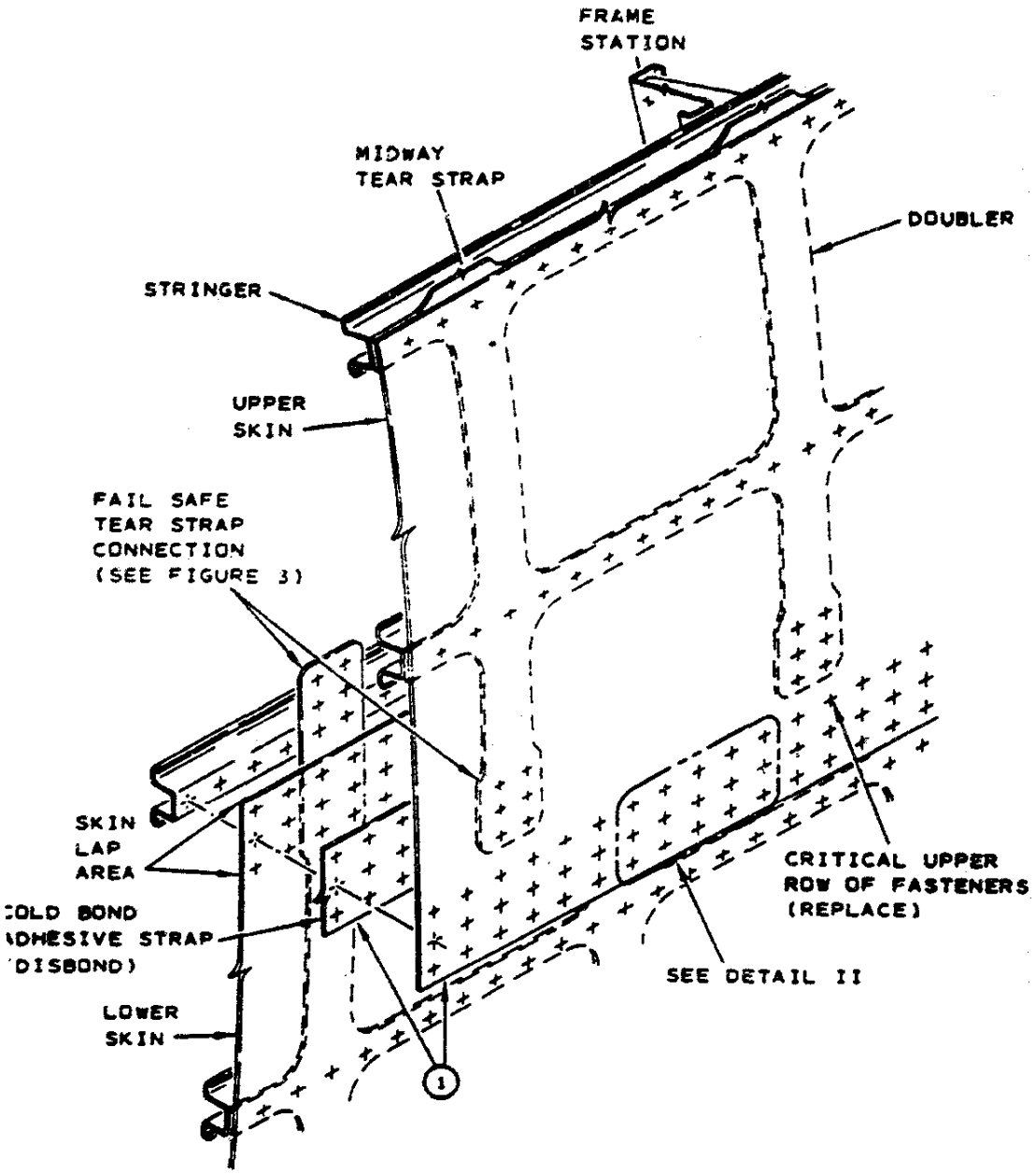

DETAIL I
TYPICAL SKIN LAP JOINT

FIGURE 1. LAP JOINT INSPECTION

APPENDIX C

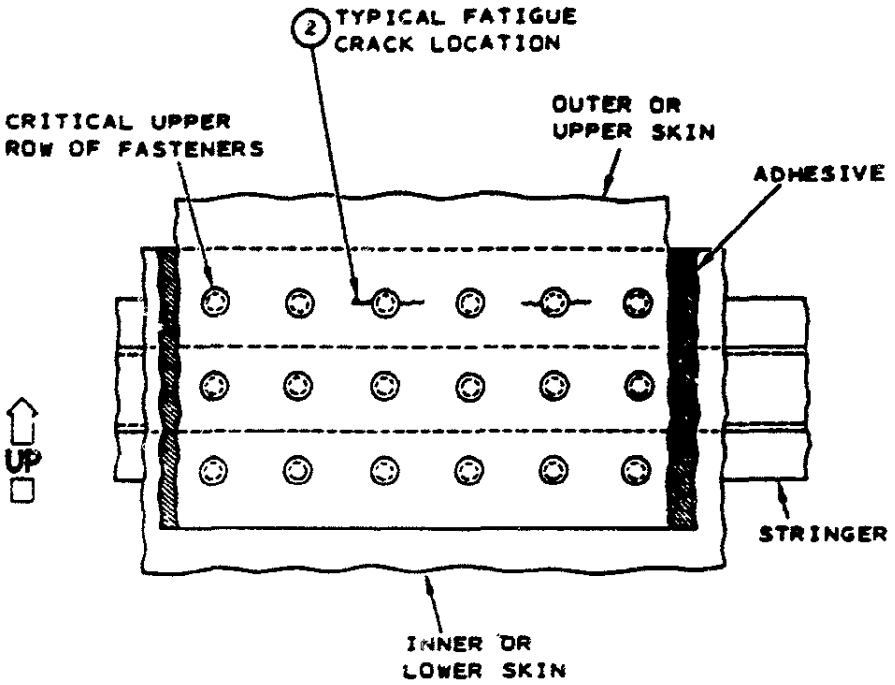

DETAIL II

(1) Accomplish Part I Visual Inspection of skin panel lap joints for corrosion and/or delamination, located at Stringers 4, 10, 14, 19, 20, and 24.

(2) Accomplish Part II Inspection of the lap joint upper row of fasteners.

FIGURE 1. LAP JOINT INSPECTION

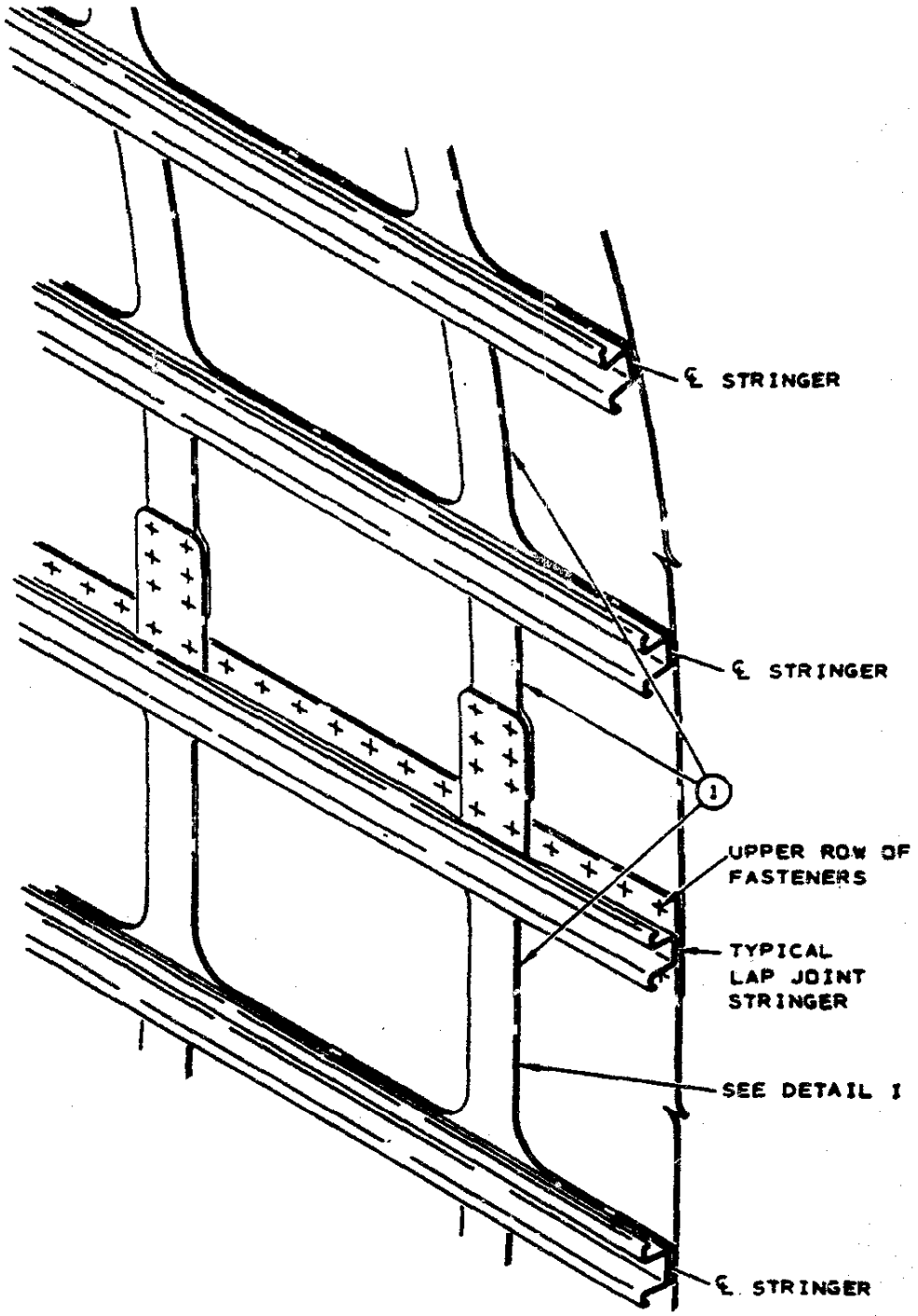

FIGURE 2. TEAR STRAP INSPECTION AND REPAIR

APPENDIX C

BOEING SERVICE BULLETIN 737-53A1039

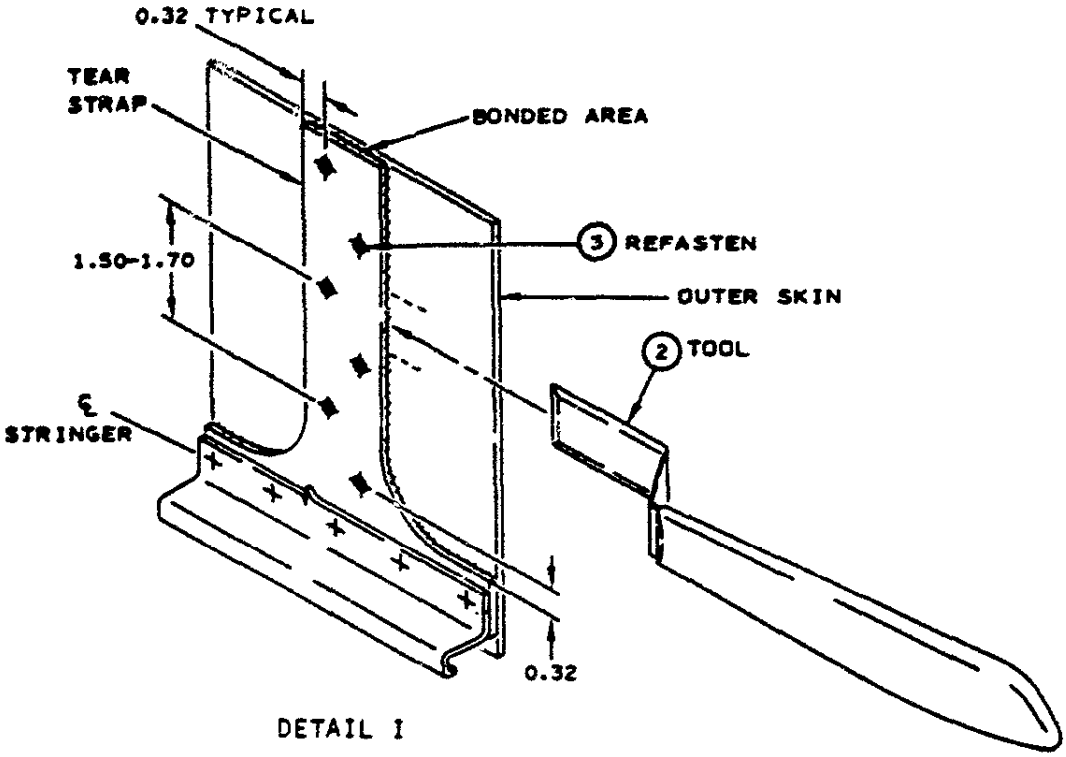

DETAIL I

1. Perform close visual inspection of the bonded edge of the tear strap for disbond and/or corrosion, over a minimum tear strap length of 2 stringer bays above and 1 stringer bay below the lap joint.

2. If corrosion or disbond is suspected, insert tool (ECONO-PRY or equivalent) between skin and strap to determine if strap is disbonded or if corrosion has occurred. An outward push on skin while inserting tool will aid in identification of weak or disbonded tear strap connections.

3. Drill 0.159-0.171 diameter hole at locations shown and install fastener MS20470D5-5 wet with sealant (Ref. BMS 5-95).

FIGURE 2. TEAR STRAP INSPECTION AND REPAIR

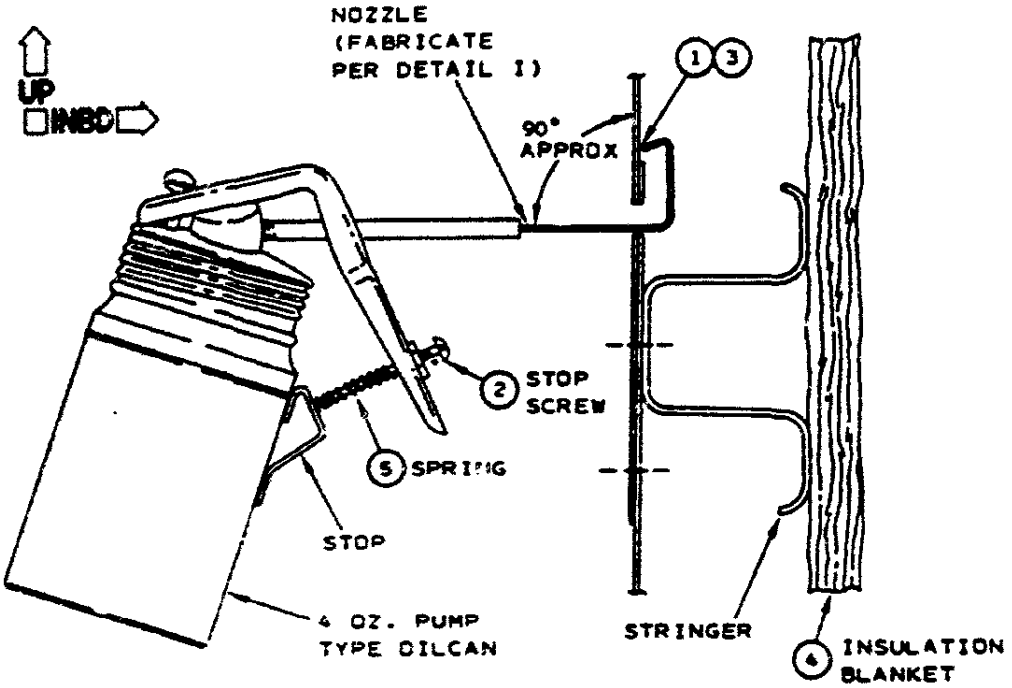

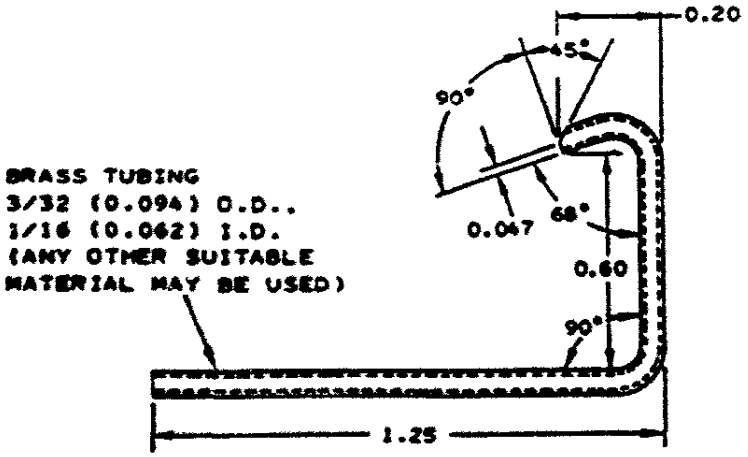

DETAIL I

FIGURE 3. BLIND CORROSION INHIBITOR APPLICATOR - METHOD I

APPENDIX C

(1) End of nozzle should contact skin for proper application.

(2) Adjust stop screw so that one pump stroke will discharge 0.10 to 0.15 cubic centimeters of corrosion inhibitor.

(3) Apply a maximum of 0.15 cubic centimeters of corrosion inhibitor to upper edge of joint at each upper row fastener hole where a blind fastener will be installed. Rate of application should approximately equal rate at which corrosion inhibitor flows down the skin onto the joint for maximum joint saturation. Correct application rate is established by trial application using a joint sample fabricated per Figure 4.

(4) Splattering of corrosion inhibitor on insulation blankets is not to be allowed.

(5) Spring aids in controlling application rate.

FIGURE 3. BLIND CORROSION INHIBITOR APPLICATOR - METHOD 1

APPENDIX C

BOEING SERVICE BULLETIN 737-53A1039

THIS PAGE INTENTIONALLY LEFT BLANK

APPENDIX C

BOEING SERVICE BULLETIN 737-53A1039

✛ DRILL NO.21 (0.159 INCH DIAMETER) HOLE AND INSTALL RIVET BACR15CE5D( ).

● DRILL NO.5 (0.205 INCH DIAMETER) HOLE.

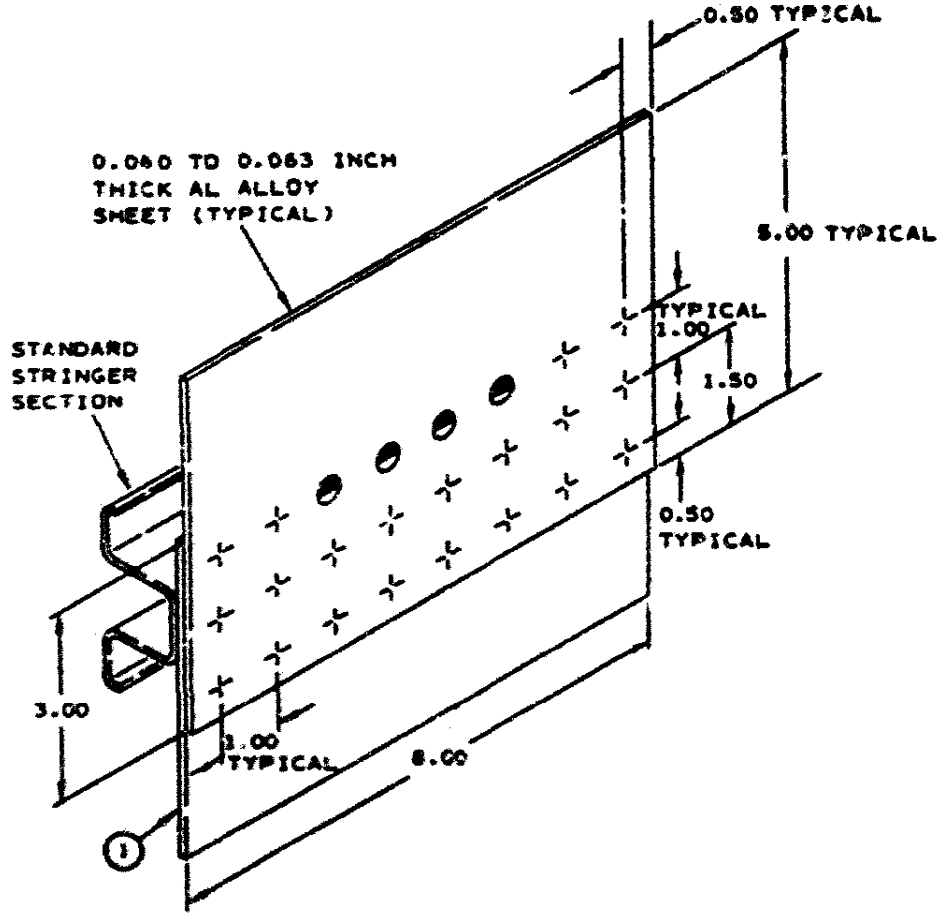

(1) Fabricate 'Lap Joint Sample' as shown (used for adjustment and practice of applying corrosion inhibitor by Method I).

FIGURE 4. LAP JOINT SAMPLE

APPENDIX C

BOEING SERVICE BULLETIN 737-53A1039

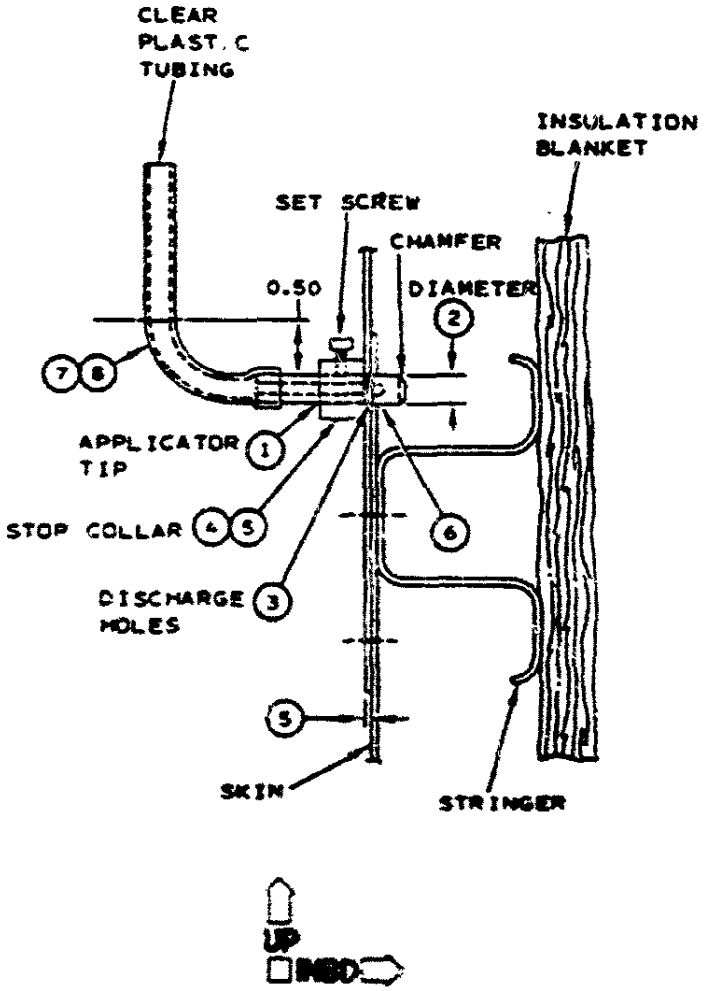

FIGURE 5. BLIND CORROSION INHIBITOR APPLICATOR - METHOD II

APPENDIX C

BOEING SERVICE BULLETIN 737-53A1039

TOOL FABRICATION INSTRUCTIONS

1. Make applicator tip from any convenient non-metallic material either solid or hollow. If solid material is used, drill a hole for the majority of its length as shown. If hollow material is used, suitably plug one end.

2. Diameter of tip dependent on hole size in skin and tip material. Fit of tip in hole should be a light interference fit to preclude an appreciable amount of corrosion inhibitor flowing past the tip and down the inner surface of the skin. The intent is to hold the corrosion inhibitor supply at the faying surface. Correct tip diameter is best determined experimentally.

3. Drill four 0.03 dia. discharge holes 90 degrees apart.

4. Make stop collar from any suitable metallic or non-metallic material and install set screw.

TOOL USAGE INSTRUCTIONS

5. Determine outer skin thickness at hole and adjust stop collar so that distance from center of discharge holes to stop collar equals outer skin thickness.

6. Insert tip into fastener hole until stop contacts skin.

7. Fill clear plastic tubing with corrosion inhibitor to a level approximately 0.5 inch above discharge holes.

8. Allow tool to remain in place for approximately 5 minutes to achieve maximum penetration. A visually apparent drop in fluid level may or may not occur depending on void size and gap between the skins. If the gap between the skins is very small the fluid level may not appear to drop. However, tests indicate that the void area is nevertheless saturated with corrosion inhibitor and therefore the lack of a visual drop in fluid level is unimportant.

FIGURE 5. BLIND CORROSION INHIBITOR APPLICATOR - METHOD II

APPENDIX C

BOEING NONDESTRUCTIVE TEST,737NDT. 53-30-03

BOEING COMMERCIAL JET

EFFECTIVITY
MODEL: ALL SERVICE BULLETIN REFERENCE: 53A1039

NONDESTRUCTIVE TEST

PART 6 - EDDY CURRENT

LONGITUDINAL LAP JOINTS - WITHOUT FASTENER REMOVAL

1. Purpose

   A. To find cracks in the critical (upper) row of fasteners of longitudinal skin lap joints using high frequency eddy current, without removal of fasteners.

   B. The cracks usually start on the inner surface of the outer skin at the edge of the countersink. From there they propagate out along the faying surface. See Fig. 3 for an illustration of a typical crack. This inspection can find cracks 0.040 inch or longer beneath the countersunk fastener heads in skin of 0.036 inch and 0.040 inch thick.

   NOTE: A procedure for use with fasteners removed is Part 6, 53-30-00, Fig. 1.

2. Equipment

   NOTE: Refer to Part 1, 51-06-00 for information on equipment manufacturers.

   A. Any eddy current instrument that can operate at 100 kHz and satisfy the performance requirements of this procedure may be used. The following equipment was used in the development of this procedure:

      (1) Magnatest ED-520 Magnaflux Corp.

      (2) MIZ-10A, MIZ-10B, Zetec Inc.

      (3) Locator UH, Hocking Instruments

   B. Probe--Use one of the following or similar probe:

      (1) 0.125 inch diameter, 3 inch long shielded pencil probe, P/N MP-30, NDT Product Engineering

      (2) 0.187 inch diameter, 3 inch long unshielded pencil probe, P/N UP-30, NDT Product Engineering

      (3) Unshielded locator probe, P/N 29P101, Hocking Instruments

   C. Reference Standard -- Refer to Fig. 1.

   D. Probe Guide -- Draftsman Circle Template. Refer to Fig. 2.

APPENDIX C

BOEING COMMERCIAL JET

NONDESTRUCTIVE TEST

3. Preparation for Inspection

A. Make sure the inspection area is clean.

B. Locally remove thick paint as necessary only to find the rivet heads. Paint removal is not required to do the inspection.

4. Instrument Calibration

A. Do the initial calibration. Refer to Part 6, 51-00-00, Fig. 4. Set Locator UH to inspect aluminum.

B. Put the probe guide on the reference standard.

C. Visually center one of the holes around the rivet head. Choose a hole that positions the pencil probe to scan the edge of the countersink. Refer to Fig. 2. The hole chosen should give the best detection of the artificial crack in the countersink of the reference standard. Identify the hole selected on the probe guide.

D. With the probe guide held firmly in place, scan around the circumference of the rivet head. Monitor instrument response. The operator should be able to clearly identify between the sudden instrument response from the reference standard crack and the slow instrument response from an off center condition.

E. Set the instrument sensitivity to clearly identify the reference standard crack but so the needle does not move suddenly off scale as the probe is moved around the fastener head.

5. Inspection Procedure

A. Identify the fastener location to be inspected.

B. Center the probe guide hole around the rivet head.

C. Scan around the head with the pencil probe while monitoring the eddy current instrument

D. Identify on the fuselage any locations which give an instrument response that is equivalent to the reference standard crack response.

6. Inspection Results

A. Refer to Pt. 6, 51-00-00, Fig. 4.

BOEING COMMERCIAL JET

NONDESTRUCTIVE TEST

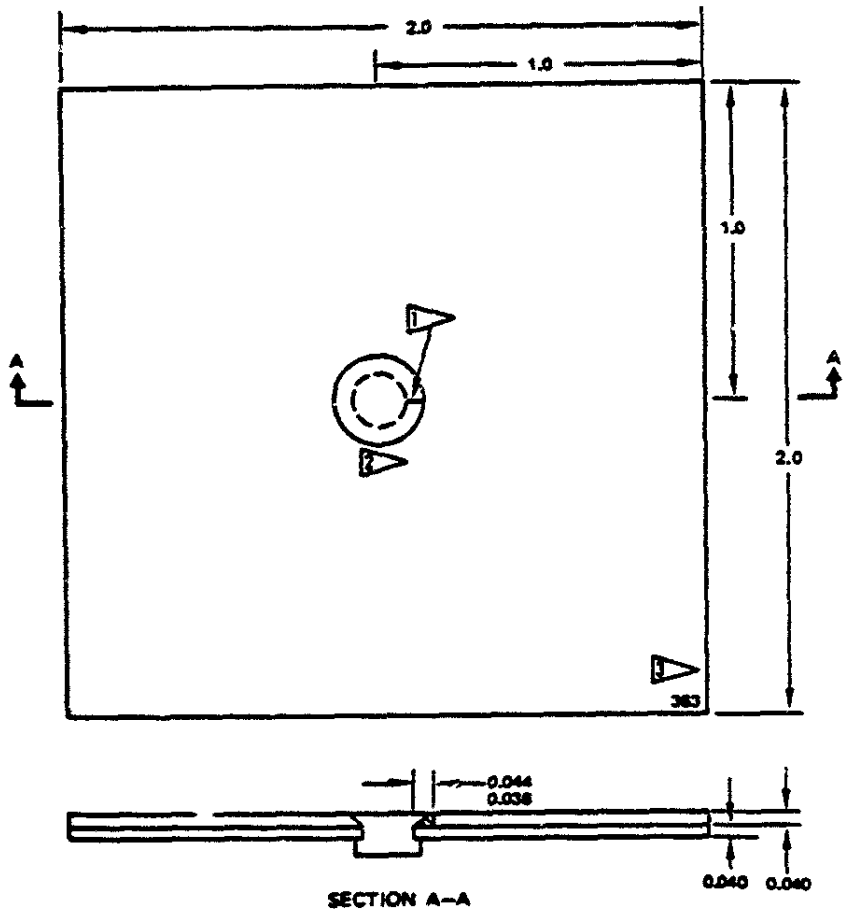

NOTES

- ALL DIMENSIONS ARE IN INCHES
- MATERIAL: 2024–T3 OR T4 AL CLAD
- TOLERANCE: X.X ± 0.05
  X.XXX ± 0.005,
  EXCEPT AS NOTED

1 EDM NOTCH OR EQUIVALENT 0.003 TO 0.005 WIDE

2 FOR 5/32 CRACK STANDARD DRILL NO. 20 (0.161 INCH DIA.) HOLE AND COUNTERSINK 100° TOP SHEET.

3 ETCH OR STEEL STAMP WITH 363

Reference Standard 363
Figure 1

APPENDIX C

BOEING COMMERCIAL JET

NONDESTRUCTIVE TEST

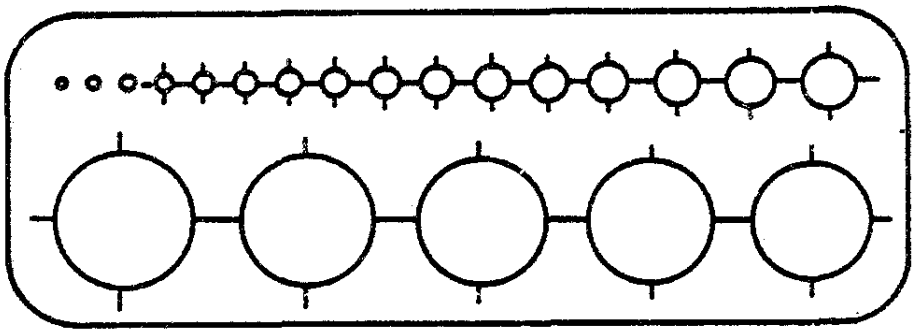

PROBE GUIDE
(DRAFTSMAN CIRCLE TEMPLATE)

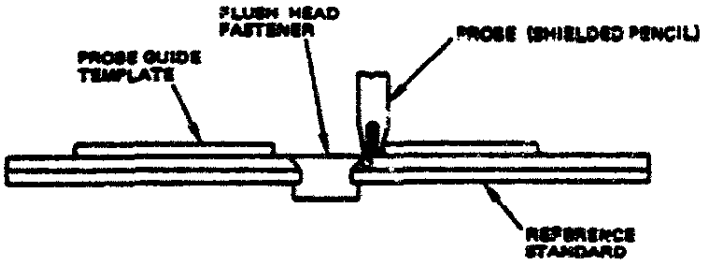

Instrument Calibration
Figure 2

BOEING COMMERCIAL JET

NONDESTRUCTIVE TEST

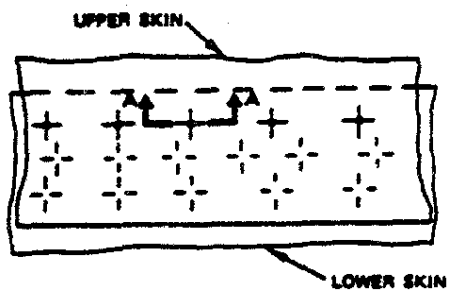

TYPICAL LAP JOINT

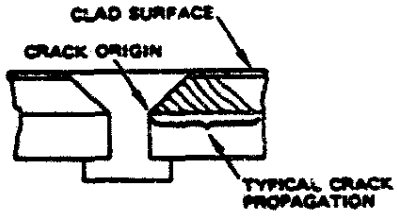

SECTION A—A

NOTES

◆ CRITICAL FASTENER ROW

-⁄- RIVET LOCATION (REF)

Countersink in Longitudinal Lap Joints
Figure 3

APPENDIX D

BOEING SERVICE BULLETIN 737-53-1076

BOEING 737

SERVICE BULLETIN SUMMARY

BOEING COMMERCIAL AIRPLANE COMPANY P.O. BOX 3707 SEATTLE, WASHINGTON 98124

SUBJECT: FUSELAGE - BONDED SKIN PANEL INSPECTION AND REPAIR

ATA: 5330 **NO:** 737-53-1076
DATE: October 30, 1986

BACKGROUND

Since 1970, 20 operators have reported 52 occurrences of delamination or corrosion of bonded crown or side skins on 41 airplanes with from 10,100 to 49,100 flight hours and from 7,700 to 46,600 flight cycles. Of these occurrences, 3 were in the forward crown, 14 in the forward side, 20 in the aft crown, 15 in the aft side, 1 in the body crown over the wing center section, and 9 in locations not identified.

Inspection per this bulletin will determine the structural condition of the bonded crown and side skin-doubler assemblies, one belly skin between BS 259.5 to BS 360, and a portion of a belly skin from BS 1016 to BS 1026. Bond separation, corrosion and skin cracking which is not detected could result in expensive repairs, or cabin pressurization difficulties.

ACTION

At the next scheduled D check, or within 4 years from receipt of bulletin, whichever occurs first, accomplish a visual external and internal inspection for corrosion and delamination of bonded skin-doubler assemblies. Selectively inspect per this bulletin the crown and side skins from Body Station (BS) 259.5 to BS 1016, belly skins from BS 259.5 to BS 360, a ten inch strip from BS 1016 to BS 1026, and the edges of the fuselage door cutouts. Reinspect areas at each subsequent D check. Permanent repairs may be accomplished per 737 Structural Repair Manual. Temporary repairs may be accomplished per this service bulletin.

EFFECTIVITY

Line Number 1-464

MANPOWER

Total Man-Hours - 30
(External Inspection Only)

MATERIAL INFORMATION

None

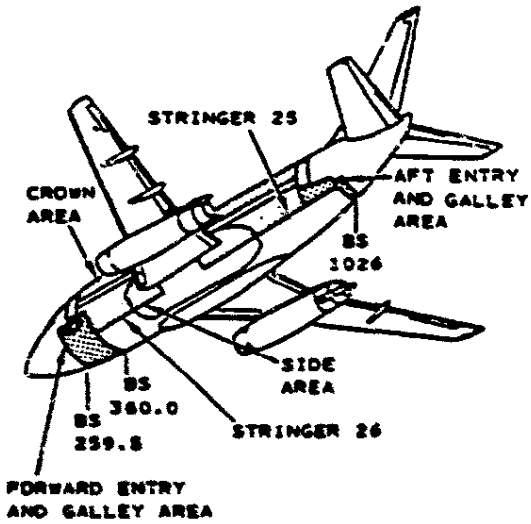

AREAS OF INSPECTION

APPENDIX E

SPECIALIST'S FACTUAL REPORT OF INVESTIGATION, CVR FLIGHT DATA READOUT REPORT OF INVESTIGATION

BY

JAMES R. CASH
AIR SAFETY INVESTIGATOR

WARNING

The reader of this report is cautioned that the transcription of a CVR tape is not a precise science but is the best product possible from an NTSB group investigative effort. The transcript, or parts thereof, if taken out of context, could be misleading. The attached CVR transcript should be viewed as an accident investigation tool to be used in conjunction with other evidence gathered during the investigation. Conclusions or interpretations should not be made using the transcript as the sole source of information.

APPENDIX E

NATIONAL TRANSPORTATION SAFETY BOARD
Bureau of Technology
Washington, D.C. 20594

May 26, 1988

GROUP CHAIRMAN'S FACTUAL REPORT OF INVESTIGATION
COCKPIT VOICE RECORDER
DCAMA88054

A. ACCIDENT

Location: Near Maui, Hawaii
Date : April 28, 1988
Time : 1346 Hawaii Standard Time (HST)
Aircraft: Aloha Airlines, Boeing 737, N73711

B. GROUP

James R. Cash, National Transportation Safety Board Chairman
Quentin J. Smith, Federal Aviation Administration Member
Barry A. Kane, Airline Pilots Assoc., Aloha Airlines Member.

C. SUMMARY

A Collins Model 642C-1 Cockpit Voice Recorder (CVR) SN 54 was brought to the audio laboratory of the National Transportation Safety Board. A transcript was prepared of the final 16 minutes of the fair quality 32 minute recording (attached).

D. DETAILS OF INVESTIGATION

The CVR Recording starts at 1328:11 Hawaiian Standard Time (HST) just as the flight crew is receiving their takeoff information from dispatch at Hilo Airport. The flying crew performed their taxi checklist at 1329:05 HST which included setting the aircraft's air-conditioning and pressurization to flight. The flight progressed normally during the takeoff and initial climb to their assigned altitude of FL240. There were no conversations on the CVR that pertained to pressurization problems during takeoff or climb. The transcripts starts at 1344:22 HST and continues until the end of tape at 1359:57.5 HST. The ambient background noise recorded on the cockpit area mike increased drastically at 1345:43 HST. After the increase in the background noise there were no inter-cockpit conversations identified until 1349:32 HST. The intelligibility of the inter-cockpit conversations was low due to the high level of wind and background noise present in the cockpit after the structual failure. Once the aircraft descended and slowed down on final approach the intelligibility of the crew conversations increased.

APPENDIX E

NATIONAL TRANSPORTATION SAFETY BOARD
Bureau of Technology
Washington, D.C. 20594

May 26, 1988

GROUP CHAIRMAN'S FACTUAL REPORT OF INVESTIGATION
COCKPIT VOICE RECORDER
DCAMA88054

A. ACCIDENT

Location: Near Maui, Hawaii
Date : April 28, 1988
Time : 1346 Hawaii Standard Time (HST)
Aircraft: Aloha Airlines, Boeing 737, N73711

B. GROUP

James R. Cash, National Transportation Safety Board Chairman
Quentin J. Smith, Federal Aviation Administration Member
Barry A. Kane, Airline Pilots Assoc., Aloha Airlines Member.

C. SUMMARY

A Collins Model 642C-1 Cockpit Voice Recorder (CVR) SN 54 was brought to the audio laboratory of the National Transportation Safety Board. A transcript was prepared of the final 16 minutes of the fair quality 32 minute recording (attached).

D. DETAILS OF INVESTIGATION

The CVR Recording starts at 1328:11 Hawaiian Standard Time (HST) just as the flight crew is receiving their takeoff information from dispatch at Hilo Airport. The flying crew performed their taxi checklist at 1329:05 HST which included setting the aircraft's air-conditioning and pressurization to flight. The flight progressed normally during the takeoff and initial climb to their assigned altitude of FL240. There were no conversations on the CVR that pertained to pressurization problems during takeoff or climb. The transcripts starts at 1344:22 HST and continues until the end of tape at 1359:57.5 HST. The ambient background noise recorded on the cockpit area mike increased drastically at 1345:43 HST. After the increase in the background noise there were no inter-cockpit conversations identified until 1349:32 HST. The intelligibility of the inter-cockpit conversations was low due to the high level of wind and background noise present in the cockpit after the structual failure. Once the aircraft descended and slowed down on final approach the intelligibility of the crew conversations increased.

APPENDIX E

The flight crew reviewed the group's transcript on May 11, 1988 and suggested the following corrections and additions:

TIME	CONTENT
1344:56	CAM-3 well--we have friends celebrating their 50th anniversary
1353:16	CAM-1 they've picked up some of your* transmissions right there I think that they can hear your but they can't hear me.
1353:18	CAM-2 allright
1353:27	CAM-2 allright
1355:09	CAM-1 pull the manual*
1356:54	CAM-1 figure a * be a partial flap setting and hold that for * final*
1357:15	CAM-2 the very back
1357:18	CAM-1 no * * next to the take the asymmetrical flaps partial
1358:07	CAM-1 one fifty bug
1358:23	CAM-2 want me to go flaps forty - help you with the brakes.
1358:38	CAM-1 they'll follow
1358:45	CAM-2 one reverse
1358:46	CAM-2 no thrust reverser
1358:48	CAM-1 * * okay shut put it down
1358:50	CAM-1 (Delete statement)
1358:52	CAM-1 no *** the left engine
1359:05	CAM-1 okay *** the emergency evacuation
1359:07	((sound similar to ACM seat noises))
1359:18	CAM-1 okay everybody who * get out I'll go through it you go

APPENDIX E

1359:29	*how do you get this up
1359:49	CAM-1 the APU I had running so we might as well fire that one too
1359:53	CAM-2 fire extinguishers are discharged.

James R. Cash
Electronics Engineer

APPENDIX E

TRANSCRIPT OF A COLLINS MODEL 6420-1 COCKPIT VOICE RECORDER S/N 54 REMOVED FROM ALOHA AIRLINES BOEING 737 WHICH WAS INVOLVED IN AN ACCIDENT ON APRIL 28, 1988, NEAR MAUI, HAWAII

CAM	Cockpit area microphone voice or sound source
RDO	Radio transmission from accident aircraft
-1	Voice identified as Captain
-2	Voice identified as First Officer
-3	Voice identified as Jumpseat Passenger
-?	Voice unidentified
TWR	Kahului Local Air Traffic Control (Tower)
UNK	Unknown
*	Unintelligible word
@	Nonpertinent word
#	Expletive deleted
%	Break in continuity
()	Questionable text
(())	Editorial insertion
	Pause

NOTE: All times are expressed in Hawaii Standard Time only those radio transmissions to and from the accident aircraft were transcribed.

INTRA-COCKPIT TIME & SOURCE	CONTENT	AIR-GROUND COMMUNICATION TIME & SOURCE	CONTENT
1344:22	((start of transcript))		
CAM	((sound of altitude chime))		
1344:35 CAM-3	**		
1344:42 CAM-1	*		
1344:52 CAM-1	are you going straight this time to Honolulu now or are you gunna		
1344:56 CAM-3	well -- * we're celebrating fifteenth anniversary*		
1345:04 CAM-1	yup		
1345:07 CAM-1	*		
1345:22 CAM-1	where's that National Weather Service weather station out here is that at the old tower		
1345:26 CAM-3	yeah old tower they they *		
1345:28 CAM-1	at the base of it oh yeah		

INTRA-COCKPIT

TIME & SOURCE	CONTENT
1345:32 CAM-1	they don't have any radios or anything * or any air to ground radios do they
1345:38 CAM-3	*
1345:43 CAM	((sound of increased wind noise))
1345:44 CAM-?	((sound of scream))
CAM	((sound of dramatic increase in cockpit wind noise))
	((no cockpit conversations were heard till 1349:32))
	((all radio transmissions were made using the oxygen mask microphone until 1349:57))

AIR-GROUND COMMUNICATION

TIME & SOURCE	CONTENT
1346:13 RDO-2	center Aloha two forty three
1346:44 RDO-2	center Aloha two forty three we're going down -request lower

INTRA-COCKPIT

TIME & SOURCE	CONTENT

AIR-GROUND COMMUNICATION

TIME & SOURCE	CONTENT
1346:55 RDO-2	center Aloha two forty three
1347:25 RDO-2	center Aloha two forty three
1347:44 RDO-2	Maui approach Aloha two forty three
1348:01 RDO-2	Maui tower Aloha two forty three
1348:11 RDO-2	Maui tower Aloha two forty three we're inbound for landing
1348:29 RDO-2	Maui tower Aloha two forty three
1348:34 TWR	callin' tower say again
1348:35 RDO-2	Maui tower Aloha two forty three we're inbound for landing we're just ah to the west of Makena just to the east of Makena descending out of thirteen and we have rapid depr-we are unpressurized -declaring an emergency

-4-

INTRA-COCKPIT

TIME & SOURCE	CONTENT
1348:32 CAM-2	you okay

AIR-GROUND COMMUNICATION

TIME & SOURCE	CONTENT
1348:57 RDO-2	could ya --
1349:01 TWR	is that Aloha two forty four on the emergency
1349:01 RDO-2	Aloha two forty three
1349:03 TWR	ah two forty six
1349:05 RDO-2	Aloha two four three
1349:07 TWR	Aloha two forty three say your position
1349:07 RDO-2	we're just ah to the east of Makena point descending out of eleven thousand --request clearance into Maui for landing request the equipment
1349:16 TWR	okay the equipment is on the fie-is on the way squawk zero three four three

INTRA-COCKPIT TIME & SOURCE	CONTENT
	((crew stopped using oxygen mask microphone))
3050:10 CAM-2	*
1350:41 CAM-2	do you want ra to call for anything else
1350:43 CAM-1	nope
1350:54 CAM-2	*

AIR-GROUND COMMUNICATION TIME & SOURCE	CONTENT
1349:47 TWR	Aloha two forty three winds zero four zero at one five altimeter two niner niner niner just to verify again you're breaking up your call sign is two fourty four is that correct or two forty three
1349:57 RDO-2	two forty three Aloha two forty three
1349:59 TWR	two forty two the equipment is on the roll plan straight in runway two and I'll keep you advised of any wind change
1350:07 RDO-2	Aloha two forty three

-6-

INTRA-COCKPIT

TIME & SOURCE	CONTENT
1351:30	((sound of engine ignition whine starts))
1351:48 CAM-1	*
1351:51 CAM-3	I'm fine
1352:10 CAM-2	okay it's possible *
1352:12 TWR	Aloha two forty threo you still up
1352:14 CAM-?	*

AIR-GROUND COMMUNICATION

TIME & SOURCE	CONTENT
1351:00 TWR	Aloha two forty three can you come up on one one niner point five
1351:04 RDO-2	two forty three
1351:07 RDO-2	can you hear us on one ninteen five two forty three
1351:19 RDO-2	Maui tower -- two forty three it looks like we've lost a door we have a hole in this ah left side of the aircraft

INTRA-COCKPIT TIME & SOURCE	CONTENT
1352:14 CAM-2	can't **
CAM-2	*
1352:56 CAM-2	want the gear

AIR-GROUND COMMUNICATION TIME & SOURCE	CONTENT
1352:15 RDO-1	affirmative
1352:17 TWR	Aloha two forty three Maui
1352:23 RDO-1	ah two Aloha two forty three is ah -
1352:32 RDO-2	Maui tower two forty three
1352:36 TWR	Aloha two forty Aloha two forty three if you hear ident
1352:48 TWR	Aloha two forty three roger I got your ident straight in runway two cleared to land wind zero four zero at two zero

INTRA-COCKPIT

TIME & SOURCE	CONTENT
1352:57 CAM-1	no
1352:58 CAM-2	want the gear
1352:59 CAM-1	***
1353:05 CAM-2	do you want it down ****
1353:07 CAM-1	flaps fifteen landing
1353:09 CAM-2	okay
1353:13 CAM-1	here we go
1353:16 CAM-1	we've picked up some of your airplane business right there i think that they can hear you they can't hear me
1353:22 CAM-1	ah tell him ah we'll need assistance to evacuate this airplane
1353:27 CAM-2	right
1353:29 CAM-1	we really can't communicate with the flight attendents but we'll need trucks and we'll need ah airstair from Aloha

AIR-GROUND COMMUNICATION

TIME & SOURCE	CONTENT

INTRA-COCKPIT

TIME & SOURCE	CONTENT
1353:35 CAM-2	alright
1354:14 CAM-1	feels like manual reversion
1354:17 CAM-2	what
1354:18 CAM-2	flight controls feels like manual reversion

AIR-GROUND COMMUNICATION

TIME & SOURCE	CONTENT
1353:40 RDO-2	Maui tower two forty three can you hear me on tower
1353:42 TWR	Aloha two forty three I hear you loud and clear go ahead
1353:44 RDO-2	ah we're gunna' need assistance we can not communicate with the flight attendents ah we'll need -- assistance for the passengers when we land
1353:52 TWR	okay I understand you gunna' need an ambulance is that correct
1353:57 RDO-2	affirmative

INTRA-COCKPIT

TIME & SOURCE	CONTENT
1354:23 CAM-1	*
1354:25 CAM-2	well we could * the hole
1354:26 CAM-1	I know it yeah
1354:28 CAM-1	ah
1354:30 CAM-2	can we maintain altitude okay
1354:31 CAM-1	let's try flying let's try flying with the gear down here
1354:34 CAM-2	alright you got it
1354:37 CAM	((sound of gear being lowered))
1354:45 CAM-1	do you have a passenger count for tower

AIR-GROUND COMMUNICATION

TIME & SOURCE	CONTENT
1354:42 TWR	Aloha two forty three can you give me your souls on board and your fuel on board
1354:47 RDO-2	we ah eighty five - eighty six plus five crew members

INTRA-COCKPIT

TIME & SOURCE	CONTENT
1354:53 CAM-2	they still don't understand
1355:09 CAM-1	*
1355:31 CAM-1	how far how far till we intercept

AIR-GROUND COMMUNICATION

TIME & SOURCE	CONTENT
1354:52 TWR	okay and ah just to verify you broke up initially you do need an ambulance is that correct
1354:56 RDO-2	affirmative
1354:59 TWR	roger how many do you think are injured
1355:00 RDO-2	we have no idea we can not communicate with our flight attendent
1355:02 TWR	okay we'll have ambulance on the way
1355:06 RDO-2	there's a possibility that ah we won't have a nose gear

INTRA-COCKPIT

TIME & SOURCE	CONTENT
1355:39 CAM-2	down here
1355:41 CAM-1	yeah back me up for now
1355:52 CAM-1	tell him we got such problems but we are going to land anyway - even without a nose gear - but they should be aware of we do not have a safe nose gear down indication
1356:33 CAM-2	is it easier to control with the flaps up
1356:35 CAM-1	yeah put 'em at five

AIR-GROUND COMMUNICATION

TIME & SOURCE	CONTENT
1356:02 TWR	Aloha two forty three wind zero five the equipment is in place
1356:06 RDO-2	okay be advised we have no nose gear we are landing without the nose gear
1356:11 TWR	okay if you need any other assistance advise
1356:13 RDO-2	* - we'll need all the equipment you've got

INTRA-COCKPIT

TIME & SOURCE	CONTENT
1356:41 CAM-2	can you get back over
1356:43 CAM-1	yeah I'm workin' on it
1356:48 CAM-1	can you give me a Vee speed for a flaps five landing
1356:54 CAM-1	figure- e- a- *be a partial flaps * and hold that for quite a while
1357:08 CAM-1	*
1357:15 CAM-2	are you turning back
1357:17 CAM-1	what
1357:18 CAM-1	no ** next to the take the reference flaps partial flaps
1357:22 CAM-2	okay
1357:36 CAM-2	do you want the flaps down as we land

AIR-GROUND COMMUNICATION

TIME & SOURCE	CONTENT
1357:11 TWR	Kahului airport winds zero four at one six

INTRA-COCKPIT

TIME & SOURCE	CONTENT
1357:37 CAM-1	yeah after we touch down
1357:40 CAM-2	okay
1357:47 CAM-2	ref's forty plus thirty
1357:51 CAM-2	flaps one to fifteen
1357:55 CAM-1	one fifty three
1357:56 CAM-2	Vee ref forty plus thirty one thru fifteen
1358:00 CAM-1	how much is that
1358:02 CAM-2	ah ref --one twenty two
1358:04 CAM-1	one twenty
1358:05 CAM-2	one fifty

AIR-GROUND COMMUNICATION

TIME & SOURCE	CONTENT
1357:41 TWR	Aloha two forty three wind zero five zero at two zero
1357:45 RDO-?	((sound of two mike keys))

INTRA-COCKPIT TIME & SOURCE	CONTENT
1358:07 CAM-1	one fifty what
1358:08 CAM-2	one fifty two
1358:10 CAM-1	right
1358:23 CAM-2	want me to go flaps forty - help you to *
1358:25 CAM-1	no
1358:27 CAM-2	okay
1358:28 CAM-1	on the ground
1358:38 CAM-1	(they'll find)
1358:42 CAM	((sound of touchdown))

AIR-GROUND COMMUNICATION TIME & SOURCE	CONTENT
1358:12 TWR	Aloha two four three just for your information the gear appears down gear appears down
1358:14 RDO-?	((sound of two mike keys))

INTRA-COCKPIT

TIME & SOURCE	CONTENT
1358:45 CAM-2	one reverse no -
1358:46 CAM-1	okay
CAM-2	thrust reverser
1358:48 CAM-1	okay shut it down
1358:49 CAM-2	shut it down
1358:50 CAM-1	yup
1358:52 CAM-1	now ** left engine
1358:54 CAM-2	flaps
1359:01 CAM-1	okay

AIR-GROUND COMMUNICATION

TIME & SOURCE	CONTENT
1358:55 TWR	Aloha two forty three just shut'er down where you are everything fine the gear did- the fire trucks are on the way

INTRA-COCKPIT TIME & SOURCE	CONTENT	AIR-GROUND COMMUNICATION TIME & SOURCE	CONTENT
1359:01	((sound of engine ignition whine stops))		
1359:05 CAM-2	that's off		
CAM-1	okay start * call for the emergency evacuation		
1359:06 CAM	((sound of engine winding down))		
1359:12 CAM-1	the flaps are down good		
1359:17 CAM-1	go through the checklist and stuff		
1359:18 CAM-1	okay everybody who can get out I'll go through it you go out the steps		
1359:22 CAM-2	do you want me to help them		
1359:25 CAM-1	let's see where it is		
1359:29 CAM-3	how do you get this up		
1359:32 CAM-1	ah squeeze it together squeeze it together squeeze the top together with the bottom		

INTRA-COCKPIT TIME & SOURCE	CONTENT	AIR-GROUND COMMUNICATION TIME & SOURCE	CONTENT
1359:37 CAM-3	okay		
1359:38 CAM-2	parking brake		
1359:39 CAM-1	set		
1359:40 CAM-2	stowed speedbrakes emergency evacuation fire		
1359:45 CAM-1	ah does it say fire the bottles anywhere okay we won't do that I'll get this one you get that one		
1359:49 CAM-1	the APU I had running so we might as well throttle that one too		
1359:53 CAM-2	*		
CAM-1	I'm gunna' shut off the APU now		
1359:56 CAM-1	I still got power right now but I don't need to talk to anybody anymore		
1359:57.5	((end of recording))		

APPENDIX E

NATIONAL TRANSPORTATION SAFETY BOARD
Bureau of Technology
Washington, D.C.

May 18, 1988

FLIGHT DATA RECORDER READOUT REPORT OF INVESTIGATION
DCA 88-MA-054

A. ACCIDENT

Location: Near Maui, Hawaii

Date : April 28, 1988

Time : 1347 Local

Aircraft: Aloha Airlines, Boeing B-737-297, N73711, Flight 243

B. GROUP

Not Applicable

C. SUMMARY

The aircraft was equipped with a flight data recorder, Fairchild Model 5424, S/N 7274. The recorder was removed from the aircraft and was brought to the Safety Board's Flight recorder Laboratory in Washington, D.C. for examination and readout of the pertinent flight record. Side 2 of the foil was in use, Side 1 having been used previously. Examination of the foil indicated that the recorder had been operating in the normal manner with no evidence of recorder malfunction.

It should be noted that Aloha Airlines did not supply the most recent calibration data for this recorder. Therefore, it was necessary to use the standard calibration for this model recorder with adjustments. The values thus derived, particularly those of altitude and airspeed, may not be as accurate as they would have been.

D. DETAILS OF EXAMINATION

It was reported that the aircraft was climbing to cruise and was passing through the area of 24,000 feet pressure altitude when the ceiling area of the forward passenger cabin burst open in explosive decompression. The aircraft was kept under control by the flight crew and an emergency landing was made in Maui.

APPENDIX E

Examination of the recorded traces showed the flight to be relatively smooth from the point of liftoff to the occurrence. The airspeed trace ceased abruptly and dropped to a position below zero KIAS and remained there until electric power was removed. The other parameter styli appeared to operate in the normal manner; however, they were affected by the vibration as shown on the graph attached. The airspeed trace, in its bottomed-out position, showed the effects of this vibration also. The "G" force measured at the emergency landing was 2.4g which is only a change of 1.4g from an at rest position.

The readout results and a graphic display of those results are attached as part of this report.

Billy M. Hopper
Billy M. Hopper
Air Safety Investigator

ATTACHMENTS:

1. Readout Data
2. Readout Graph
3. Ground Measurements and Styli Offsets
4. Recorder Calibration Data
5. Photograph of Foil Medium and Traces

APPENDIX E

ATTACHMENT 1

FDR 13-MAY-88 09:37:25 PAGE 1

BLOWER

TIME	ALT FEET	A/S KTS	HDG DEG	VACC GS	MIC
00:01.9				0.99	
00:04.1	18628.				
00:07.2			283.8		
00:07.9		293.			
00:08.[illegible]				1.01	
00:12.3		294.			
00:14.3			283.5		
00:15.4	18788.				
00:16.4				0.99	
00:19.4				1.01	
00:21.3		294.			
00:25.5	18963.				
00:25.7			284.1		
00:28.7		291.			
00:29.9	19062.				
00:30.6			284.4		
00:33.1	19177.				
00:34.0				0.98	
00:37.0				1.00	
00:37.3			283.9		
00:38.0	19252.				
00:40.9		292.			
00:43.2	19308.				
00:45.8			283.7		
00:52.4		292.			
00:57.5			283.1		
00:59.3	19600.				
01:03.8				1.00	
01:04.2			282.9		
01:04.5	19727.				
01:08.5		291.			
01:11.6	19883.				
01:12.5				1.00	
01:14.3		290.			
01:17.0				0.98	
01:18.6			281.9		
01:21.5	20107.				
01:25.3			281.6		
01:25.4		288.			
01:27.0				1.00	
01:30.1	20310.				
01:31.9		285.			
01:36.5				0.99	
01:37.3			283.3		
01:39.0				0.95	
01:39.4		284.			

APPENDIX E

FDR 13-MAY-88 09:37:25 PAGE 2

BLOWER

TIME	ALT FEET	A/S KTS	HDG DEG	VACC GS	MIC
01:39.5	20833.				
01:41.8				0.97	
01:45.5		284.			
01:51.6				0.95	
01:52.1	21150.				
01:52.6		285.			
01:56.4				0.98	
01:58.2		285.			
02:00.5				0.97	
02:03.5				0.99	
02:03.9		286.			
02:04.4			283.3		
02:06.3				0.94	
02:07.0	21433.				
02:09.2				0.97	
02:11.4		288.			
02:14.0			283.6		
02:16.0				0.96	
02:20.2	21580.				
02:21.6				1.01	
02:25.9			283.2	0.99	
02:28.9		295.			
02:33.5				1.01	
02:34.1	21757.				
02:37.6			282.4		
02:39.0		299.			
02:40.8				1.00	
02:42.1	21963.				
02:43.8				1.01	
02:47.0			281.2		
02:47.6				0.99	
02:48.8		299.			
02:54.7				1.00	
02:55.9		299.			
02:56.8				1.01	
03:01.7			280.5		
03:03.9	22333.				
03:06.7		296.			
03:06.8			281.4	0.98	
03:08.4	22417.				
03:11.1			282.2		
03:13.3	22543.				
03:14.4				1.00	
03:16.3		297.			
03:17.8				1.03	
03:20.3	22650.				

FDR 11-MAY-88 10:44:33 PAGE 3

BLOWER

TIME	ALT FEET	A/S KTS	HDG DEG	VACC GS	MIC
03:22.1				1.01	
03:23.7		289.			
03:26.2				1.02	
03:28.5	22807.				
03:30.7			281.4		
03:32.9		286.			
03:33.8				1.00	
03:36.0	23017.				
03:36.7				1.02	
03:40.6	23207.				
03:40.6		283.			
03:45.3			280.2		
03:45.7				1.00	
03:46.1	23460.				
03:47.3				0.94	
03:49.4		283.			
03:51.5	23567.				
03:55.6			280.6		
03:58.7				0.98	
04:00.3		282.			
04:05.3			281.9		
04:05.7				1.01	
04:07.4		284.			
04:08.6				0.93	
04:10.9				0.96	
04:11.3	23870.				
04:14.0		285.			
04:14.6			283.2		
04:15.5	23943.				
04:19.1				1.01	
04:21.9			283.6		
04:25.2		289.			
04:26.9	24057.				
04:28.7				0.95	
04:33.2				1.00	
04:36.2			283.3		
04:40.1	24133.				
04:42.6				0.99	
04:43.9		297.			
04:46.1			283.7		
04:49.1				0.99	
04:50.0		301.			
04:51.0	24223.				
04:53.6				1.01	
04:54.3		302.			
04:55.3			284.0		

APPENDIX E

FDR 11-MAY-88 10:44:33 PAGE 4

BLOWER

TIME	ALT FEET	A/S KTS	HDG DEG	VACC GS	MIC
04:57.1				0.99	
04:57.7	24277.				
04:59.9			284.4		
05:01.5				0.96	
05:03.1		303.			
05:04.5				0.93	
05:04.6	24317.				
05:04.9			284.5		
05:05.0				-0.48	
05:06.2				2.95	
05:06.7				-0.31	
05:07.3				2.94	
05:07.6	24450.				
05:07.8				-0.42	
05:08.2				1.22	
05:08.6				-0.44	
05:09.8			286.4		
05:09.8			281.5		
05:10.0	23683.				
05:10.2				1.36	
05:11.3	24373.			0.51	
05:11.8	24397.		286.4		
05:12.4	23967.				
05:12.5				1.37	
05:12.7	24450.				
05:13.0				0.66	
05:13.3	24057.				
05:13.6			278.6		
05:14.3	24380.				
05:14.4				1.36	
05:14.6			284.1		
05:15.2	24157.				
05:15.5				0.87	
05:16.2	24347.				
05:16.9	23967.		280.2		
05:17.1				1.13	
05:18.1			272.2		
05:18.4	24063.			0.57	
05:18.6			277.2		
05:19.4				1.07	
05:20.8	23837.				
05:21.1			270.5		
05:21.3				0.81	
05:21.7	24073.				
05:22.5	23870.				
05:22.9			272.9		

APPENDIX E

FDR 11-MAY-88 10:44:33 PAGE 5

BLOWER

TIME	ALT FEET	A/S KTS	HDG DEG	VACC GS	MIC
05:23.0				1.56	
05:23.5	23980.				
05:23.8			270.6		
05:24.2				1.06	
05:24.5	23620.				
05:25.1				1.34	
05:26.4	23760.			1.03	
05:26.5			271.0		
05:27.5				1.19	
05:27.8			270.3		
05:28.3	23383.				
05:29.0				1.01	
05:29.6	23010.				
05:30.0			271.3		
05:30.0			271.3		
05:30.6				1.30	
05:31.0	23433.				
05:32.4			270.8		
05:32.6				1.08	
05:33.1	23093.				
05:33.7				1.28	
05:34.4			271.8		
05:34.8	23243.				
05:35.5				1.01	
05:35.9	22783.				
05:36.4				1.27	
05:36.5	23030.				
05:37.0				0.99	
05:37.6			271.4		
05:37.9	22617.				
05:38.3	22790.				
05:38.5				1.22	
05:39.8	22410.		270.4		
05:39.8	22710.				
05:40.0				0.95	
05:40.5	22620.				
05:41.5	22850.				
05:41.9				1.10	
05:43.1	22477.				
05:43.7	22813.				
05:44.0				0.95	
05:44.9			270.8		
05:45.3				1.07	
05:45.6	22333.				
05:46.3	22840.				
05:46.4				0.93	

APPENDIX E

FDR 11-MAY-88 10:44:33 PAGE 6

BLOWER

TIME	ALT FEET	A/S KTS	HDG DEG	VACC GS	MIC
05:47.8	22530.				
05:47.9				1.12	
05:48.7				0.97	
05:48.9	22890.				
05:50.2			267.4		
05:50.8				1.10	
05:51.2	22713.				
05:51.9	22980.				
05:52.3				0.74	
05:52.9	22613.				
05:53.1				1.01	
05:53.3	22313.				
05:53.9				0.85	
05:54.1	21900.				
05:54.7	22477.				
05:55.5				1.08	
05:55.7	22257.				
05:56.8	22823.				
05:57.5	22247.				
05:57.6				0.91	
05:58.6			266.2		
05:58.7	22310.				
06:00.2	22180.				
06:01.0	22827.				
06:03.8	22270.				
06:04.1	22610.				

APPENDIX E

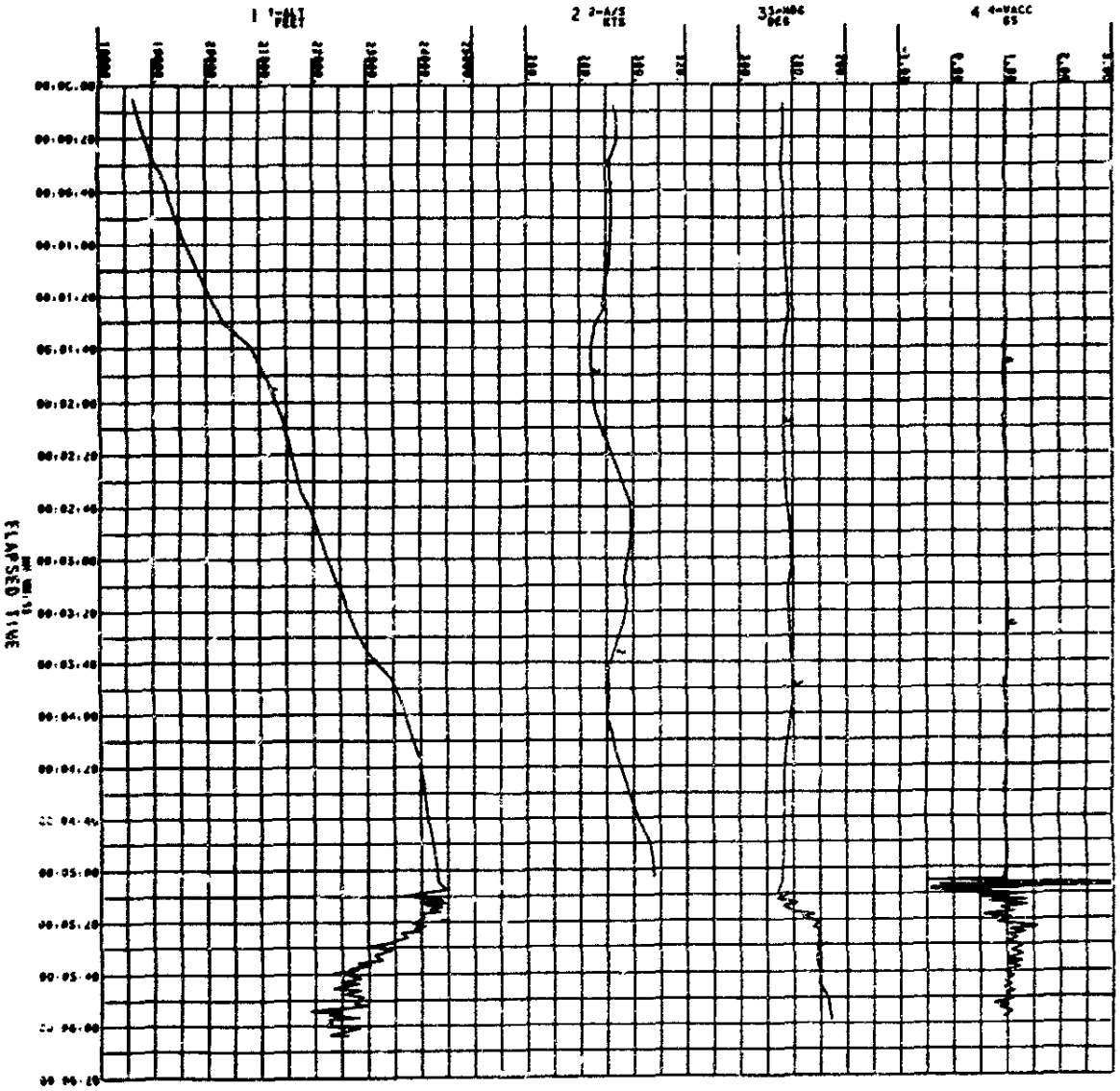

NATIONAL TRANSPORTATION SAFETY BOARD
BUREAU OF TECHNOLOGY
WASHINGTON, D. C.

LOCATION: NR. MAUI, HAWAII
DATE : APRIL 28, 1988
AIRCRAFT: BOEING B-737, N73711
OPERATOR: ALOHA AIRLINES
FLT. NO.: 243

RECORDER M/N FAIRCHILD 5424
RECORDER S/N: 7274
IDENT. NO SCA 88-W-A054
REPORT NO 88-21

ATTACHMENT 2

APPENDIX E

Attachment 3

Case No. DCA 88-M-A054

FDR: Fairchild Model 5424, S/N 7274

Ground Measurements

Altititude Correction (")	-0.0110
Airspeed (0 KIAS)	1.7501
Vertical Acceleration	4.2594
Airport Elevation (FT MSL)	54.0000
Altimeter Setting (Inches Hg)	29.92

Recording Styli Offsets (Horizontal)

Altitude	-0.0068"
Indicated Airspeed	0.0025"
Magnetic Heading	0.0023"
Vertical Acceleration	0.0040"
Microphone Keying	-0.0048"
Magnetic Heading N/S Binary	0.0117"
Time	0.0000"

APPENDIX E

ATTACHMENT 4

CASE NO. DCA 88-M-A054

FDR: Fairchild Model 5424, S/N 7274

Calibration Data

Altitude		Airspeed	
-1000	0.1250"	0	1.7515"
0	0.1920	100	1.7825"
1000	0.2550"	150	1.8205"
2000	0.3170"	200	1.8755"
3000	0.3760"	250	1.9545"
4000	0.4350"	300	2.0445"
6000	0.5450"		
8000	0.6480"		
10,000	0.7430"		
12,000	0.8270"		
14,000	0.9310"		
16,000	0.9950"		
18,000	1.0160"		
20,000	1.1360"		
22,000	1.1960"		
25,000	1.2860"		

APPENDIX F

AIR CARRIER MANUAL

Form No. M-86

NON-DESTRUCTIVE TESTING REPORT

1. Aircraft N 13711 Date: 05-06-88

2. Aircraft Total Airframe Hours: _____

3. Aircraft Total Number Landings: _____

4. If other than 1 thru 3 above, identify unit.

   Nomenclature: [illegible] Manufacturer: [illegible]

   Part No.: _____ Serial No.: _____

   Time Since Last Overhaul _____ Total Time (if available) _____

5. Type of Non-Destructive Testing method used:

   a. Radiographic _____ e. Magnetic _____ Type _____

   b. Ultrasonic _____ f. Dye-Penetrant _____

   c. Eddy Current ✓ g. Black Light _____

   d. Visual _____ h. Magnifying Glass _____ Power _____

6. Inspection accomplished in accordance with (i.e., Alert Service Bulletin, A.D. Note, Inspection Special Project, Service Bulletin, Service Letter, Special Instructions). B S B 727-53A1070

7. Inspection (Item 5) accomplished by [illegible]

8. X-Ray verified (2nd reading) by _____

9. Discrepancies found (If none, note "None Found"). None found.

   Area inspected STA 940 to 1016 L and R 54

10. Corrective action taken (If none, note "None Taken"). _____

APPENDIX F

AIR CARRIER MANUAL

VOLUME 2 MAINTENANCE

Revised: April 12/68

Section VII
Page 7.186-1

Form No. M-86

11. If any further information is submitted, add to a separate sheet of paper and attach to this report.

Separate page attached YES_____ NO ✓

12. Contents of this report checked, further action required.

YES_____ NO ✓

Signed_____
Senior Inspector
or
Quality Control Inspector

13. If further action was taken, what were the findings_____

14. This report is considered completed and accurate to the best of my knowledge and requires no further action.

Date:_____

Signed:_____
Senior Inspector
or
Quality Control Supervisor

AIR CARRIER MANUAL

Form No. M-86

NON-DESTRUCTIVE TESTING REPORT

1. Aircraft N [illegible] Date: [illegible]
2. Aircraft Total Airframe Hours: _____
3. Aircraft Total Number Landings: _____
4. If other than 1 thru 3 above, identify unit.

   Nomenclature: [illegible] Manufacturer: [illegible]

   Part No.: _____ Serial No.: _____

   Time Since Last Overhaul _____ Total Time (if available) _____
5. Type of Non-Destructive Testing method used:

   a. Radiographic _____ e. Magnetic _____ Type _____

   b. Ultrasonic _____ f. Dye-Penetrant _____

   c. Eddy Current ✓ g. Black Light _____

   d. Visual _____ h. Magnifying Glass _____ Power _____
6. Inspection accomplished in accordance with (i.e., Alert Service Bulletin, A.D. Note, Inspection Special Project, Service Bulletin, Service Letter, Special Instructions). _____
7. Inspection (Item 5) accomplished by [illegible]
8. X-Ray verified (2nd reading) by _____
9. Discrepancies found (If none, note "None Found"). [illegible]
10. Corrective action taken (If none, note "None Taken"). _____

APPENDIX F

AIR CARRIER MANUAL

VOLUME 2 MAINTENANCE

Revised: April 12/68

Section VII
Page 7.186-1

Form No. M-86

11. If any further information is submitted, add to a separate sheet of paper and attach to this report.

Separate page attached YES_____ NO_✓_____

12. Contents of this report checked, further action required.

YES_____ NO_✓_____

Signed_____
Senior Inspector
or
Quality Control Inspector

13. If further action was taken, what were the findings_____

_____

_____

_____

_____

14. This report is considered completed and accurate to the best of my knowledge and requires no further action.

Date:_____

Signed:_____
Senior Inspector
or
Quality Control Supervisor

NEW SYSTEM AFT OF 727B

STR H.L. STA 540 TO 907.

STA 540 TO 727 - NO DEFECT NOTED

STA 727 TO 907 - REFER BELOW.

				INCHES FROM STA 727 TO STA 907
	RIVET 1.	AFT	.050	25 5/8
15 3/4	2.	AFT	.150	55 5/8
		FWD	.100	"
	3	AFT	.075	105 3/8

AFT OF BAT

				INCHES FROM STA 907 BACK TO STA 727
	4.	AFT	.075	63 1/2
		FWD	.050	"
3 3/4	5.	AFT	.050	57 1/2
		FWD	.050	"
13 3/4	6.	AFT	.050	47 1/2
14 3/4	7.	FWD	.100	46 1/2
16 3/4	8.	AFT	.125	44 1/2
		FWD	.100	"
	9.	FWD	.075	29 1/2

CRACK LGT RGE APPROX INCH

APPENDIX F

AIR CARRIER MANUAL

VOLUME 2 MAINTENANCE

Revised: April 12/68

Section VII
Page 7.186

Form No. M-86

NON-DESTRUCTIVE TESTING REPORT

1. Aircraft N [illegible] Date: [illegible]
2. Aircraft Total Airframe Hours: _____
3. Aircraft Total Number Landings: _____
4. If other than 1 thru 3 above, identify unit.

   Nomenclature: [illegible] Manufacturer: [illegible]

   Part No.: _____ Serial No.: _____

   Time Since Last Overhaul _____ Total Time (if available) _____
5. Type of Non-Destructive Testing method used:

   a. Radiographic _____ e. Magnetic _____ Type _____

   b. Ultrasonic _____ f. Dye-Penetrant _____

   c. Eddy Current ✓ g. Black Light _____

   d. Visual _____ h. Magnifying Glass _____ Power _____
6. Inspection accomplished in accordance with (i.e., Alert Service Bulletin, A.D. Note, Inspection Special Project, Service Bulletin, Service Letter, Special Instructions). _____
7. Inspection (Item 5) accomplished by [illegible]
8. X-Ray verified (2nd reading) by _____
9. Discrepancies found (If none, note "None Found"). [illegible]
10. Corrective action taken (If none, note "None Taken"). _____

Page 1 of 2

APPENDIX F

AIR CARRIER MANUAL

VOLUME 2 MAINTENANCE

Revised: April 12/68

Section VII
Page 7.186-1

Form No. M-86

11. If any further information is submitted, add to a separate sheet of paper and attach to this report.

Separate page attached YES_____ NO___✓___

12. Contents of this report checked, further action required.

YES_____ NO___✓___

Signed_____
Senior Inspector
or
Quality Control Inspector

13. If further action was taken, what were the findings_____

_____

_____

_____

_____

14. This report is considered completed and accurate to the best of my knowledge and requires no further action.

Date:_____

Signed:_____
Senior Inspector
or
Quality Control Supervisor

APPENDIX F

STR 4 R STA 540 TO 907

				INCHES FROM STA 540
RIVET 1.	O	AFT	.050	105 5/8
2.	O	Fwd	.50	146 5/8
3	O	AFT	.016	151 5/8
				INCHES FROM STA. 722 - 9
1.	O	Fwd	.015	42 1/4
		AFT	.050	"
2.	O	Fwd	.075	47 1/4
		AFT	.050	"
3.	O	Fwd	.050	55 1/4
		AFT	.075	"
4.	O	Fwd	.100	66 1/4
5	O	AFT	.050	67 1/4
				INCHES FROM 907 BACK T 722.
6.	O	Fwd	.050	34 5/8
7.	O	AFT	.050	6 3/8
		Fwd	.050	"
8	O	Fwd	.050	5 3/8

(CRACK LGT APPROX 10 INCHES.)

AIR CARRIER MANUAL

Form No. M-86

NON-DESTRUCTIVE TESTING REPORT

1. Aircraft N [illegible] Date: [illegible]
2. Aircraft Total Airframe Hours: _____
3. Aircraft Total Number Landings: _____
4. If other than 1 thru 3 above, identify unit.

   Nomenclature: [illegible] Manufacturer: [illegible]

   Part No.: _____ Serial No.: _____

   Time Since Last Overhaul _____ Total Time (if available) _____
5. Type of Non-Destructive Testing method used:

   a. Radiographic _____ e. Magnetic _____ Type _____

   b. Ultrasonic _____ f. Dye-Penetrant _____

   c. Eddy Current ✓ g. Black Light _____

   d. Visual _____ h. Magnifying Glass _____ Power _____
6. Inspection accomplished in accordance with (i.e., Alert Service Bulletin, A.D. Note, Inspection Special Project, Service Bulletin, Service Letter, Special Instructions). _____
7. Inspection (Item 5) accomplished by [illegible]
8. X-Ray verified (2nd reading) by _____
9. Discrepancies found (If none, note "None Found"). [illegible]
10. Corrective action taken (If none, note "None Taken"). _____

APPENDIX F

STR 10L

				INCHES MOVING FWD FROM F.S. 807.
RIVET 1	O	AFT	.100	27 1/4
2	O	"	.075	33 1/4
3	O	"	.050	34 1/4
4L		Fwd	.050	"
4	O	"	.100	55 1/4
5	O	AFT	.075	56 1/4
6	O	"	.075	57 1/4
7	O	"	.075	35 1/4
8	O	"	.075	54 1/4
9	O	"	.075	54 1/4
		Fwd	.075	"
10	O	AFT	.075	76 1/4
11	O	Fwd	.050	76 1/4
12	O	AFT	.075	77 1/4
13	O	AFT	.050	55 1/4
		Fwd	.125	"
14	O	AFT	.075	86 1/4

visible w/o NDI.

STR 10L [illegible] TO [illegible]
MAJOR CRACK [illegible]

APPENDIX F

AIR CARRIER MANUAL

Form No. M-86

NON-DESTRUCTIVE TESTING REPORT

1. Aircraft N 13711 Date: [illegible]

2. Aircraft Total Airframe Hours: _____

3. Aircraft Total Number Landings: _____

4. If other than 1 thru 3 above, identify unit.

   Nomenclature: [illegible] Manufacturer: Boeing

   Part No.: _____ Serial No.: _____

   Time Since Last Overhaul _____ Total Time (if available) _____

5. Type of Non-Destructive Testing method used:

   a. Radiographic _____ e. Magnetic _____ Type _____

   b. Ultrasonic _____ f. Dye-Penetrant _____

   c. Eddy Current ✓ g. Black Light _____

   d. Visual _____ h. Magnifying Glass _____ Power _____

6. Inspection accomplished in accordance with (i.e., Alert Service Bulletin, A.D. Note, Inspection Special Project, Service Bulletin, Service Letter, Special Instructions). _____

7. Inspection (Item 5) accomplished by [illegible]

8. X-Ray verified (2nd reading) by _____

9. Discrepancies found (If none, note "None Found"). None Found

10. Corrective action taken (If none, note "None Taken"). _____

APPENDIX F

AIR CARRIER MANUAL

VOLUME 2 MAINTENANCE

Revised: April 12/68

Section VII
Page 7.186-1

Form No. M-86

11. If any further information is submitted, add to a separate sheet of paper and attach to this report.

Separate page attached YES_____ NO___✓___

12. Contents of this report checked, further action required.

YES_____ NO___✓___

Signed_____
Senior Inspector
or
Quality Control Inspector

13. If further action was taken, what were the findings_____

_____

_____

_____

_____

14. This report is considered completed and accurate to the best of my knowledge and requires no further action.

Date:_____

Signed:_____
Senior Inspector
or
Quality Control Supervisor

AIR CARRIER MANUAL

Form No. M-86

NON-DESTRUCTIVE TESTING REPORT

1. Aircraft N [illegible] Date: [illegible]
2. Aircraft Total Airframe Hours: _____
3. Aircraft Total Number Landings: _____
4. If other than 1 thru 3 above, identify unit.

   Nomenclature: [illegible] Manufacturer: [illegible]

   Part No.: _____ Serial No.: _____

   Time Since Last Overhaul _____ Total Time (if available) _____
5. Type of Non-Destructive Testing method used:

   a. Radiographic _____ e. Magnetic _____ Type _____

   b. Ultrasonic _____ f. Dye-Penetrant _____

   c. Eddy Current _____ g. Black Light _____

   d. Visual _____ h. Magnifying Glass _____ Power _____
6. Inspection accomplished in accordance with (i.e., Alert Service Bulletin, A.D. Note, Inspection Special Project, Service Bulletin, Service Letter, Special Instructions). [illegible]
7. Inspection (Item 5) accomplished by [illegible]
8. X-Ray verified (2nd reading) by _____
9. Discrepancies found (If none, note "None Found"). [illegible]

   [illegible]
10. Corrective action taken (If none, note "None Taken"). _____

APPENDIX F

AIR CARRIER MANUAL

VOLUME 2 MAINTENANCE

Revised: April 12/68

Section VII
Page 7.186-1

Form No. M-86

11. If any further information is submitted, add to a separate sheet of paper and attach to this report.

Separate page attached YES_____ NO ✓

12. Contents of this report checked, further action required.

YES_____ NO ✓

Signed _____
Senior Inspector
or
Quality Control Inspector

13. If further action was taken, what were the findings_____

_____

_____

_____

_____

14. This report is considered completed and accurate to the best of my knowledge and requires no further action.

Date:_____

Signed:_____
Senior Inspector
or
Quality Control Supervisor

AIR CARRIER MANUAL

Form No. M-86

NON-DESTRUCTIVE TESTING REPORT

1. Aircraft N 73711 Date: 05-06-87

2. Aircraft Total Airframe Hours: _____

3. Aircraft Total Number Landings: _____

4. If other than 1 thru 3 above, identify unit.

   Nomenclature: [illegible] Manufacturer: BOEING

   Part No.: _____ Serial No.: _____

   Time Since Last Overhaul _____ Total Time (if available) _____

5. Type of Non-Destructive Testing method used:

   a. Radiographic _____ e. Magnetic _____ Type _____

   b. Ultrasonic _____ f. Dye-Penetrant _____

   c. Eddy Current ✓ g. Black Light _____

   d. Visual _____ h. Magnifying Glass _____ Power _____

6. Inspection accomplished in accordance with (i.e., Alert Service Bulletin, A.D. Note, Inspection Special Project, Service Bulletin, Service Letter, Special Instructions). [illegible] 737-53A[illegible]

7. Inspection (Item 5) accomplished by [illegible]

8. X-Ray verified (2nd reading) by _____

9. Discrepancies found (If none, note "None Found"). [illegible]

10. Corrective action taken (If none, note "None Taken"). _____

APPENDIX F

AIR CARRIER MANUAL

VOLUME 2 MAINTENANCE

Revised: April 12/68

Section VII
Page 7.186-1

Form No. M-86

11. If any further information is submitted, add to a separate sheet of paper and attach to this report.

Separate page attached YES_____ NO ✓

12. Contents of this report checked, further action required.

YES_____ NO ✓

Signed_____
Senior Inspector
or
Quality Control Inspector

13. If further action was taken, what were the findings_____

_____

_____

_____

_____

14. This report is considered completed and accurate to the best of my knowledge and requires no further action.

Date:_____

Signed:_____
Senior Inspector
or
Quality Control Supervisor

APPENDIX F

STG 146. NO OF INCHES FROM STA 727

HOLE 1. O AFT .050 67 1/2

HOLE 2. O AFT .050 181 1/2

STA 727 TO .016 RT SIDE

APPENDIX G

NATIONAL TRANSPORTATION SAFETY BOARD
Bureau of Technology
Washington, DC 20594

SUMMARY OF PREVIOUS REPAIRS ON N73711

The following summary of existing skin repairs or rework areas was derived from the on-scene examination of the airplane in Kahului, Maui, Hawaii, from April 29 to May 6, 1988.

LEFT SIDE OF AIRPLANE

BS 540 -- Scab patch from S-1 to S-2L, using universal rivets. Replacement of countersunk rivets on forward skin of the butt joint from S-4L to S-4R, and forward along S-4L for the remaining short length (S-4R missing).

BS 580 -- Scab patch with countersunk rivets between S-2L and S-3L.

BS 727A -- Scab patch with countersunk rivets, 6"x 7", just above S-17L

BS 927 -- Scab patch between S-2L and S-3L, universal rivets, 5" long.

BS 1016 -- Scab patch with countersunk rivets above S-19L, 6"x 13".

BS 1121 -- Scab patch with countersunk rivets underneath third vortex generator, 8"x 8".

BS 767 to 818 -- flush patch in top skin of S-20L lap joint, 6" high, countersunk rivets. Repair continued forward under the aft portion of the wing to body fairing.

BS 747 to 1016 -- Top row of rivets at S-25L lap joint were replaced with blind universal rivets.

BS 927 to 947.6 -- Blind universal rivets in the top row of the lap joint at S-20L.

RIGHT SIDE OF AIRPLANE

BS 420 -- Scab patch with universal rivets, 8" long x 6" high, centered over S-17R.

BS 500B -- Scab patch with universal rivets, 7" long x 6" high, centered around S-15R.

BS 727A -- Scab patch with countersunk rivets, 6"x 8", centered about S-15R.

BS 727B -- Scab patch with countersunk rivets along S-17R, 2" aft of frame and 8" forward, 7" high centered around the stringer.

BS 890 -- Scab patch with countersunk rivets in forward frame of aft cargo

APPENDIX G

door, 3"x 5" starting below S-19R.

BS 840 -- Scab patch with countersunk rivets in aft frame of aft cargo door, 1"x 7" starting at S-19R; scab patch with countersunk rivets, 1"x 4", starting above S-23R.

BS 960 -- Scab patch with countersunk rivets at forward edge of aft galley service door, 3"x 4", at S-14R location.

BS 970 -- Scab patch with countersunk rivets at mid-span of aft galley service door aft of the lower door hinge lower corner, 2"x 3", at S-15R location.

BS 1016 -- Scab patch with countersunk rivets in top skin of lap joint at S-16R, 4"x 4", centered about stringer.

BS 1104 -- Scab patch with countersunk rivets under second vortex generator, 8"x 7".

BS 1121 -- Scab patch with countersunk rivets under third vortex generator, 8"x 7".

BS 1121 to 1138 -- Scab patch with countersunk rivets above APU access door hinge line, 9" high.

BS 767 -- three rows of rivets replaced in S-20R lap joint, center row with universal rivets, continued forward under wing to body fairing.

BS 897 to 1016 -- top row of rivets at S-25R replaced by universal head rivets. Replacement started again at BS 767 and continued forward under wing to body fairing.

GENERAL

Several areas of rivets replaced by universal rivets around BS 747 to 807, S-27L and R; S-25R at BS 787.

APPENDIX H

SDR SUMMARY

NATIONAL TRANSPORTATION SAFETY BOARD
Bureau of Technology
Washington, DC 20594

February 13, 1989

BOEING 737 FUSELAGE SERVICE DIFFICULTY REPORT INFORMATION

A. ACCIDENT

Location:	Near Maui, Hawaii
Date:	April 28, 1988
Time:	1347 Hawaiian Standard Time
Aircraft:	Aloha Airlines, Inc. Flight 243, Boeing 737-297, N73711
Accident No.:	DCA-88-M-A054

B. SUMMARY OF SERVICE DIFFICULTY REPORT INFORMATION

1. General

The Federal Aviation Administration's (FAA) Service Difficulty Report (SDR) data base was queried for information pertaining to the Boeing 737 fuselage. It was found that 3,387 records existed from the beginning of the current data base (January, 1983) to February 7, 1989. This number was reduced to 2,082 records by eliminating all models of the 737 that were not produced as part of the first 291 airplanes.

Between January, 1983 and the date of the accident, a total of 1,352 records were found. Of these, 198 were reports of fuselage skin cracks, and ten of these reports were of cracking at or near lap joints. Six of the ten reports involved lap joints in the upper lobe, while the remaining four were from the lower lobe of the fuselage. Six of the reports were submitted by Piedmont Airlines, three by Aloha (including a lower lobe crack on the accident airplane), and one by American Airlines. The report by American was the only report submitted subsequent to the effective date of Airworthiness Directive (AD) 87-21-08, November 2, 1987. All of the airplanes cited in the ten reports were manufactured within the first 291 airplanes.

APPENDIX H

A summary of the information contained in the preceding cracking reports is given below:

I. Upper Lobe Reports

September 8, 1983 -- Piedmont Airlines model -201, N734N (line no. 29), total time 38,155 hours: "Found fuselage skin cracked at FS (fuselage station or body station, BS) 727A between stringers 14L and 15L. Crack was one inch long."

October 11, 1984 -- Aloha Airlines model -297, N73713 (line no. 222), total time 24,814 hours: "Crack in the right side fuselage skin panel longitudinal lap joint along the fastener line of stringer 10R between BS 727A-727B". SEE ATCH. SDR

March 16, 1987 -- Piedmont Airlines model -201, N/44N (line no. 160), total time 45,337 hours: "On walkaround, found fuselage skin cracked in skin lap joint below left cabin windows, station 370 to 435, a total of 21 cracks. 10 - .375 inch, 4 - .5 inch, 1 - 1 inch, 2 - 1.25 inch, 2 - 1.375 inch, 2 - 1.5 inch."

July 17, 1987 -- Piedmont Airlines model -2A1, N767N (line no. 188), total time 46,367 hours: "During C-check found fuselage skin cracked at lap joint station 370 to 380 stringer 14R."

July 17, 1987 -- on line no. 188 above: "Found fuselage skin cracked at lap joint station 727 stringer 4R."

November 27, 1987 -- American Airlines model -247, N470AC (line no. 140), total time 45,185 hours: "During BC-3 check, found a 5.0 inch crack in fuselage skin at stringer 14L, station 366."

II. Lower Lobe Reports

October 6, 1983 -- Piedmont Airlines model -201, N746N (line no. 207), total time 36,267 hours: "Found 1.5 inch crack in fuselage skin on right side above stringer 20R and aft of FS 727."

November 23, 1983 -- Aloha Airlines model -297, N73711 (line no. 152), total time 26,049 hours: "Found multiple skin cracks approx 3 inches long above left fuselage skin lap between stringers 20L and 21L at FS 756.9 to 816.9."

December 16, 1983 -- Aloha Airlines model -297, N73712 (line no. 163), total time 24,340 hours: "Fuselage skin bulged and cracked between S-25R and S-26R forward of FS 1016."

November 9, 1986 -- Piedmont Airlines model -201, N745N (line no. 172), total time 44,321: "During C-check inspection found one inch crack in fuselage skin at station 727 stringer 20R."

2. Aloha Fleet Report Summary

Of the 2,082 reports that were submitted prior to the accident, 18 pertained to airplanes in the Aloha fleet. Three were the lap joint crack/corrosion reports previously cited, and two were upper lobe skin cracking reports where lap joint involvement could not be established from the information given. Three of the reports pertained to lower lobe skin corrosion, with an additional three reports citing corrosion at cargo door frames and the nose gear wheel well structure. The remaining seven reports involved cracks in fuselage structure other than skin or lap joints.

Brian S. Richardson
Aerospace Engineer

C04

APPENDIX H

DEPARTMENT OF TRANSPORTATION
FEDERAL AVIATION ADMINISTRATION

Service Difficulty Report
AERONAUTICAL EQUIPMENT

RIS: FS 0070-1

MAJOR EQUIPMENT IDENTITY

	MANUFACTURER	MODEL/SERIES	SERIAL NUMBER	N- 73713
AIRCRAFT	BOEING	B737-297	20242	
POWERPLANT				
PROPELLER				

PROBLEM DESCRIPTION

DATE	STATUS	SOURCE	ATA	AIRCRAFT TYPE	N-	CONTROL NO.
10/02/84	Orig-Closed	TSA	53-30	B737-297	73713	1014004

GN

TEST During routine "C" check inspection, observed a 7.5" long crack in the right side fuselage skin panel longitudinal lap joint along the fastener line of stringer 10R between stations 727A and 727B. The crack is typical of Service Bulletin 53-1039. The discrepant skin was cut out and repaired with reference to the Structural Repair Manual, Subject 53-30-3, Figure 16.

SPECIFIC PART CAUSING PROBLEM A/C Total Time: 24,814 A/D Total Landings: 67,176

PART NAME	PART NUMBER	PART DESCRIPTION	SERIAL NUMBER
Fuselage Skin	--	Crack	

COMPONENT/APPLIANCE ABOVE PART INSTALLED ON | TIME | 24,814 | DATE

MANUFACTURER	MFG MODEL/SERIAL NUMBER	SERIAL NO.

SUBMITTED BY

D. E. Lowry D. E. Lowry
KR-FKNO-13

K E O IN

FAA Form 8070-1 (5-73) SUPERSEDES PREVIOUS EDITION Shaded areas are for FAA USE ONLY.

APPENDIX I

BOEING MGOS ALOHA AIRLINES MAINTENANCE EVALUATION

Aloha Airlines

MAINTENANCE

EVALUATION

Attachment to

M-7360-87-3169

Prepared By:
Maintenance and Ground Operations Systems - Customer Support,
The BOEING Commercial Airplane Company.

APPENDIX I

January 30, 1988
M-7360-87-3169
File: 0100/ALO

Aloha Airlines
Attention: Mr. Thomas F. Derieg
Vice President, Operations
P.O. Box 30028
Honolulu International Airport
Honolulu, HI 96820

Subject: Boeing Maintenance Evaluation
Aloha Airlines (ALO), November 10 - 19, 1987

Reference: Letter, Request for Evaluation,
T. Derieg to R. Oldani, 27 October, 1987

Gentlemen:

In response to the reference request, a Boeing team consisting of Peter Ansdell (team leader), Richard Fugate, Tibet Girsy and John Hall from our Maintenance and Ground Operations Systems (MGOS) organization conducted the subject evaluation.

The purpose of the Boeing team's visit was to conduct an evaluation of Aloha Airlines's Maintenance operations. Observations and recommendations have been included in the attached report which should be of assistance to improve productivity, enhance technical operating efficiency and assure effective maintenance standards.

We appreciate having had the opportunity to work with your technical staff again and convey our thanks for the excellent cooperation and courtesy shown to our team members during this visit.

Please confirm your receipt of this report and feel free to make any comments, or request any additional information or assistance regarding its contents.

Very truly yours,

CUSTOMER SUPPORT

R. L. Oldani
Manager, Maintenance and
Ground Operations Systems

Attachment

APPENDIX I

Attachment to
M-7360-87-3169
Page 1

TABLE OF CONTENTS

		PAGE
PART I.	INTRODUCTION	2
PART II.	EXECUTIVE SUMMARY	3-7
1.	General	3
2.	Summary of Recommendations	3
3.	Conclusion	7
PART III.	TECHNICAL DETAILS	8-29
1.	General	8
2.	Technical Policies and Procedures Manual	8
3.	Organization	9
4.	Quality Assurance	11
5.	Reliability	12
6.	Engineering	13
7.	Planning and Production Control	14
8.	Shops	17
9.	Maintenance	18
10.	Maintenance Program	20
11.	Supplemental Structural Inspection	22
12.	Technical Training	24
13.	Computerization	25
14.	Technical Supply	27
15.	Industrial Safety	28
16.	Manpower	28
17.	Communication	29

PART IV SUPPORTING DATA AND CHARTS

Appendix A - Organization Chart - ALO Management
Appendix B - Organization Chart - ALO Technical Division
Appendix C - Typical Operator Technical Organization
Appendix D - Typical Quality Assurance Department
Appendix E - Proposed ALO Technical Organization
Appendix F* - Supplemental Structural Inspection Data
Appendix G* - Boeing Safety Procedures, First Aid/CPR Manuals

* These documents and data are being sent separately by M-7360-88-0279, dated January 30, 1988.

APPENDIX I

Attachment to
M-7360-87-3169
Page 2

PART I. INTRODUCTION

In response to a request from Mr. Thomas Derieg, Vice President, Operations, a team from the Boeing Commercial Airplane Company, Maintenance and Ground Operations Systems (MGOS) organization within the Customer Support Division conducted an evaluation of Aloha Airlines's (ALO) maintenance operations during November 10 - 19, 1987. The Boeing team consisted of Peter Ansdell (team leader), Richard Fugate, Tibet Giray and John Hall. The team members visited the Aloha Airlines maintenance facility located at Honolulu International Airport.

The purpose of this visit was to conduct an evaluation of Aloha Airline's technical operations by making observations and recommendations to assist ALO to enhance technical operating efficiency, improve productivity and assure a high standard of maintenance.

This report has been divided as follows:

PART I - INTRODUCTION
PART II - EXECUTIVE SUMMARY
PART III - TECHNICAL DETAILS
PART IV - SUPPORTING DATA, CHARTS, ETC.

The team members wish to express their appreciation to the following airline personnel for their cooperation, assistance and courtesy extended during this visit:

Thomas Derieg	Vice President, Operations
James Williamson	Vice President, Development
Henry Arii	Staff Vice President, Maintenance
Frederick Medina	Director, Maintenance
Ralph Akutagawa	Manager, Production Planning
Bob Takamine	Manager, Quality Assurance
Gene Rodrigues	Manager, Base Maintenance
Darwin Hammersley	Manager, Maintenance Support
Ed Matsumoto	Senior Inspector
Robert Okimoto	Inspector
John Wade	Supervisor, Shops

Special appreciation is expressed to Mr. Henry Arii for making the team's arrangements for this visit. A suitable work area was provided, the day-to-day meetings were effectively coordinated and an excellent tour was conducted of the Aloha Honolulu facility.

Peter A. Ansdell

Richard L. Fugate

Tibet Giray

John Hall

APPENDIX I

Attachment to
E-7360-87-3169
Page 3

PART II. EXECUTIVE SUMMARY

1. GENERAL:

This evaluation by the Boeing team was conducted in accordance with the request of Mr. Thomas Dorieg, Vice President, Operations.

PART II is limited to highlights of significant recommendations relevant to this evaluation for executive consideration and a conclusion. PART III contains the detailed description of the technical aspects of the evaluation. PART IV includes appendices consisting of charts and other supporting data.

2. SUMMARY OF RECOMMENDATIONS:

The following contains a summary of recommendations (these are repeated in PART III accompanied by related background details of the topics covered in the various departments):

- Give high priority to completely revamping the Technical policies & Procedures Manual (the Aloha Air Carrier Manual). It should be maintained, kept current, and distributed throughout the Technical Division. Any interim changes between revisions which do not require regulatory authority approval, such as organization changes, etc., could be covered by "Temporary Revisions" or "Advance Information Notices".

- Institute an aggressive program to assure that all copies of the Aloha Air Carrier Manual, as well as all applicable manufacturer and vendor technical manuals and documents distributed throughout the Technical Division, are maintained up-to-date.

- Consider the proposed organizational changes shown in Item 3 of PART III - TECHNICAL DETAILS (also shown in Appendix E). This includes the forming of new Engineering and Reliability sections and covers other areas such as Technical Library & Publications; Technical Training; Quality Assurance; Planning & Production Control; and Technical Supply.

- Rotate all inspectors through a training program on inspection techniques with special emphasis on corrosion detection. Encourage inspectors to be more assertive in their dealings with Aircraft Services.

- Either assign extra inspectors to cover the shops or have Quality Assurance delegate (in writing) appropriate shop personnel with the necessary inspection approval authority.

- Assure that Quality Assurance conducts random audits (unannounced spot checks) of Honolulu Line Maintenance (both ALO and contract flight lines); component shops and stores on a frequent basis and the outstations at least once a year.

APPENDIX I

Attachment to
M-7360-87-3169
Page 4

- Construct a dust free, temperature controlled laboratory for NDT, borescope, and calibration equipment.

- Re-evaluate all 737 components as regards the maintenance control process that would be best suited to each (Hard Time - HT, On Condition - OC, or Condition Monitoring - CM).

- Consider developing achievable long, medium and short range production plans (each containing the appropriate level of detail) taking into account availability and requirements for manpower, facilities, equipment and material.

- By recording manhours for all scheduled and unscheduled maintenance tasks carried out on the airplanes over a period of time, norms can be established against which future performance can be measured. Such data will assist in achieving more realistic production planning and better estimates of airplane downtimes for scheduled checks. Manhour trends could also be used as a parameter to be used in the reliability program.

- Consider initiating the practice of preparing a planning chart to be used by the maintenance department as a guide in sequencing the items of work to be accomplished. By indicating the completed work, this flow chart would provide an effective means of monitoring the progress of a check.

- Ensure that all shop planning and production control are the responsibility of the Planning & Production Control (PPC) department. No shop should carry out any tasks on hardware until a work order is received from PPC. PPC should establish priorities for shop work load based on stockroom requirements for serviceable components.

- Develop a comprehensive component tracking system covering their location from stores to airplane, through the repair shops, and back to stores. This would help to reduce the unusually high number of unserviceable spares which have accumulated in certain shops over the past years. This tracking system could ideally be computerized.

- Encourage the PPC manager and senior members of the staff to visit the PPC departments of other operators and join aviation industry organizations on this subject.

- Consider changing the color of the unserviceable components tags to red and the serviceable components tags to green.

- Conduct an inventory exercise to determine how many parts are presently in the component shops. A decision should then be made as to whether they should be scrapped, disposed of, or repaired as part of the overall spares inventory.

- Review and expand the equipment calibration program.

APPENDIX I

Attachment to
M-7360-87-3169
Page 5

- Consider providing in the hangar, a board with slots on which task cards can be grouped by aircraft zone, skills required and work progress status. This will assist the maintenance foreman in issuing work to his mechanics and provide visibility of progress.

- Establish better control and accountability of tools. A separate tool crib area is recommended.

- Review the maintenance program concepts detailed in Item 10, PART III and advise Boeing of the program preferred by ALO so that details can be developed by the Boeing Maintenance & Ground Operations Systems (MGOS) organization.

- Before initiating the new 737 maintenance program, perform a complete structural inspection and incorporate certain key service bulletins on all ALO 737 airplanes. In the absence of an Engineering department at ALO, Boeing Customer Support Service Engineering will prioritize the "extended life" service bulletins applicable to ALO's 737s.

- Ensure that all personnel responsible for planning, developing, checking, implementing and conducting the ALO Supplemental Structural Inspection Document (SSID) program, familiarize themselves with the guidelines, examples and procedures in the 737 SSID. Particular attention should be paid to the notes and instructions associated with the DTR check forms.

- Correct all existing DTR check forms errors and misinterpretations (listed in Appendix F). Note, there may be additional errors on the existing DTR check items that are not listed in Appendix F.

- Add a procedure to the ALO Air Carrier Manual for reporting structural discrepancies in accordance with Section 6 of the SSID. Ensure that all cracks and previously unreported occurrences of significant corrosion involving a Significant Structural Item (SSI) that were detected during earlier SSID inspections be reported to Boeing.

- Provide 737 training to all maintenance mechanics who have not received training for this model airplane.

- Consider adopting a policy requiring all technical personnel to receive a minimum of one week of refresher training each year. The course should include review of the Aloha Air Carrier Manual and extra training should be given to inspectors and foremen.

- Provide management development and leadership courses to all recently appointed supervision.

- Obtain cassettes on various specialized training aspects to be used in the hangar or shops to assist with on-the-job training.

APPENDIX I

- Consider holding specialized training courses such as structural repair, corrosion prevention and control, rigging and nondestructive test (NDT) methods.

- Formulate a master plan for the development of computerization in the technical division utilizing inputs from all potential users.

- Prepare certain technical records, such as service bulletin accomplishment accountability for each airplane, by manual methods until such time as a computerized data base is set up. Initial priority should be given to recording the status of the structural service bulletins. These should be particularly useful to ALC while operating several fleet leader high cycle airplanes and where airplanes are being added or removed from the fleet due to the various leasing arrangements.

- Establish a separate area devoted to the shipping and receiving of parts.

- Adopt a policy whereby components removed from the airplane are first sent to Stores and placed in a quarantine area. When it can be determined that a replacement part does not solve the airplane problem, the removed component can be tagged as serviceable and returned to stock.

- Consider assigning a Safety Coordinator under the Quality Assurance department to cover the Technical Division.

- Encourage an interest in safety by forming an employee safety committee and appointing "safety monitors".

- Make an intensive effort to hire more personnel, as needed in each department in the Technical division, and bring manpower up to industry levels. For all supervisory and management positions, it is desirable to assign suitable understudies who can be trained to assume the position of the applicable supervisor or manager in their absence.

- Ensure that there is a good rapport between the Flight Operations and Technical Divisions to make sure that each appreciates the other's problems and constraints, and highlight what the Technical Division is doing to find solutions. Flight Operations can provide valuable inputs on actual operating condition and technical defects. This in turn can contribute to more effective trouble shooting, timely rectification, minimizing delays, improving dispatch reliability and reducing costs.

3. CONCLUSION:

Maintenance Engineering evaluations by the airframe manufacturers have the unique advantage of providing operators with an independent perspective which often avoids the "blind spots" that internal audits possess due to "home born-and-bred cultures". A feedback is

APPENDIX I

provided of comparison of maintenance performance by a neutral party which highlights strengths and weaknesses of the systems and methods, the health of the airplanes and equipment, and the effectiveness of key personnel and organizational structure.

The Boeing Customer Support Division welcomes this opportunity to provide technical assistance to Aloha Airlines. It is sincerely hoped that by adoption of some of the recommendations in this report, Aloha Airlines technical personnel will be able to enhance their standard of maintenance operations.

APPENDIX I

Attachment to
M-7360-87-3169
Page 8

PART III. TECHNICAL DETAILS

1. GENERAL:

This section, (PART III) of the report provides details of observations and recommendations which concern the operation of the Aloha Airlines Maintenance Division. PART IV contains appendices to this section with supporting data and charts.

At the time of this visit, the ALO fleet was as follows:

AIRPLANE TYPE	REG. NO.	FLIGHT CYCLES	FLIGHT HOURS	ENGINE TYPE	DELIVERY DATE
737-202C	N801AL	47,632	39,935	JT8D-9	OCT. 1968
737-297	N73711	85,300	33,726	JT8D-9	APR. 1969
737-297	N73712	86,493	32,200	JT8D-9	MAY. 1969
737-210C	N4906	47,200	38,995	JT8D-9	MAY. 1969
737-297	N73713	82,336	30,775	JT8D-9	NOV. 1969
737-2A9C	N803AL	46,374	44,385	JT8D-9	APR. 1970
737-2H4	N73717	64,551	38,775	JT8D-9	JUN. 1971
737-2S5C	N802AL	6,527	8,642	JT8D-9	MAY. 1980
737-297	N728AL	29,948	21,598	JT8D-9	FEB. 1982
737-297	N730AL	28,098	10,830	JT8D-9	JUL. 1982
			Total Airplane Fleet		= 10

Seven of the ten airplanes are over 15 years old. Three of the 737s: N73711, N73712 and N73713, are the highest flight cycle airplanes of all Boeing jets currently in operation in the world.

In 1987, the ALO 737 fleet averaged 15.56 flight cycles and 6.0 flight hours per airplane. Mechanical dispatch reliability was an impressive 99.59%.

Aloha operates regional (Hawaiian Islands) routes in an environment known to be highly susceptible to the effects of corrosion.

Appendices A and B show the organization and management personnel at the time of this visit. The total number of Aloha Airlines employees throughout the whole operation was stated to be approximately 1,188. Of these, approximately 200 were employed in the Maintenance and Quality Assurance departments as shown on Appendix B. In comparison to similarly equipped operators, it appears that ALO is short of technical personnel in the offices, shops and hangar (this is discussed in Item 14 - MANPOWER).

2. TECHNICAL POLICIES & PROCEDURES MANUAL:

An airline's Technical Policy & Procedures Manual (TPPM) provides the means of establishing effective maintenance standards and control as well as giving direction on all Technical Division activities.

Attachment to
M-7360-87-3169
Page 9

Operators usually have their Quality Assurance department responsible for ensuring adherence to this manual. The preparation, revision and upkeep of the manual and standard forms are usually the responsibility of an Engineering department and a Technical Publications section (which may be grouped with the Technical Library under Technical Services - see the recommendation on this aspect in Item 3 - ORGANIZATION).

The ALO version of the TPPM is the "Aloha Air Carrier Manual". Although the contents in the various volumes are generally in line with the FAR requirements, there appears to be gaps of no records of revisions for several years, many of the contents do not apply, some procedures (for example, regarding corrosion control) are inadequate and several sections have not been kept up-to-date. Strict control of the distributed copies is required. The "Inspection Alert Bulletins" which are described to be on blue paper and listed, were not available in the copies of the manual which were examined.

- It is recommended that high priority be given to completely revamping the Aloha Air Carrier Manual. The contents should be in accordance with all regulatory authority requirements. A statement should be provided in the introduction describing the policy of how the manual is to be maintained, defining the responsible authorities, the extent of its distribution and who is to keep it current.

- It is recommended that interim revisions to the Aloha Air Carrier Manual which do not require regulatory approval, for example, organizational changes, etc., should be covered by "advance" or "temporary" revisions.

3. ORGANIZATION:

For the Technical Division to function smoothly, it is important to ensure that individual roles are clearly defined and the reporting relationships are properly understood. Personnel should have a clear understanding of the key responsibilities within the organization, be fully aware of who has the authority, and recognize their own accountability, so as to automatically and correctly react and interact to any necessary required action.

Many internal conflicts or bottlenecks can be eradicated or reduced to manageable levels by the careful and proper streamlining of the organizational structure. In this respect, a continual review of the organizational structure may be necessary to cater for factors such as increase in utilization, changes in operational strategies, airplane leasing, meeting regulatory authority requirements, contract maintenance, workload "peaks" and "valleys" and changes of personnel, all of which also require continual upgrading of skills, including technical and administrative development.

Several Technical Division management changes had recently taken place within the six months prior to the visit by the team and these are reflected in Appendices A & B.

APPENDIX I

The Aloha Airlines Technical Division appears to have most of the appropriate sections usually found in similar sized airlines. A typical operator organization is shown in Appendix C. The team observed that the following areas could benefit from various organizational improvements: Engineering; Technical Library & Publications; Technical Training; Quality Assurance; Reliability; Production Planning & Control; and Technical Supply. Aloha Airlines might consider these suggestions should any future technical organization changes be planned (see Appendix E - PROPOSED ALOHA TECHNICAL ORGANIZATION):

- Engineering:

  Typical operator engineering functions are shown in Appendix C. As detailed in Item 6 - ENGINEERING and Appendix E, it is proposed that an Engineering section be formed as either a stand alone department or as part of a new "Technical Services" department including Production Planning & Control, Technical Training and Technical Publications/Library.

- Technical Publications/Technical Library:

  There appears to be a need to expand the Technical Library into a Technical Publications/Technical Library section. By employing some technical writers, revisions could be made to manuals affected by incorporation of service bulletins and other engineering change action. The prime function should be maintaining the Technical Policies & Procedures Manual, standard forms and placards. This section should institute an aggressive program to assure that all copies of the TPPM as well as all applicable manufacturer and vendor technical manuals and documents distributed throughout the Technical Division are maintained up-to-date.

- Technical Training:

  As detailed in Item 11 - TECHNICAL TRAINING, there is a need to form a dedicated Technical Training school and it is proposed that this be under a Technical Services department.

- Quality Assurance (QA):

  A typical QA department and responsibilities are shown in Appendix D. Proposed plans for phasing in various sections of this department are shown in Item 4 - QUALITY ASSURANCE.

- Reliability:

  It appears that an effective Reliability section needs to be created (as recommended in Item 5 - RELIABILITY). Depending on the emphasis of the reliability program, operators usually have a Reliability section under either Technical Services or QA (see Appendix E - PROPOSED ALOHA TECHNICAL ORGANIZATION).

Attachment to
M-7360-87-3169
Page 11

Technical Supply:

In many operators, Technical Supply is a separate department under the Technical Division (see Appendix C). This is also proposed in Appendix E.

4. QUALITY ASSURANCE (QA):

It was observed that the ALO QA department, which is staffed by 12 personnel, has experienced and dedicated personnel. QA is independent of the Maintenance department and the head of QA reports to technical management at one level above that of the head of Maintenance. This is satisfactory and is in conformance with the accepted concept that work verification should not be influenced by production demands. The responsibilities of QA should include surveillance of the entire Technical Division including Technical Supply.

At present, the ALO QA has responsibility for QC (Inspection), Technical Records, the Technical Library and Publications. Other responsibilities, according to the ALO Air Carrier Manual, include the reliability aspects of the continuing analysis and surveillance program.

The ALO inspection function is performed by the participation of inspectors in maintenance checks. All inspections per task cards and service bulletins are carried out by inspectors. All items written up by inspectors for correction are re-inspected and accepted by them after rectification of the discrepancies by mechanics (inspector buy-back). This practice of 100% inspection and buy back by inspectors indicates the commitment in principle by ALO management to have well maintained airplanes. Whereas the team applauds this practice, and the high airplane reliability plus excellent condition of the airplane systems have proven to be outstanding, there is some question regarding the deteriorated structure of the high cycle airplanes. The lack of a corrosion prevention and control program is a factor, but there is also the possibility that specialized inspector training and more assertiveness on the part of inspection is required.

- It is recommended that all ALO inspectors be rotated through a training program on inspection techniques with special emphasis on corrosion detection. In the future, inspectors should also receive specialized training (as listed in Item 12 - TECHNICAL TRAINING).

There have been cases in the past where the Aircraft Services department, in an effort to meet schedules, had painted over or closed up areas of the airplane prior to inspection. This suggests that this may be an area where the QC inspectors should be more assertive and where the Aircraft Service department should be made aware of QC importance. On the other hand, in an effort to not affect production schedules, QC inspectors should review their initial inspection priorities during the early part of their maintenance checks to cover these opened up areas.

APPENDIX I

There did not appear to be any involvement by inspection in the Shops. Built-up engines and overhauled components had tags with no inspection approval indicated.

- It is recommended that additional inspectors be assigned to cover the Shops or appropriate shop personnel be delegated (in writing) inspection and approval authority by QA.

ALO inspectors were not involved with Line maintenance activities at Honolulu or at other stations.

- It is recommended that the QA department conduct random audits (unannounced spot checks) of Honolulu Line maintenance (both ALO and contract flight lines), component shops and stores on a frequent basis and the outstations at least once a year.

The responsibilities of the QC (Inspection) section shown in Appendices D & E covering Stores/Receiving includes inspection of incoming materials and components, hidden damage inspection, proper attention to storage of flammable materials, and parts shelf life limits control. It would be beneficial if this section could also assume some limited responsibility for audits of vendor quality and make recommendations to Technical Supply for the ALO approved vendor list.

In the absence of an Engineering department, QA performs most of the functions usually accomplished by engineers (see Item 4 - ENGINEERING). These functions conflict with the generally accepted role of a QA/QC department. It is analogous to a student writing his own examination text and then grading his own paper.

A part of QC which needs some attention concerns the NDT, borescope, and calibration equipment (instruments and mechanical test). This is important considering the present amount of in-house heavy maintenance. It should be QC's responsibility to control and operate all NDT and borescope equipment, as well as to check and monitor when all calibrations are due throughout the Technical Division. Consolidation of these aspects requires a dust free, temperature controlled laboratory for this sensitive equipment. The laboratory should be located adjacent to, or within the hangar.

- It is recommended that a laboratory be constructed for NDT, borescope and calibration equipment.

5. <u>RELIABILITY</u>:

The ALO Air Carrier Manual states that the reliability program is administered by Quality Assurance and that revisions are made to the airplane maintenance Operations Specifications and the Component Maintenance Schedule.

APPENDIX I

Attachment to
M-7360-87-3169
Page 13

QA also has responsibility for the ALO Propulsion System Reliability Control Program (PSRCP), the Hydraulic Internal Leakage Test (HILT) system and a Continuing Surveillance & Analysis program consisting of:

- Data Collection & Surveillance;
- Data Analysis;
- Corrective Action (based on exceedance of "alert values" and review by monthly Reliability Control Board meetings).

The present ALO Component Maintenance Schedule has most components incorrectly listed as "on condition" (OC) when they should be either "hard time" (HT) or "condition monitored" (CM). To classify a component as OC, there must be some scheduled inspection, check, or tests which ensure that the component will function properly until the next scheduled check.

- It is recommended that ALO consider re-evaluating all 737 components as regards the maintenance control process that would be best suited to each (HT, OC, or CM). Data will then need to be collected and analyzed for CM components. Scheduled on-airplane checks should be identified for OC components.

An effective program administered by a reliability section under QA should be in place in order to realize the full advantages of adopting condition monitoring for component control. Also, this section should consider the use of computerized reliability software programs.

- It is recommended that a Reliability section be formed reporting to the Quality Assurance section.

The organization of Quality Assurance and the proper management of a reliability program as just described will provide an effective system for continuing analysis and surveillance of maintenance and inspection programs.

6 ENGINEERING:

The responsibilities of an Engineering department include evaluation and implementation of manufacturer's Service Bulletins, Airworthiness Directives, airline originated modifications and repair action, design, research, studies, reports and investigations, preparation of specifications, drawings and standards, establishment and control of the airplane, engine and component maintenance schedule specifications, and providing technical assistance (for example, in trouble shooting) as required by Maintenance, Shops and Flight Operations. The manufacturer Service Bulletins receive a thorough assessment as to merits, payback, and whether they provide practical improvements or effective solutions to problems.

APPENDIX I

It appears the most urgent need at ALO is for a structural engineer. The deteriorated condition of the older, high cycle ALO 737s and the four 737-200Cs which had been previously operated in Alaska and remote regions of Canada on rough, unimproved runways, requires that special attention should be given to their structural integrity. This should include proper corrosion prevention and control, complete definition of structural repairs and terminating correction, as well as review for incorporation of selected structural service bulletins recommended by Boeing to extend airplane life. The team discussed and left a complete list of these selected structural service bulletins applicable to all ten ALO 737s. These bulletins reflect the influence of operator service experience, regulatory authority action, new materials and processes. They provide estimated incremental structural life and recommended incorporation threshold data.

In the present absence of an ALO Engineering department, Boeing Customer Support Service Engineering is studying the lists of selected "extended life" service bulletins (SBs) applicable to all ALO airplanes and will be notifying ALO through the Boeing Field Service office of a priority category for each SB applicable to ALO's operations and environment. These lists may be supplemented by other SBs considered beneficial to ALO 737s.

Three of the 737-200Cs will become "Supplemental Structural Inspection Document (SSID) candidate airplanes" this year. However, the SSID items which will need to be incorporated into these airplanes' maintenance program will only involve significant structural items associated with the individual cargo airplane features.

7. <u>PLANNING AND PRODUCTION CONTROL</u>:

Operators generally have their Planning & Production Control (PPC) sections responsible for the planning, scheduling of maintenance operations and establishment of appropriate controls. This assures production schedules meet the time limitations as specified in the airplane, engine and component maintenance operations schedule section in the Technical Policies & Procedures Manual.

Effective maintenance control is achieved by scheduling maintenance action in the proper sequence and at the proper time. It is desirable that competent personnel, equipment, facilities, tools, spares and materials be available to accomplish the assigned maintenance task. This section acts as a regulator for the maintenance cycle providing safeguards to prevent:

- Exceeding approved time interval limitations;
- Backlog accumulation of work, possibly resulting in loss of airplane availability;
- Errors resulting from unplanned and hastily performed work;

APPENDIX I

Attachment to
M-7360-87-3169
Page 15

- Manpower shortages;

- Spares/material shortages for major checks;

- Facility overload;

- Failure to comply with regulatory authority regulations.

Some maintenance actions are performed on a non-routine (unscheduled) basis. In such cases, this section should provide the required flexibility to compensate for variations in workloads and still control the production schedule. Operators usually have their PPC coordinate the efforts of Engineering, Quality Control, Maintenance, Overhaul Shops and Technical Supply.

In general, the ALO PPC staff accomplish the following:

- Keep track of airplane utilization (accumulated flight hours and cycles);

- Schedule airplane maintenance tasks by making sure that intervals or thresholds are not exceeded for any time controlled maintenance requirement;

- Assemble the paperwork for airplane checks;

- Track the hard time controlled components by location, calendar time, hours, or cycles;

- Perform material planning;

- Undertake special projects which would normally be accomplished by an Engineering department at other operators;

- Arrange for the repair or overhaul of 737 components at vendors or other outside repair agencies.

At many operators, effective planning for a maintenance check includes a thorough review of the work package, estimating the workload and elapsed time requirements for each task and preparing a work flow chart that schedules each item of work at the optimum time. To be able to do this, an adequate data base of manhour statistics has to be established over a period of time. ALO's Aircraft Services maintenance department was not recording manhours expended to perform maintenance tasks. It also appeared that personnel in PPC were so occupied with daily problems and expediting paperwork that there was hardly enough time for effective planning.

The following recommendations are made regarding PPC:

- Consider developing achievable long, medium and short range production plans (each containing the appropriate level of detail) taking into consideration availability and requirements for manpower, facilities, equipment and material.

APPENDIX I

Attachment to
M-7360-87-3169
Page 16

- By recording manhours for all scheduled and unscheduled maintenance tasks carried out on the airplanes over a period of time, norms can be established against which future performance can be measured. Such data will assist in achieving more realistic production planning and better estimates of airplane downtimes for schedule checks. Manhour trends could also be used as a parameter to be used in the reliability program.

- Consider initiating the practice of preparing a planning chart to be used by the maintenance department as a guide in sequencing the items of work to be accomplished. By indicating the completed work, this flow chart would provide an effective means of monitoring the progress of a check.

The ALO PPC has a computer list showing the part numbers and quantities of rotable components in the ALO inventory. However, except for hard time components and units sent out on repair orders, the PPC does not know whether a specific unit is installed on an airplane, is a serviceable spare, or is waiting to be repaired in some ALO shop. Accumulated hours and cycles on these units are not kept. Mechanics removing components from airplanes take them directly to the applicable component shop. By this practice, the component does not go through the stores or a quarantine area and the accompanying paperwork is not sent to the PPC. Each shop decides whether a specific unit should be repaired or sent to an outside overhaul agency.

The following recommendations are made:

- It is desirable that all shop production planning and control activities be assigned to the PPC. No shop should carry out any tasks on hardware until a work order is received from PPC. PPC should establish priorities for these shop work orders by closely monitoring shop work loads and stockroom requirements for serviceable components.

- ALO should develop a comprehensive component tracking system (including those components on OC and CM which are currently not tracked) covering their location from stores to airplane, through the repair shops, and back to stores. This would help to reduce the unusually high number of unserviceable spares which have accumulated in certain shops over the past years (see Item 8 - SHOPS). This tracking system could ideally be computerized (see Item 12 - COMPUTERIZATION).

The ALO PPC also has responsibility for material planning. Initially, reorder levels for the expendable parts were assigned by PPC. These values were entered into the inventory control computer program. The Purchasing department now orders parts automatically based on these reorder levels, resulting in no involvement by PPC except when there is a problem. Rotable component purchases and repair orders are handled by PPC. The total inventory of spares increased from $7.8 million to $8.5 million in the first six months of 1987. Approximately $5 million worth of the total spares

Attachment to
M-7360-87-3161
Page 17

inventory consists of rotable components. The team was informed that it was a rare occurrence for an ALO 737 flight to be delayed due to the lack of a spare part. It appears that ALO could save a substantial amount of money by implementing an effective component control and tracking system as discussed earlier. This would permit more efficient use of the accumulated spares inventory.

At present, the ALO PPC is staffed by three planners and a manager who reports to the Director, Maintenance. It appears that this department is understaffed even to effectively carry out its present responsibilities. If recommendations from this report are implemented, there may be a need for additional manpower. However, savings that can be achieved by a better functioning PPC should justify the extra personnel acquired.

It appeared that the ALO PPC staff had been introduced to working in this type of work with minimal preparation or prior training in PPC skills. Even though the members of the staff are very conscientious and hard working, they have had to "rediscover the wheel" on their own. Consequently, they are not quite fully aware of the state-of-the-art in airline PPC.

- It is recommended that the PPC manager and senior members of the staff be given the opportunities to visit PPCs of other operators and join aviation industry organizations on this subject.

The additional responsibilities recommended in this section encompassing not only aircraft maintenance activities, but also the shop component PPC, indicates that it would be preferable for the PPC function to be independent from the maintenance department. Either a separate Planning & Production Control (PPC) group should be formed reporting to the Staff Vice President, Maintenance & QA, or the PPC should report to the Manager, Technical Services (as proposed in Item 3 - ORGANIZATION and shown in Appendix E). The separate PPC could then handle the carry over discrepancies and unscheduled work more efficiently on a priority basis and keep each to an absolute minimum due to the effective monitoring and scheduling.

8. <u>SHOPS</u>:

The ALO shops consist of those associated with aircraft overhaul, accessories (components) and electrical & electronics. Those supporting aircraft overhaul consist of sheet metal, painting, welding, upholstery and emergency equipment. The accessories shops consist of engine system components, power plant build-up and teardown, APU and components, landing gear overhaul, modifications, repair and service, wheels, tires & brakes, and machine shop. The radio, instrument and electrical shops maintain, repair, and bench check radios and navigation equipment.

APPENDIX I

A large portion of the sheet metal personnel had been hired in the last few months and approximately a third of the electrical & electronic personnel have been hired during the last year. On the job training (OJT) was being carried out in the shops by supervision during the team's visit to improve the skill level.

Whereas some of the accessories shops such as wheels, tires & brakes, power plant and APU were adequately supporting the operational needs of the airline, there were some deficiencies with other component shops. Considerable investment in many components is being wasted with many parts lying around awaiting repair, creating excess spares and occupying valuable shop space. Examples included numerous APU solenoids awaiting repair in one shop, and in another, a forward support fitting, part number 65-555C7-1, removed from airplane N73711 on February 25, 1972, had a green unserviceable tag which had become yellow with age.

- It is recommended that ALO consider changing to red tags for unserviceable components and green tags for serviceable components.

The excess of parts in the component shops suggests that there are problems with the tracking or proper control of components through the shop or else it could be due to the shortage of personnel.

- It is recommended that ALO conduct an inventory exercise to determine how many parts are presently in the component shops. A decision should then be made as to whether they should be scrapped, disposed of, or repaired as part of the overall spares inventory. Subsequent to this stock taking, a system should be implemented to track and control the flow of components through the shops (see Item 8 - PLANNING & PRODUCTION CONTROL).

During the shop visits, many items of test equipment were tagged "calibration not required". In many cases, these pieces of equipment would have to be calibrated prior to each use if valid results are to be obtained. This results in excessive amounts of time being wasted on calibration.

- It is recommended that ALO review and expand the equipment calibration program.

9. MAINTENANCE:

The ALO Aircraft Services department, which reports to the Manager, Maintenance, consists of the following maintenance crews: Cycle Check Crew; ALO Flight Line; Contract Flight Line; and Airplane Overhaul.

The Cycle Check Crew accomplishes the scheduled A, B and Quarter C checks. This crew works nights with a shift starting at 2100 hours. The airplanes fly only during the daytime and cycle checks are accomplished on several nights in a row during the week.

APPENDIX I

Attachment to
M-7360-87-3169
Page 19

The ALO Flight Line mechanics are responsible for preparing and turning around ALO airplanes at the Honolulu flight line. Their shift starts at 0645 hours.

The Contract Flight Line mechanics carry out all line maintenance activities on the airplanes belonging to ALO's contract customers. Several major United States and foreign operators have contracted their line maintenance at Honolulu to ALO. This group provides 24 hour coverage.

The Airplane Overhaul mechanics work a "Fall Project" every year accomplishing the D check blocks on several airplanes. This group is made up of mechanics who are borrowed from the other crews. Two shifts are worked during the day starting at 0645 and 1500 hours.

In addition to the above groups, an Aircraft Grooming department also reports to the Manager Maintenance. This department is responsible for the airplane exterior and interior cleaning and all ramp service personnel. Work accomplished by this department left a favorable impression on the team members, however, it is not intended to cover this department's activities in this report.

Of the four Aircraft Services maintenance groups, the Contract Flight Line and ALO Flight Line crews appeared to have the highest priority for taking the best, more experienced mechanics. This observation is supported by the fact that the ALO 737s achieve 99.6% mechanical dispatch reliability. Also, the team was informed that the contract customers are very satisfied with ALO's support. However, this success at the flight line seems to be achieved at the expense of the airplane hangar maintenance. It is difficult to keep a steady workforce on the scheduled check airplanes in the hangar when almost on a daily basis mechanics are reassigned to satisfy the more pressing needs of either ALO or Contract Flight Lines. As will be discussed in Item 16 - MANPOWER, ALO does not have sufficient manpower in the Aircraft Services department. As an example, the number of mechanics which ALO expected to assign to the cycle checks was six. This number is low to complete a B plus quarter C check in a reasonable amount of time, yet sometimes this number would be whittled down to as low as two mechanics as personnel were reassigned to support the flight line operations.

The team was impressed to learn that practically all mechanics (except for a few "old timers") possess A & P licenses. However, the team determined that in general most mechanics did not receive adequate training after joining Aircraft Maintenance. This aspect is not helped by the fact that almost two thirds of the ALO Aircraft Maintenance mechanics are relatively new, young personnel, whereas the rest consist of mechanics with over 20 years experience. The abundance of mechanics new to ALO and the lack of effective recurrent training for the older mechanics result in a workforce with an overall low skill level (this is addressed in Item 12 - TECHNICAL TRAINING).

APPENDIX I

The team members had the impression that there were instances of a lack of motivation and "esprit de corps" amongst the maintenance personnel. Our maintenance evaluations exclude analyses of employer/employee relations, however, the harmful effect on maintenance quality and performance cannot be ignored. The team assumes that ALO management is well aware of this situation and is addressing this problem. Improvement in employee satisfaction and work spirit would help to retain the highly qualified mechanics and attract new recruits.

Actual manhours expended to accomplish specific maintenance tasks are not recorded by ALO mechanics or inspectors. There were no work plans or flow charts for sequencing, prioritizing and distributing the scheduled work to be accomplished during a maintenance check. The maintenance supervisors knew what was going on, but visibility aids were not on display which could provide an effective means of monitoring check progress (see Item 7 - PLANNING & PRODUCTION CONTROL). A board with slots on which task cards could be grouped by aircraft zone, skills required and work progress status, would provide this needed visibility.

ALO keeps two separate deferred item logs for each airplane. One is the list of pilot write-ups that are deferred. The team was impressed that this list had no more than one or two items per airplane. The other deferred item log contains those items whose correction has been deferred until the next cycle (B plus Quarter C) check. As an example, there were 40 items on the deferred item list observed regarding airplane N73713 some of which had been outstanding for some months.

Storing and controlling the use of on-airplane maintenance tools and GSE were the responsibility of the spare parts store. A viable calibration control and monitoring system was not in existence (this was also discussed in Item 8 - SHOPS).

- It is recommended that there be better control and accountability of tools. It is desirable to have a separate tool crib area.

10. MAINTENANCE PROGRAM

The initial maintenance requirements for the 737 were established by the FAA 737 Maintenance Review Board (MRB) in 1967. At that time, the initial inspection and overhaul intervals were stated in flight hours based on 0.8 flight hours per flight as the average stage length. While this MRB permitted operators to develop a maintenance program compatible with their own basic maintenance requirements, it was envisaged that operators would use their methods of continuing analysis and surveillance to adjust these intervals based on their own experience and individual operating environment.

In general, this process seems to be working well to the desired effect amongst most operators. However, in ALO's case, as evident by the deteriorated condition of the high cycle 737s in the fleet,

the intent of this maintenance concept has not been met. This has resulted from such factors as the lack of a corrosion prevention and control program, the unusually high rate of flight cycles, the improper methods of structural sampling, some misinterpretation of the SSID program, incomplete reporting of significant structural deficiencies to the manufacturer, not accomplishing structural terminating action and incorrect listing of many components as "on condition".

ALO recognizes there are deficiencies with the present maintenance program and requested technical assistance from Boeing Customer Support in developing a 737 maintenance program applicable to ALO's current operation and environment.

The present ALO 737 maintenance check intervals (in flight hours) are:

A	B	C	D
150	750	3,000	15,000

Various maintenance program concepts based on calendar time intervals were discussed with ALO during this evaluation. One of those suggested included the concept of a five year structural inspection program with a yearly "C" check phased into four parts and accomplished in conjunction with the "B" check. The "A" check would be performed at approximately one quarter of the "B" check interval.

Another concept which was discussed suggested a yearly "C" check as a block including a quarter of a "D" check at the same time. In this scheme, the "D" check would be completed at the end of the fourth year, giving an effective "D" check interval of approximately 22,000 flight cycles, which is a realistic and acceptable interval. If two weeks were scheduled for each 737 airplane every year in order to accomplish the block "C" check plus quarter "D" check, it would take 20 weeks for the 10 airplane fleet. During the remaining 32 weeks when there would be no "C" plus quarter "D" check, an additional airplane could be interjected into revenue service. Maintenance schedules could be arranged to make the 32 weeks with an extra airplane coincide with ALO's peak passenger traffic season.

These conceptual programs are assumed to include an aggressive corrosion prevention and control program, incorporation of a 100% structural inspection program (that is, no sampling) and implementation of the Supplemental Structural Inspection Program. Sampling is not practical when the corrosion program is in place because it is easier to inspect the structure at the same time rather than keeping records of a sampling program.

It is desirable before any new maintenance program is implemented, that all ALO airplanes undergo a complete structural inspection, incorporate recommended extended life service bulletins, and carry out terminating structural action so that each airplane is in the best possible condition.

APPENDIX I

Attachment to
M-7360-87-3169
Page 22

11. SUPPLEMENTAL STRUCTURAL INSPECTION PROGRAM:

The Damage Tolerance Rating (DTR) check forms included in the 737 Supplemental Structural Inspection Document (SSID), D6-37089, are intended for use by operators to demonstrate compliance with the FAA Airworthiness Directive (AD) 84-21-06. Copies of completed ALO DTR check forms dated 9/10/87 were provided for review by the Boeing team.

- It is recommended that all ALO DTR check forms show the original date in 1984 when they were originally prepared and indicate the 9/10/87 date as a revision. The reason for this is that AD 84-21-06 required operators to incorporate the checks specified in the SSID into their maintenance program by November, 1985.

The ALO DTR check forms are well prepared (typed) and easy to follow. However, the paperwork used to record the scheduled, completed and deferred inspections and recording/reporting of discrepancies found is vague and subject to possible errors. The forms contained a number of errors ranging from typographical and misreading of the charts to complete misinterpretation of the notes and instructions provided in the SSID. In addition, there was some misuse of the available visual inspection methods defined in Section 3 of the SSID. For example, "General Visual" checks by mechanics during "A" checks were assumed equivalent to "Detailed" inspections. This implies that an inspector conducting an intensive visual inspection of a detail during an intermediate or major check has no more chance of detecting a fatigue crack than a mechanic has looking at the same detail during an "A" check. The DTR curve normally used to represent inspections by a mechanic during minor checks is identified as "GEN" (General Visual).

In some cases, special inspections are stipulated in the ALO DTR check forms that are over and above those required to meet the required DTR. For example, the use of more than one Nondestructive Inspection (NDI) method for an item when a single method is adequate. This again could be due to misinterpretation of the program requirements. The inspections defined by the DTR system are the minimum required to assure timely detection of fatigue damage in the 737 fleet, should it occur. It should be noted that some operators choose to inspect items more frequently than is needed to meet the required DTR. The reason for this is that the cost of the extra inspections is low compared to the cost of repairing extensive fatigue damage.

A list of errors and anomalies found during the review of the ALO DTR check forms was discussed with and left with ALO personnel (this list has been included in Appendix F). Corrections and alternative approaches were provided for some of the more significant errors that could be readily changed.

Attachment to
M-7360-87-3169
Page 23

The DTR check forms have been completed on an item-by-item basis with little or no cross-referencing made in terms of access requirements, insulation removal, etc. While this is acceptable, it is not the most economic program. Sheets are provided in the SSID showing the item numbers and DTR check forms in relation to inspection zones. These are intended as an aid to plan the program in terms of minimizing access requirements, insulation removal, etc. For example, the "best available" inspection program should be developed for the DTR check form in each inspection area requiring the most frequent access. This in turn determines the repeat access interval for all the other items and, with the appropriate inspection methods, will provide more than the required DTR.

The check intervals used to complete the ALO DTR check forms, the corresponding "typical" values used for the example program in the 737 SSID, and the current 737 fleet average values are as follows:

CHECK LEVEL	REPEAT CHECK INTERVAL IN FLIGHT CYCLES ALOHA	737 SSID	737 FLEET
A	500	250	160
B	2,100	---	630
C	8,100	3,000	2,970
D	40,500	24,000	20,500

As can be seen, the ALO intervals are much higher than the fleet average and the typical values used to develop the example program in the SSID. Consequently, it is difficult to achieve the required DTR within the existing regularly scheduled maintenance program for a number of items, and some special supplemental inspections (generally internal inspections and/or NDI) will be required.

Each completed DTR check form is included in the ALO Air Carrier Manual and is used as the basis for the inspection instructions. Each "inspection package" also includes the appropriate page from the SSID showing the general location of the Structural Significant Item (SSI) to be inspected. The final page(s) in each package includes instructions for access, clean-up, inspection and close-out. Each step requires a sign-off by a mechanic and for inspector. It was noted that this same procedure is used even when the existing maintenance program meets the required DTR. Although this is acceptable, it could possibly lead to some duplication of inspection instructions and effort. The inspection packages did not include any procedure or instructions for reporting discrepancies found, which are required as defined in Section 6 of the SSID.

Boeing will be providing assistance to completely restructure the ALO 737 maintenance program (some concepts are detailed in Item 10 - MAINTENANCE PROGRAM), including integration of the SSID requirements. Therefore, no extensive recommendations regarding the SSID program will be made in this report. However, until the new program becomes available, the following is recommended:

APPENDIX I

- Ensure that personnel responsible for planning, developing, checking, implementing and conducting the ALO SSID program, familiarize themselves with the guidelines, examples and procedures provided in the 737 SSID. Particular attention should be paid to the notes and instructions associated with the DTR check forms.

- Correct all existing DTR check forms errors and misinterpretations (listed in Appendix F). Note, there may be additional errors on the existing DTR check forms that are not listed in Appendix F.

- Add a procedure to the ALO Air Carrier Manual for reporting structural discrepancies in accordance with Section 6 of the SSID. Ensure that all cracks and previously unreported occurrences of significant corrosion involving a SSI that were detected during earlier SSID inspections be reported to Boeing.

12. TECHNICAL TRAINING:

Technical training is an important and distinct function of an airline's technical organization which provides for systematic development of personnel knowledge, ability and competence in maintaining the airworthiness of the airplanes, maintaining associated flight equipment, and ground support equipment. It is essential that technical personnel keep pace with the development of new and complex equipment as well as with the rapid changes in concepts and procedures applied to airplane maintenance. A well-planned technical training program is required to meet current and future needs. Training is an expensive investment, however, the lack of it can be even more expensive.

To ensure that the minimum standards are met and constantly maintained, it is necessary to periodically review the syllabus, innovate effective methods of examinations, rationally control the issue of competency licensing/approvals and maintain a system of mandatory recurrent training.

The adverse effects of lack of sufficient technical training are longer elapsed times to complete maintenance tasks and less effective trouble shooting. Personnel in component shops, hanger, line maintenance and outstations, lack sufficient technical trouble shooting knowledge and are not proficient in using various types of test equipment. This results in unnecessary removal of serviceable components and orders of repair parts which may not be required.

The high number of new hires within the last year in the ALO maintenance section and Technical Division management necessitates a thorough 737 technical training program. Emphasis should be placed to include familiarity with the Technical Policies & Procedures Manual. Recurrent or refresher courses are required for the experienced personnel. Management Development and leadership training would be beneficial to new supervision.

The present location of the Technical Training classrooms as part of the maintenance base is most convenient for conducting the practical "hands-on" aspects in the hangar and shops.

- It is recommended that plans be made to provide 737 training to all maintenance mechanics who have not yet received training for this model airplane.

- It is recommended that ALO adopt a policy requiring all technical personnel to receive a minimum of one week of refresher training each year. To be effective, this training program should require mandatory attendance, written testing and minimum test scores for completion of credit. Special emphasis or even extra training should be given to foremen and inspectors.

- It is recommended that management development and leadership training courses be given to all recently appointed supervision.

- It is recommended that cassettes on various specialized training aspects be acquired to be used in the hangar or the shops to assist with "on-the-job" training.

- It is recommended that specialized training courses be considered such as structural repair, corrosion prevention & control, rigging and nondestructive testing.

Training should not be inferred to mean formal classroom courses only. The effective exposure of key personnel may take the form of seminars, conferences, meetings, or even just a purposeful visit to an equivalent operator's facility. Such exposure also serves to broaden the person's outlook and makes the personnel appreciate the importance of control systems, procedures, feedback and communication.

13. COMPUTERIZATION:

Computer applications are being gradually introduced into the ALO Technical department. Each additional task that can be placed on the computer can help to increase productivity and create utilization improvements.

The team was informed that ALO has been using a computerized spare parts inventory control system for several years. This system uses the ALO mainframe computer. ALO's technical management appeared to be satisfied with this system.

Apart from this inventory control system, the only other venture into computerization by the technical department was in June, 1987 with the purchase of one module from the DASH software package (developed by a Canadian company). The DASH module currently being implemented is the "Rotable Parts Maintenance". During the team's visit, component history data was in the process of being entered into the computer.

APPENDIX I

The following recommendations are made:

- Consider the formulation of a master plan for the development of computerization in the technical division utilizing inputs from all potential users. Compatibility of the different user requirements should be reviewed as well as how they complement each other. The plan should contain the requirements and scheduled timing for each potential user group, the integration of each requirement into the overall plan with appropriate analyses and options (such as whether to continue with the DASH system or consider other software packages which may have more capability). The master plan should be periodically reviewed by top management and modified to reflect changing needs.

- By contacting other operators, a determination can be made of how and to what degree they have implemented the use of computers in their technical operations. Boeing Customer Support has in the past also assisted operators under contract in the planning and implementation of computerization.

As mentioned in Item 7 - PRODUCTION PLANNING & CONTROL, the entire component tracking and control system is a prime candidate for computerization. Although the team was not able to determine the full capabilities of the DASH system, the type of information that would be expected from an effective state-of-the-art computerized component data base would include: all relevant information for each component, including part number, serial number, nomenclature, total accumulated hours and cycles, shelf life, maintenance control process, on-aircraft inspection requirements for OC components, HT component removal and life limits, store issue data, installation and removal date, location within the component rotation cycle at any time, shop loadings and findings, manhours, modification status, interchangeability, and indication of in-house capability or repair agency. Such information is vital in performing a credible reliability analysis program and performance forecast. The system will also support shop work planning and scheduling, manpower planning, piece part and component inventory adjustment and budgeting and cost control.

When the team members wanted to check some technical records (such as service bulletin incorporation lists by individual airplane) the response received was that the requested data would not be available in the desired format until the system is computerized. The team feels that impending computerization is not sufficient reason for delaying the preparation of certain records manually. In the present situation, the required information regarding service bulletin incorporation on a specific ALO airplane could probably be extracted by the review of various different records but it would be a long and arduous process. Recognizing this, ALO had already begun to manually prepare an AD compliance list per airplane. The next step should be the preparation of service bulletin accomplishment lists for each airplane.

- It is recommended that certain technical records, such as service bulletin accomplishment on each airplane, be prepared manually. Initial priority should be given to recording the status of the structural service bulletins. These particular records should prove to be especially useful to ALO while operating several fleet leader high cycle airplanes and where airplanes are being added or removed from the fleet due to the various leasing arrangements.

14. TECHNICAL SUPPLY

The Technical Supply section is presently part of the same department as Production Planning. As shown in Item 3 - ORGANIZATION and Appendix E - PROPOSED ALO TECHNICAL ORGANIZATION, it is recommended that Technical Supply be a separate department reporting to the Staff Vice President, Maintenance & QA.

Significant progress has been made in the stores area in the last few months, but much further development remains to be accomplished.

The main stores area has been cleaned up and a cataloging and storage system implemented. A computerized inventory control program is used and a rotable parts maintenance module has recently been acquired as part of the DASH computer system (see Item 13 - COMPUTERIZATION). Stock levels appear to be adequate with very few complaints from the hangar floor.

Shipping and receiving is accomplished from the aisle-ways of the storeroom. On some days, this causes extreme congestion.

- It is recommended that ALO establish a separate area devoted exclusively to the shipping and receiving of parts.

Components which have been removed from the airplane are often sent directly to the applicable shop. It is desirable that these components be first sent to Stores where they should be placed in a quarantine area until it can be determined if the replacement part corrected the problem. If the replacement part does not solve the problem, the removed component can be tagged as serviceable and returned to stock.

Combustible flammable materials were intermixed with other parts in the storeroom despite a statement in the Aloha Carrier Manual, Section 3-46, "Storage of combustible flammable materials (for example, paint thinner solvents, lubricants, etc.) should be enclosed in airtight metal containers". This is a dangerous practice which could result in not only the loss of the storeroom and its contents, but possibly the hanger as well.

Tool storage appeared to be done in a haphazard manner throughout the storeroom and out on the hanger floor. This causes congestion and wasted time when a special tool must be located. It appeared that security and tool check-out procedures would be beneficial (a recommendation on a separate tool room is made in Item 9 - MAINTENANCE)

APPENDIX I

15. INDUSTRIAL SAFETY:

Airplane maintenance in hangars and shops brings together many disciplines of every trade and skill. This concentration of personnel, the limits of space in which they work, and the variety of activities, provide a real challenge to safe working practices. Safety directly affects operational efficiency and airplane dispatch. Not only do unsafe practices and conditions result in injuries to personnel and damage to equipment, but they also cause costly delays. Careful adherence to adopted safety standards and precautions will greatly reduce, or eliminate hazards present in shop, hangar and ramp areas and operations.

- It is recommended that the position of Safety Coordinator be assigned under the Quality Assurance department.

- It is recommended that the technical division employees be encouraged to take an interest in safety by forming an employee safety committee and appointing "safety monitors". They can conduct safety walk-through inspections, suggest new interest-arousing approaches and procedures, and act as a pipeline to handle safety suggestions from other employees. Membership of the safety committee should be rotated in order to get the maximum number of employees involved. Committee members could be given first aid, CPR and other special training to increase their value and also add to their feeling of involvement in the program. Once trained, some identification of their skill, such as a "first aid or CPR" sign above their work area, can alert personnel in an emergency situation.

A copy of Boeing's Accident and Fire Prevention manual (Appendix F) is to be supplied under separate cover.

16. MANPOWER:

Qualified, experienced, technical personnel are in high demand in the aviation industry, are costly to train and develop, they take long lead times to attain proficiency in their fields, but are less costly to retain than to replace with new recruits that must be trained and developed over long periods in order to regain a satisfactory state of productivity.

The wages, salaries and fringe benefits should be competitive with other operators and reflect the market values applicable to their skills. It is preferable for the technical personnel to stay in their same jobs and acquire the seasoning and expertise that come with time, experience, continuous practice and professional development.

Although Hawaii is a desirable place to spend a vacation, it is unfortunately a relatively expensive place to live. ALO has had difficulty in recruiting technical personnel. Some consideration was being given to initiating an apprentice training scheme. The team concurs that the creation of an apprenticeship program is an

The total number of ALO technical personnel (disregarding those associated with Technical Supply and utility services, for example, airplane cleaning) is about 165 or approximately 17 per airplane. A comparative study done a few years ago indicated that the average number of technical personnel for operators within the United States totals about 27 per airplane. The team's observations confirm the need for additional manpower at ALO in specific areas as discussed throughout this report. Also, additional personnel would be needed to implement the proposed reorganization as shown in Appendix E.

- It is recommended that an intensive effort be made to hire more personnel as needed in each department in the technical division. For all supervisory and management positions, it is desirable to assign suitable understudies who can be trained to assume the position of the applicable supervisor or manager in their absence.

17. COMMUNICATION:

With all the aforementioned factors in place, airworthiness and profitability now require the Organization to work in harmony and in unison both internally and externally, around the clock and around the network, in the air and on the ground. This is only possible with the establishment of an extensive and reliable communication network and the cultivation of proper communicative aptitude and attitude among staff.

The network should work when and as required and the subsequent interaction should convey the message in the right context and atmosphere. The communication norm should be that correct messages be conveyed on time, in the right manner, by the right means -- each time and every time, with acknowledgement.

On technical and operational matters, it is recommended that a very good rapport (with constant dialogue) exist between the Flight Operations and Technical divisions to make sure that each appreciates the other's problems and constraints, and highlight what the Technical Division is doing to find solutions. Flight Operations can provide valuable inputs on actual operating condition and technical defects. This in turn can contribute to more effective trouble shooting, timely rectification, minimizing delays, improving dispatch reliability and reducing costs. Above all, it should promote the camaraderie of the Technical Division and Flight Operations as partners in a complete team, to maintain and operate safe airplanes on the ground and in the air.

The same applies with the airplane, engine and component manufacturers. The channels of communication should be established, kept open and made available at any time. In this regard, Boeing is pleased to have our Field Service Representative located on site, and we welcome any requests for further information regarding this report, or other in-service problems, to be directed through his office.

APPENDIX J

FAA REPORT ON MULTIPLE SITE CRACKING, DECEMBER 18, 1986

DEPARTMENT OF TRANSPORTATION

FEDERAL AVIATION ADMINISTRATION

Northwest Mountain Region

Aircraft Certification Division

A Report on the Review of Large Transport Category
Airplane Manufacturers' Approach to Multiple Site Cracking
and the Safe Decompression Failure Mode

December 18, 1986

APPENDIX J

TABLE OF CONTENTS

I.	Purpose	3
II.	Introduction	4
III.	Review Team	6
IV.	The Review	7
V.	Summary	12
VI.	Conclusions	13
VII.	Recommendations	14

APPENDIX J

I. PURPOSE.

This report sets forth the conclusions and recommendations of a team whose purpose was to review the large transport category airplane manufacturers approach to Multiple Site Damage (MSD) and the safe decompression failure mode for the structures of their various models.

APPENDIX J

II. INTRODUCTION.

The present rules for the structural design of aircraft have evolved from successful experiences as well as from lessons learned in service. Most of the early propeller/reciprocating engine transport category airplanes were retired for reasons of technical obsolescence and hence for these airframes, geriatrics never became a structural integrity issue. Airframe integrity has been achieved with philosophies such as safe-life, fail-safe, and most recently, damage tolerance. In 1978 the Federal Aviation Administration (FAA) recognized the problems of geriatrics by requiring the preparation of a Continued Airworthiness Document/Supplemental Inspection Document (SID) to assure the structural integrity.

It has become a concern of the FAA that the initial geriatric assessments did not adequately consider Multiple Site Damage (MSD). Multiple Site Damage is defined as a condition which occurs after extended service use wherein a structure has sufficient cracking in adjacent or neighboring fastener holes to: (1) precipitate a net section yield failure mode; and/or (2) degrade its fail-safe capability.

The basic concern involving MSD is that current inspection programs are not oriented to interrogate the structure for the small cracks associated with one mode of MSD. This mode occurs when these small uninspectable cracks suddenly join together into a large critical crack. It may be impractical to find these small flaws (approximately 0.2 inch in length) on operational airplanes.

There is considerable evidence that MSD can and has developed in airplane structure. For example, a teardown inspection of the BAC 1-11 fatigue test article indicated a possible 100-inch strip of MSD. However, there are some anomalies, discussed later in this report, concerning this example. The DC-9 has had MSD occur in service at several locations, including the fuselage crown skin and aft pressure bulkheads. The catastrophic destruction of each of the A-300 fuselage fatigue test sections was attributed, at least in part, to MSD. Fatigue tests on the B-767 and B-747 aft pressure bulkheads exhibited patches of MSD as did the cockpit crown skin on the B-767. An MSD crack in the B-747 fuselage crown skin was found in service. This phenomenon has been observed also in wing structures. Multiple Site Damage in the lower surface of the KC-135 wing lowered the service life of that component from 18,000 to 8,500 hours. A teardown inspection of a 707-300 airplane with 13,600 flights revealed MSD in the lower wing splice stringers. The teardown inspection performed in the late seventies on the C-5A wing showed that fail-safety of this wing would have been significantly impaired by MSD at approximately 7500 flight hours. Many more examples would no doubt be evident if more teardown inspections had been performed.

The B-747 accident of August 12, 1985, gave cause for an additional concern. It was believed that cracking in the aft pressure bulkhead would lead to a controlled decompression failure mode. This, however, did not appear to happen. Subsequent crack growth and residual strength tests on B-747 and B-767 aft pressure domes indicated that the controlled decompression failure mode was not reliable. Since the supplemental inspection documents for some airplanes rely on controlled decompression, the validity of these documents was in question.

Based on the concerns expressed above, the Manager of the FAA Aircraft Certification Division (ANM-100) directed that a team be assembled to assess large transport category airplanes relative to their potential for MSD and their capability to accommodate controlled decompression. Recommendations for actions to maintain safety on operational airplanes were to be developed. The Manager of the Airframe Branch, Seattle Aircraft Certification Office (ANM-120S) was tasked with heading the team, conducting the review, and providing the appropriate recommendations.

APPENDIX J

III. REVIEW TEAM.

James W. Hart, Jr., Chairman	Manager, Airframe Branch, Seattle Aircraft Certification Office, Aircraft Certification Division, Federal Aviation Administration, Northwest Mountain Region
William Perrella	Supervisor, Airframe Branch, Seattle Aircraft Certification Office, Aircraft Certification Division, Federal Aviation Administration, Northwest Mountain Region
W. A. von Brockdorff	Manager, Airframe Branch, Long Beach Aircraft Certification Office, Aircraft Certification Division, Federal Aviation Administration, Northwest Mountain Region
Iven Connally	Aerospace Engineer, Regulations Branch, Transport Standards Staff, Aircraft Certification Division, Federal Aviation Administration, Northwest Mountain Region
Thomas Swift	National Resource Specialist - Fracture Mechanics/Metallurgy, Federal Aviation Administration
Dr. James W. Mar	Hunsaker Professor of Aerospace Education, Department of Aeronautics and Astronautics, Massachusetts Institute of Technology
Dr. John W. Lincoln	Structural Technical Expert - Aeronautical Systems Division/Engineering Flights Systems, Wright-Patterson Air Force Base
K. I. Leikach	Head for Tactical Aircraft, Structures - Naval Air Systems Command, Washington, D.C.

IV. THE REVIEW.

Multiple Site Damage is more acute for the fuselage of an airplane than for the wing because each flight applies approximately two-thirds of the limit pressurization condition, whereas the load cycles on the wing during each flight may be relatively benign. Thus, it appears that fuselages of the present transports will accumulate fatigue damage at a higher rate than will the wings. Accordingly, only the fuselage was assessed.

Letters were sent to Boeing, Douglas, and Lockheed citing the team's purpose and noting that a meeting with each manufacturer would be arranged. Similar letters were sent to the Civil Aviation Authority - United Kingdom (CAAUK), the French Direction Generale de l'Aviation Civile (DGAC), and the Dutch Rijksluchtvaartdienst (RLD). The letters stated that a team had been appointed to determine:

1. For the fuselage, including the pressure bulkheads, were inspection intervals under the supplemental structural inspection program predicated on cracks turning at tearstraps or frames?

   a. If inspections are predicated on cracks turning, what test data are available to show cracks will turn?

   b. If inspections are required, what are the details of the inspections?

2. What is the threshold for multiple site cracking and what data validates this threshold?

3. What inspections/actions are recommended to maintain safety for the multiple site cracking problem?

Transport category airplanes which exceed 75,000 pounds taxi weight and are in extensive use by the airline industry were reviewed. Those reviewed were:

BAC 1-11	DC-8	L-1011	B-737	B-767
BAe 146	DC-9	B-707	B-747	A-300
	DC-10	B-727	B-757	A-310

Discussions of the meetings with each manufacturer follow.

BAe 146 and BAC 1-11

The team met with Dr. John Bristow of the CAAUK to discuss the BAC 1-11 and the BAe 146. Dr. Bristow stated that neither the BAC 1-11 nor the BAe 146 considered controlled decompression of the structure as an obvious failure. Inspections of the structure are required to preclude catastrophic failure.

The BAe 146 is a relatively new airplane and fatigue tests are still in progress. The fatigue test articles will be cycled for at least two lifetimes of expected operational use. The BAe 146 will be viewed in light of the team's recommendations.

APPENDIX J

The BAC 1-11 fatigue test airplane was cycled for 114,000 flights. There was no teardown inspection of the test article and it was subsequently destroyed. A structural integrity audit was conducted on the BAC 1-11 to allow an increase beyond its life limit of 60,000 flights. The audit was based on an engineering assessment of an Allegheny Airlines airplane with 48,000 service cycles. A teardown inspection for MSD was performed. Multiple Site Damage was found in the critical fuselage longitudinal and circumferential splices as well as in the wing. It appeared that there may have been a 100-inch strip of MSD. However, MSD team members were concerned since there were several instances of multiple cracks extending from fastener holes. This cracking mode did not appear to be typical of fatigue but may have been caused by manufacturing problems. Portions of the fuselage skin were cut from the airframe and fatigue tested. Additional analyses were performed. The audit resulted in a new life limit of 85,000 flights and a supplemental inspection program for the airplanes beyond 60,000 flights. Should the 85,000 flight life limit be exceeded, the audit will have to be continued to support the safety of the BAC 1-11. Should the inspection program find MSD in the areas of concern, a further reassessment will be necessary to determine the next critical MSD areas.

DC-8, 9, and 10

None of the Douglas models depend on controlled decompression to announce a structural problem. Inspections of critical elements are necessary.

Douglas believes that MSD thresholds are in excess of current fleet cycles and operational lives. They base this belief on the vast number of pressure cycles accumulated on their full-scale fatigue test articles and the small amount of fatigue cracking found. Additionally, the longitudinal splices of the DC-10 are designed so the fatigue failures will be readily visible.

Douglas agrees that MSD is a potential problem. They believe that sufficient fatigue testing will provide assurance that MSD will not occur in the operational life of an airplane.

L-1011

Lockheed has not considered controlled decompression in their damage tolerant assessment of the L-1011.

Lockheed discussed the fatigue test program accomplished on the L-1011. They believe MSD thresholds are beyond lives demonstrated by component and full-scale tests. All critical parts have been subjected to tests to show adequate life. It is expected that skin cracks will appear at the first rivet attaching the fuselage skin to each frame on either side of each stringer, before MSD becomes a problem. This was demonstrated on a component test of the crown skin and stringers. Since there are thousands of these details in the fuselage, Lockheed expects that the costs to repair these cracks will force the retirement of the airplane and that MSD therefore will never be a problem. The L-1011 longitudinal splices have been designed and tested so that fatigue failures will occur in readily visible areas.

Lockheed believes that MSD is properly accounted for when sufficient fatigue tests are conducted to show that the airplane has acceptable fatigue characteristics throughout the expected life of the airplane.

Boeing Airplanes

Boeing's damage tolerant assessment considers the lead crack growing out of a fastener hole, secondary cracks out of the same fastener hole, and independent cracks at adjacent fastener holes.

Boeing has four categories for structures.

Category 1 - Secondary structure.
Category 2 - Structure that is malfunction evident if it cracks or fails.
Category 3 - Structure that requires an inspection program to maintain safety.
Category 4 - Safe life structure.

Boeing's position on MSD is that the current inspection program does account for the possibility of MSD. They strongly believe that MSD which could cause net section yielding problems will not be a problem because there will always be a lead crack that will be found by their current inspection program.

Boeing's supplemental inspection program for the pressure shell is based on cracks turning or gapping sufficiently to allow safe decompression (flapping - Boeing's Category 2 structure). Boeing has completed tests of a modified 747/767 aft pressure bulkhead design involving a reinforced center ring and the addition of heavy tear straps. These tests have demonstrated a fatigue life over three and a half times the design life goal, and controlled decompression for very large radial cracks in the lap splices. Structural inspection documents will be changed, or other action proposed, to require inspections for early airplanes with unmodified domes.

Based on the Boeing presentations, it is the concensus of the team that Boeing may not have included all of the significant aspects and scenarios of MSD in their damage tolerant assessments. The majority of the team believes that the data base is not sufficient to support the lead crack hypothesis.

A300-A310

Mr. Claude Frantzen of the French DGAC was contacted to determine if representatives of the DGAC could come to Seattle, Washington, to discuss the A300 and A310 airplanes relative to the team's efforts. Mr. Frantzen advised that a similar team had been created by the DGAC to conduct a similar review of the A300 and A310. He noted that an exchange of reports should give each Authority the data necessary to move forward on the problems of concern.

Team Discussions

It was noted that of the four manufacturers whose airplanes had been reviewed, only Boeing considers and accounts for controlled decompression in their supplemental structural inspection programs.

In reviewing the results of the initial discussions, the team determined that an additional understanding of the manufacturers' approach in dealing with MSD was necessary. Letters were sent to Boeing, Douglas, and Lockheed (information copies to CAAUK, the French DGAC, and the Dutch RLD) asking the following:

1. Inspections are a necessary ingredient in maintaining the health of the fleet. Inspection intervals are based on finding a lead crack before it reaches critical length. If MSD is present, it would appear that the critical crack size could be adversely affected resulting in the inspections being inadequate. Accordingly, how is this accounted for in the inspection programs for the pressure shell.

2. There may be cases where safety is maintained through controlled decompression. Should MSD be present in such areas or in bays adjacent to such areas, it would seem that MSD may adversely affect the safety of the airplane. Please comment on how this affects the airplanes in your fleet.

3. The team's concern with MSD cracking is that relatively equal length cracks propagating from a long row of fastener holes may not arrest should the cracks join. It is believed that the critical crack length for this mode is very small due to net section yielding between adjacent crack tips. It would follow that sophisticated Non Destructive Inspection (NDI) techniques would be required to find these small cracks. The team believes that these cracks may, in fact, be too small to have a sufficient probability of detection. Please advise the size of these cracks in the critical areas of the pressure shell.

The manufacturers' responses to the questions were as follows:

Question 1: Douglas does not expect lead crack residual strength to be affected by MSD. With the exception of a few cases, the large number of component and full-scale tests to lives well in excess of anticipated operational lives demonstrates that MSD thresholds are in excess of operational lives. Lockheed believes that MSD will not appear in the pressure shell until other obvious damage has been detected. This is based on low stress levels, good detail design, and the extensive test program conducted which substantiated this conclusion. Boeing believes their service and test evidence shows that MSD occurs nonuniformly with cracking in small groups of fastener holes. Their inspection programs are established to find cracking as it develops in these local areas.

Question 2: Both Douglas and Lockheed noted that the question was not applicable to them as they do not consider controlled decompression. Boeing believes that service experience and test evidence substantiated that MSD occurs in small noncontiguous areas. They account for what they consider realistic MSD in the evaluation of all structure expected to provide safety by controlled decompression.

Question 3: According to Douglas, in highly loaded areas MSD crack sizes would be small. They also believe that wide-spread, detailed inspections for MSD are not feasible, and for this reason they test components and full-scale articles far beyond the anticipated operational lives of the airplanes. Where MSD has occurred in service, NDI inspections have been recommended which will detect the cracks before they become a safety problem. Lockheed believes that the results of their test program show that MSD will not occur in the absence of prior detectable cracks. Their inspection program is based on finding these prior cracks rather than the MSD cracks. Boeing believes that a cracking scenario predicated on small, equal length cracks joining up to form a long crack is neither realistic nor probable. They believe it is probable

that local areas will have cracks of similar size which can and will join up to form a detectable crack. All MSD cracks of which they are aware support this belief. Inspection intervals are geared to this and cracks will be found long before the remaining fastener holes have reached their crack initiation lives.

APPENDIX J

V. SUMMARY.

Multiple Site Damage (MSD) is defined as a cracking phenomenon which may occur in structure along rows of fastener holes after extended service usage. These cracks may lead to a net section failure mode or degrade the structure's fail-safe capability. Because these cracks are visually undetectable, it may be possible to have a long string of these cracks join and cause a catastrophe before crack detection. It is, therefore, necessary to acquire test and service data to support the existence of this mode of MSD.

As indicated in this report, there are considerable differences in the manufacturers' approaches to address MSD in their aircraft. There appeared to be a concensus among the manufacturers that if their aircraft were flown long enough, there would be cracking at multiple sites; but not all agreed that this would constitute MSD as defined in this report. To restate the U.S. manufacturer's position; Boeing believes that the potential for MSD is already accounted for in their inspection program and a lead crack will always precede a condition where the structure will fail from net section yielding. Douglas believes that they design and test to ensure that MSD will not occur in the operational lifetime of their aircraft. Lockheed designs their aircraft so that detectable cracks precede the occurrence of MSD.

The team in their deliberations came to several generic conclusions regarding MSD and its potential for occurrence on large transport category aircraft. These are set forth in the conclusions portion of this report.

It is possible to design pressure structure to fail in a controlled manner and cause a controlled decompression rather than an explosive decompression. Some supplemental structural inspection programs are based on a controlled decompression announcing structural cracks rather than inspections. With the failure of the JAL B-747 aft pressure bulkhead, the likelihood of controlled decompression for that design of pressure bulkhead came under question. Neither British Aerospace, Douglas, nor Lockheed considered controlled decompression in developing the structural inspection programs for their airplanes; Boeing does take this factor into account.

VI. CONCLUSIONS.

The team had the following conclusions:

1. At this time the team sees no evidence that any of the aircraft included in the assessment are operating unsafely because of MSD. It is the judgement of the team that the aircraft have been designed to sound damage tolerance principles to ensure safe operation. The manufacturers aggressively pursued the development of inspection programs and have been responsive to modification needs.

2. The previous geriatric assessments may not have adequately considered the potential for MSD. Many of these assessments considered multiple cracking scenarios, but these were quite limited in scope. It appears that there may be some important cracking scenarios omitted that would lead to significant reductions in critical crack size and consequently affect inspection methods and intervals.

3. The structural integrity of older aircraft may in the future be impaired by net section yielding or degradation of fail-safety. The team has observed enough MSD in service and tests to feel confident that this condition is possible.

4. Assessment of MSD on a given aircraft should be based on tests or service experience interpreted through teardown inspections. If one examines the test data in the literature, there is considerable scatter in the statistical conclusions that may be drawn. Some of the data supports the Boeing claim that the detection of the lead crack will precede failure through MSD. Other data indicates that this approach could lead to an uninspectable MSD condition. Consequently, to make a meaningful statement about a particular model, one needs to examine test and teardown inspection data for that aircraft.

5. For all aircraft examined in this assessment, the existing data base is insufficient to determine the onset of MSD. This uncertainty should be reduced for the DC-9 when the teardown inspection data has been analyzed. However, for most of the other aircraft, the lack of good teardown inspection information is preventing a good evaluation for the onset of MSD.

6. Depending on detail design for fuselage skins as thick as .056 inches, Controlled Decompression (CD) is an acceptable failure mode for the cylindrical portions of Boeing's current fleet of airplanes, even in the presence of MSD.

APPENDIX J

VII. RECOMMENDATIONS.

The team has the following recommendations:

1. As suggested by CAAUK, Service Bulletin 51/A/PM/5830 should be made mandatory for all BAC 1-11 airplanes. If it appears a BAC 1-11 in service will exceed 85,000 flights, another structrual audit should take place. The responsible FAA Aircraft Certification Office (ACO) should follow through accordingly.

2. When the French DGAC reports become available on the A300 and A310, the responsible FAA ACO should review them in light of the recommendations set forth in this report and take action as appropriate.

3. The aft pressure domes on the Boeing airplanes, except for the B-767, were initially considered Category 2 structure. Tests indicate that this structure should be identified as Category 3. The responsible FAA ACO should require inspections to find the cracks before a severe problem is encountered.

4. Regarding MSD:

a. Each manufacturer should establish a data base to determine the threshold and severity of MSD by at least one of the following.

1. Extended fatigue tests beyond the anticipated service life by one lifetime accompanied by teardown inspections.

2. Teardown inspections of hightime service airplanes augmented by component tests, fatigue, and fracture analysis.

3. Other FAA-approved means.

b. From the data base each manufacturer should augment the inspection program as appropriate. He should also examine each case where controlled decompression is used for possible MSD effects.

c. The FAA should mandate the inspection programs.

5. Revise Advisory Circular (AC) 25.571-1A, to clarify that the damage tolerance assessment must be large enough in scope to account for the likely operational life of the airplane type. If the operational life exceeds the initial life assumption, it will be necessary for the manufacturer to suitably account for this fact.

•U.S. GOVERNMENT PRINTING OFFICE:1989-242-320:00016